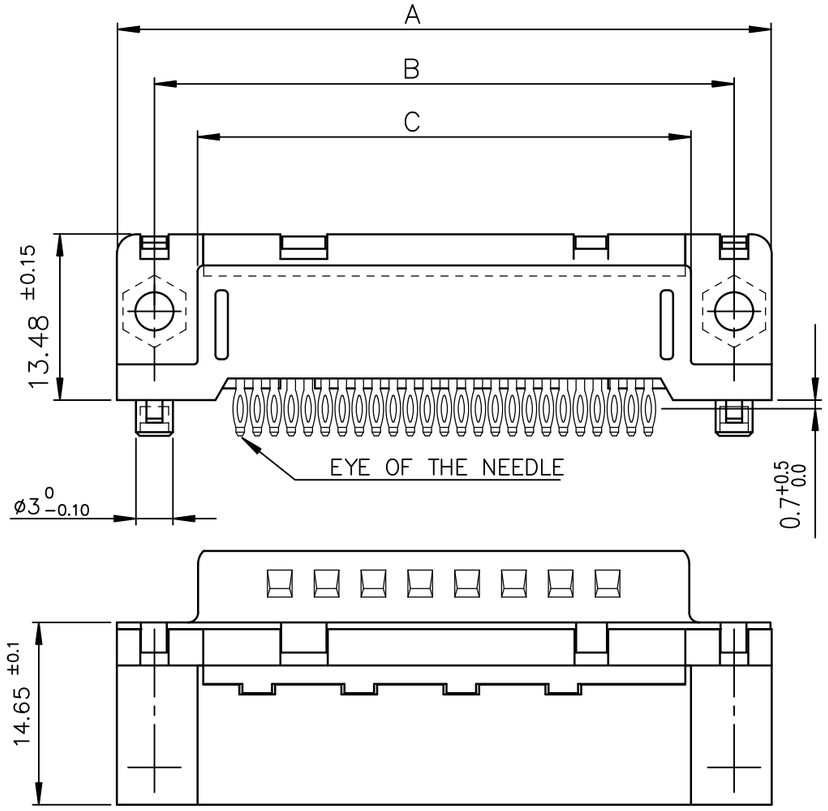

view shown without plastic pin and grounding

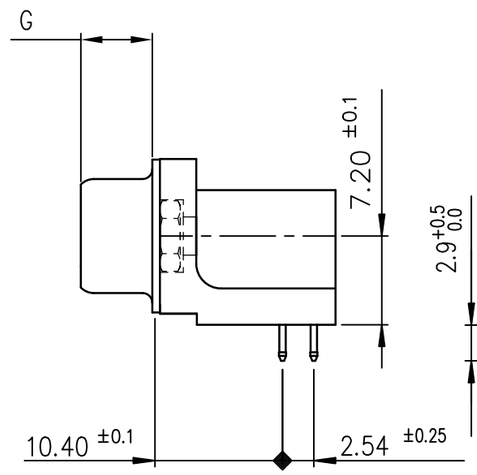

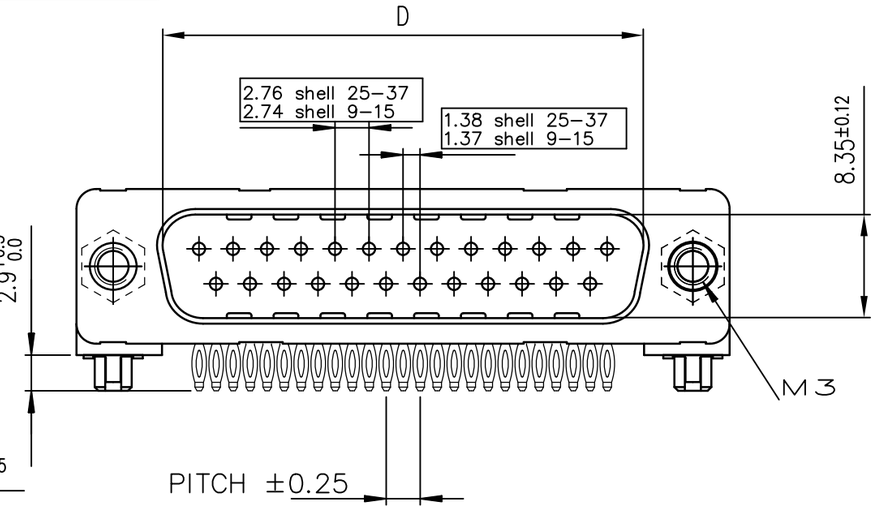

PC card drilling dimensions(after plating)

(thickness 1.60 ±0.20)

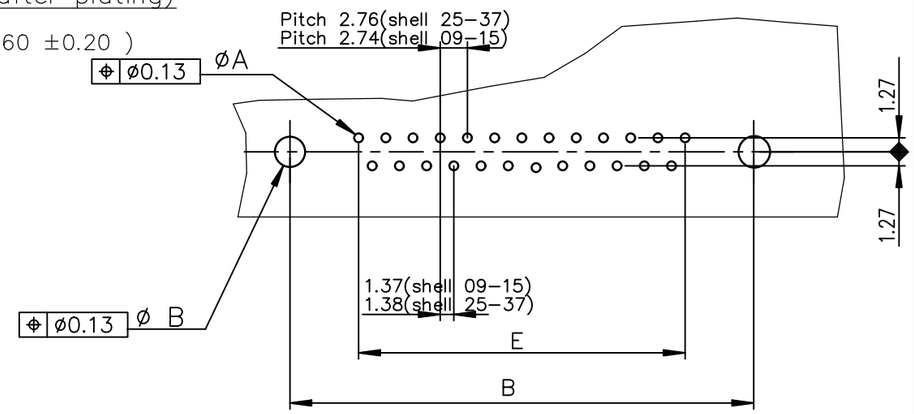

Detail of grounding strip

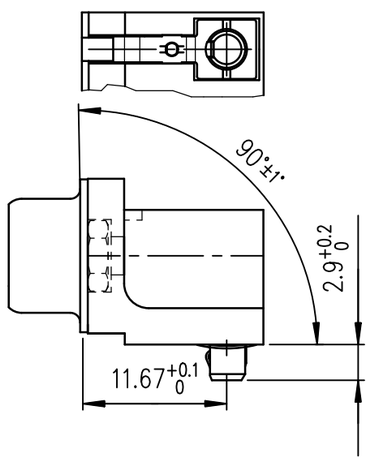

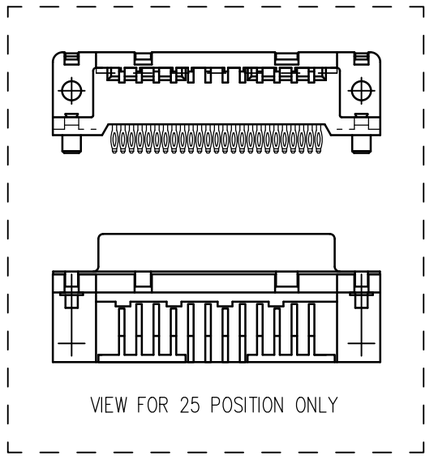

SHELL	A±0.38	B±0.12	C±0.10	D +0.25 0	E±0.07	G	LEAD FREE P/N	LEAD FREE P/N
09	30.81	24.99	18.00	16.79	10.96	5.90 +0.15 0	D09P81C4GL00LF	D09P81C6GL00LF
15	39.14	33.32	26.32	25.12	19.18	5.90 +0.15 0	D15P81C4GL00LF	D15P81C6GL00LF
25	53.03	47.04	40.04	38.84	33.12	5.70 +0.25 0	D25P81C4GL00LF	D25P81C6GL00LF
37	69.32	63.50	56.50	55.30	49.68	5.70 +0.25 0	D37P81C4GL00LF	D37P81C6GL00LF
							200 MATING CYCLES	500 MATING CYCLES

GENERAL CHARACTERISTICS AND ROHS INFORMATIONS:

SEE DRAWING C01–8646–0001

ltr	ecn no	dr	date
G	ELX-I-18050	MP	2014/06/23
H	ELX-I-33101	GM	2019-04-01
J	ELX-I-34612	GM	2019-20-08
K	ELX-I-281390	GM	2026-03-11

dr	PESSON	1996-12-06
engr	GREGAR M	2026-03-11
chr	GREGAR M	2026-03-11
appd	ALEX BABU	2026-03-11

mat'l. code: –

surface: ISO 1302

tolerance: ISO 406 ISO 1101

tolerances unless otherwise specified

angles: 0°±2°

linear: .0±.0.3 / .00±0.1 / .000±0.05

projection

MM

scale 2:1

product family: D–SUB

title: MALE CONNECTOR DELTA–D EUROPE RIGHT ANGLED PRESS FIT

dwg no: C01–8646–0521

sheet 1 of 1

size: A3

type: Product Customer Drawing

sheet index: revision K; sheet 1

form: A3-2016-02-24

© 2016 AFCI

Downloaded from Arrow.com.