TOSHIBA Intelligent Power Device High Voltage Monolithic Silicon Power IC

TPD4152F

The TPD4152F is a DC brushless motor driver using high-voltage PWM control. It is fabricated using a high-voltage SOI process. The device contains PWM circuit, 3-phase decode circuit, level shift high-side driver, low-side driver, IGBT outputs, FRDs, over-current and under-voltage protection circuits, and a thermal shutdown circuit. It is easy to control a DC brush less motor by applying a signal from a motor controller and a Hall amp/ Hall IC to the TPD4152F.

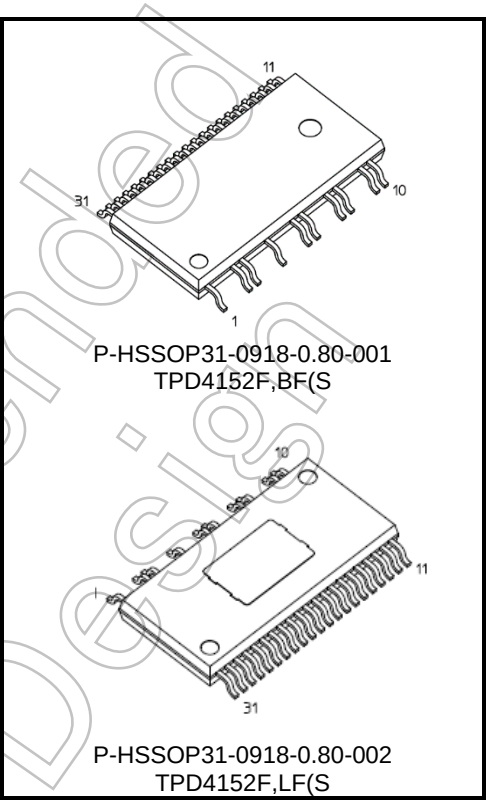

Weight: 0.7 g (typ.)

Features

- High voltage power side and low voltage signal side terminal are separated.
- Bootstrap circuits give simple high-side supply.
- Bootstrap diodes are built in.
- PWM and 3-phase decode circuit are built in.
- Outputs Rotation pulse signals.
- 3-phase bridge output using IGBTs.
- FRDs are built in.
- Included over-current and under-voltage protection, and thermal shutdown.
- Package: 31-pin HSSOP.
- Compatible with Hall amp input and Hall IC input.

This product has a MOS structure and is sensitive to electrostatic discharge. When handling this product, ensure that the environment is protected against electrostatic dischare.

Not Recommended for New Design

Start of commercial production
2016-03

Downloaded from Arrow.com.

Pin Assignment (top view)

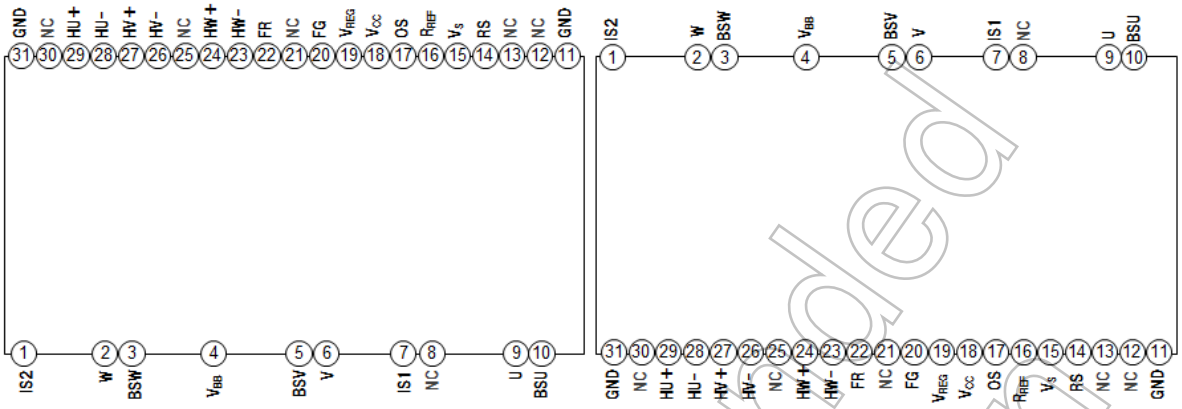

TPD4152F,BF(S TPD4152F,LF(S

Marking

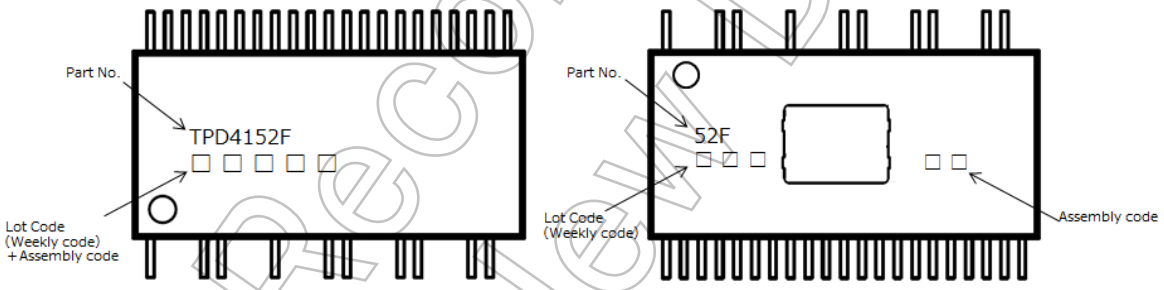

TPD4152F,BF(S TPD4152F,LF(S

Not Recommended for New Design

Downloaded from Arrow.com.

Block Diagram

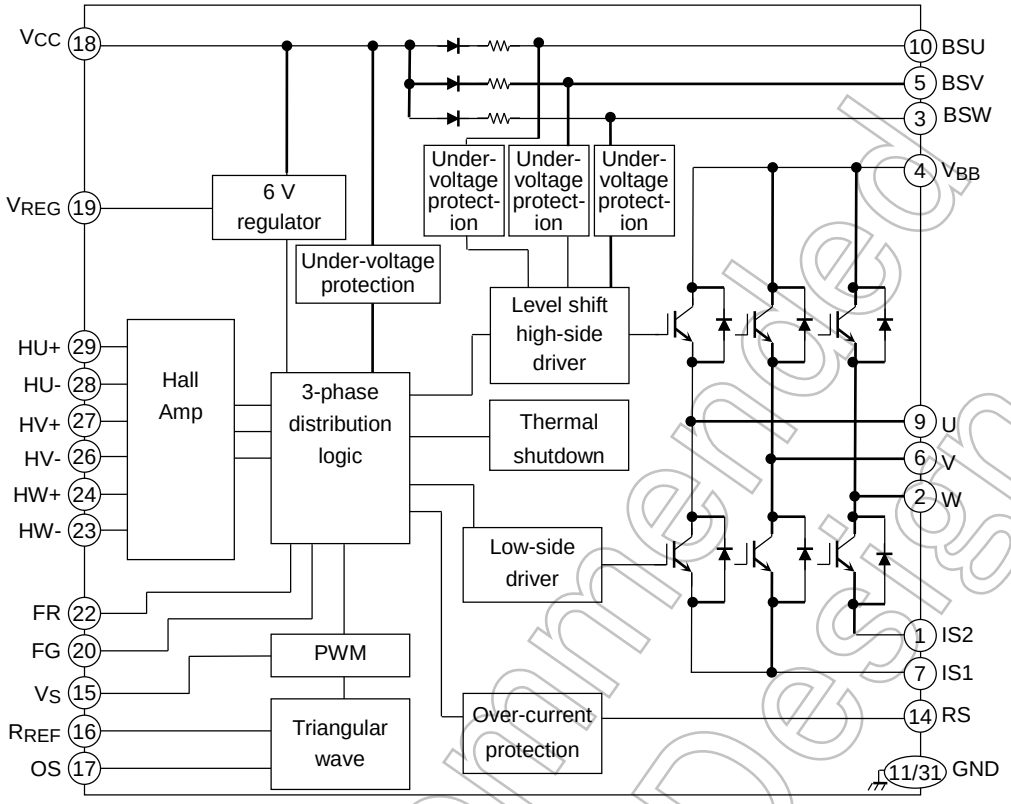

Not Recommended for New Design

Downloaded from Arrow.com.

Pin Description

Pin No.	Symbol	Pin Description
1	IS2	IGBT emitter/FRD anode pin.
2	W	W-phase output pin.
3	BSW	W-phase bootstrap capacitor connecting pin.
4	V_{BB}	High-voltage power supply input pin.
5	BSV	V-phase bootstrap capacitor connecting pin.
6	V	V-phase output pin.
7	IS1	IGBT emitter/FRD anode pin.
8	NC	Unused pin, which is not connected to the chip internally.
9	U	U-phase output pin.
10	BSU	U-phase bootstrap capacitor connecting pin.
11	GND	Ground pin.
12	NC	Unused pin, which is not connected to the chip internally.
13	NC	Unused pin, which is not connected to the chip internally.
14	RS	Over current detection pin.
15	V_S	Speed control signal input pin. (PWM reference voltage input pin.)
16	R_{REF}	PWM triangular wave oscillation frequency setup pin. (Connect a resistor to this pin.)
17	OS	PWM triangular wave oscillation frequency setup pin. (Connect a capacitor to this pin.)
18	V_{CC}	Control power supply pin.
19	V_{REG}	6 V regulator output pin.
20	FG	Rotation pulse output pin.
21	NC	Unused pin, which is not connected to the chip internally.
22	FR	Forward/Reverse selection pin.
23	HW-	W-phase Hall amp signal input pin. (Hall IC can be used.)
24	HW+	W-phase Hall amp signal input pin. (Hall IC can be used.)
25	NC	Unused pin, which is not connected to the chip internally.
26	HV-	V-phase Hall amp signal input pin. (Hall IC can be used.)
27	HV+	V-phase Hall amp signal input pin. (Hall IC can be used.)
28	HU-	U-phase Hall amp signal input pin. (Hall IC can be used.)
29	HU+	U-phase Hall amp signal input pin. (Hall IC can be used.)
30	NC	Unused pin, which is not connected to the chip internally.
31	GND	Ground pin.

Not Recommended for New Design

Downloaded from Arrow.com.

Internal circuit diagrams

Internal circuit diagram of HU+, HU-, HV+, HV-, HW+, HW- input pins

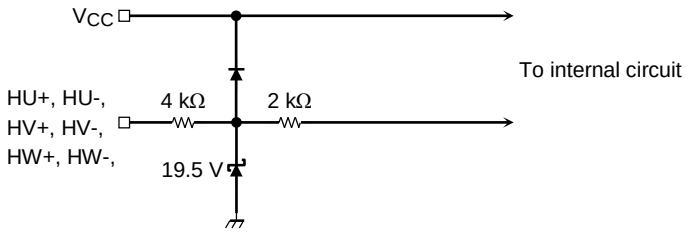

Internal circuit diagram of Vs pin

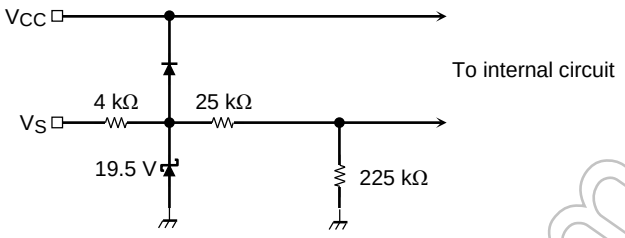

Internal circuit diagram of FG pin

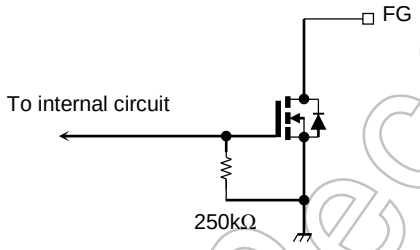

Internal circuit diagram of RS pin

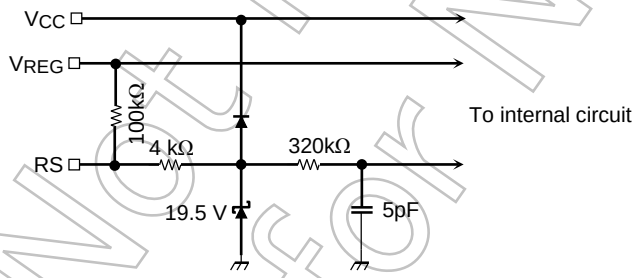

Internal circuit diagram of FR pin

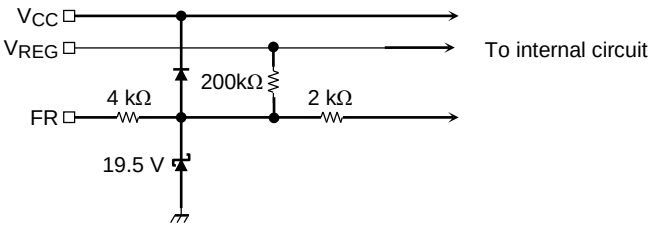

Not Recommended for New Design

Downloaded from Arrow.com.

Timing Chart

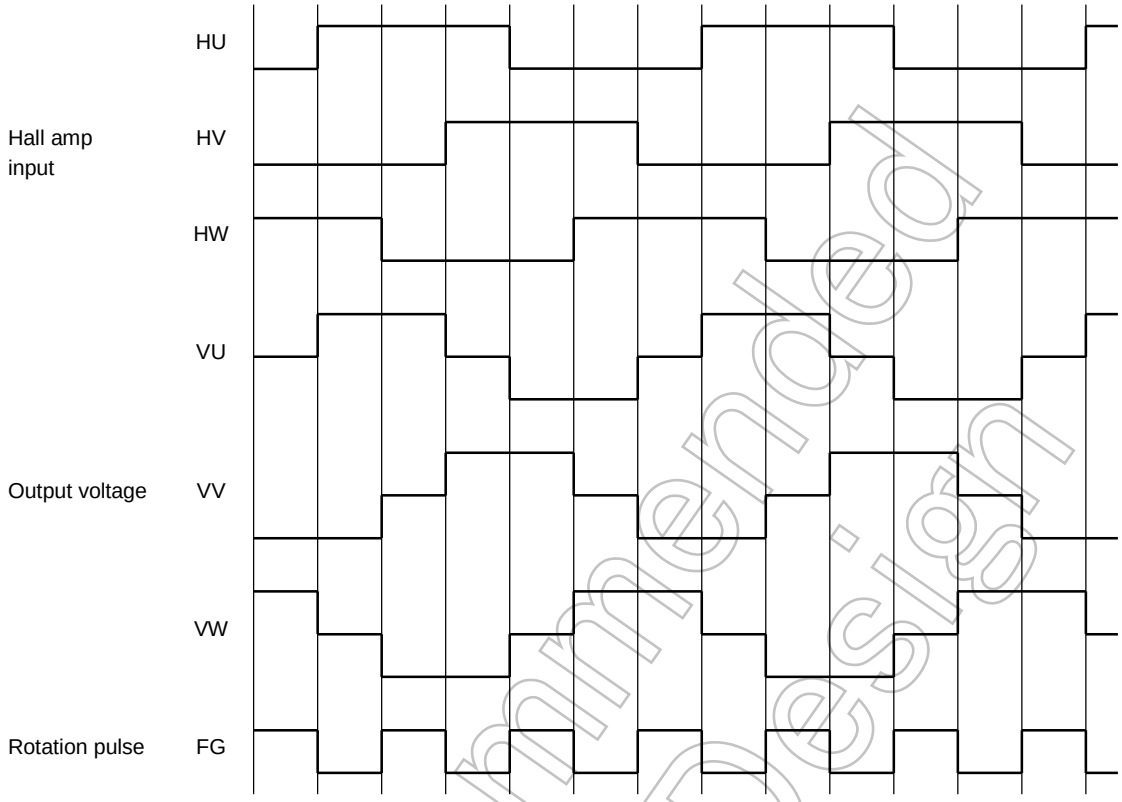

Note: Hall amp input logic high (H) refers to H*+>H*-. (*: U/V/W)

Truth Table

FR	Hall amp Input			U Phase		V Phase		W Phase		FG
	HU	HV	HW	High side	Low side	High side	Low side	High side	Low side	
H	H	L	H	ON	OFF	OFF	ON	OFF	OFF	L
H	H	L	L	ON	OFF	OFF	OFF	OFF	ON	H
H	H	H	L	OFF	OFF	ON	OFF	OFF	ON	L
H	L	H	L	OFF	ON	ON	OFF	OFF	OFF	H
H	L	H	H	OFF	ON	OFF	OFF	ON	OFF	L
H	L	L	H	OFF	OFF	OFF	ON	ON	OFF	H
H	L	L	L	OFF	OFF	OFF	OFF	OFF	OFF	L
H	H	H	H	OFF	OFF	OFF	OFF	OFF	OFF	L
L	H	L	H	OFF	ON	ON	OFF	OFF	OFF	H
L	H	L	L	OFF	ON	OFF	OFF	ON	OFF	L
L	H	H	L	OFF	OFF	OFF	ON	ON	OFF	H
L	L	H	L	ON	OFF	OFF	ON	OFF	OFF	L
L	L	H	H	ON	OFF	OFF	OFF	OFF	ON	H
L	L	L	H	OFF	OFF	ON	OFF	OFF	ON	L
L	L	L	L	OFF	OFF	OFF	OFF	OFF	OFF	L
L	H	H	H	OFF	OFF	OFF	OFF	OFF	OFF	L

Note: Hall amp input logic high (H) refers to H*+>H*-. (*: U/V/W)

Not Recommended for New Design

Downloaded from Arrow.com.

Absolute Maximum Ratings (Ta = 25°C)

Characteristics	Symbol	Rating	Unit
Power supply voltage	V_{BB}	600	V
	V_{CC}	20	V
Output current (DC)	I_{out}	0.7	A
Output current (pulse)	I_{outp}	1.5	A
Input voltage (except V_S)	V_{IN}	-0.5 to V_{REG} + 0.5	V
Input voltage (only V_S)	VV_S	8.2	V
V_{REG} current	I_{REG}	50	mA
FG voltage	V_{FG}	20	V
FG current	I_{FG}	20	mA
Power dissipation (Tc = 25°C)	P_C	23	W
Operating junction temperature	T_{jopr}	-40 to 135	°C
Junction temperature	T_j	150	°C
Storage temperature	T_{stg}	-55 to 150	°C

Note: Using continuously under heavy loads (e.g. the application of high temperature/current/voltage and the significant change in temperature, etc.) may cause this product to decrease in the reliability significantly even if the operating conditions (i.e. operating temperature/current/voltage, etc.) are within the absolute maximum ratings and the operating ranges.
Please design the appropriate reliability upon reviewing the Toshiba Semiconductor Reliability Handbook ("Handling Precautions"/"Derating Concept and Methods") and individual reliability data (i.e. reliability test report and estimated failure rate, etc).

Not Recommended for New Design

Downloaded from Arrow.com.

Electrical Characteristics (Ta = 25°C)

Characteristics	Symbol	Test Condition	Min	Typ.	Max	Unit
Operating power supply voltage	V_{BB}	—	50	280	450	V
	V_{CC}	—	13.5	15	17.5	
Current dissipation	I_{BB}	V_{BB} = 450 V Duty cycle = 0 %	—	—	0.5	mA
	I_{CC}	V_{CC} = 15 V Duty cycle = 0 %	—	2.3	10	
	$I_{BS\ (ON)}$	V_{BS} = 15 V, high side ON	—	230	470	μA
	$I_{BS\ (OFF)}$	V_{BS} = 15 V, high side OFF	—	210	415	
Hall amp input sensitivity	VHSENS(HA)	—	50	—	—	mV_{p-p}
Hall amp input current	IHB(HA)	—	-2	0	2	μA
Hall amp common input voltage	CMV_{IN}(HA)	—	0	—	8	V
Hall amp hysteresis width	ΔV_{IN}(HA)	—	8	30	62	mV
Hall amp input voltage L→H	VLH(HA)	—	4	15	31	
Hall amp input voltage H→L	VHL(HA)	—	-31	-15	-4	
Output saturation voltage	$V_{CEsat}H$	V_{CC} = 15 V, I_C = 0.5 A, high side	—	2.2	3.0	V
	$V_{CEsat}L$	V_{CC} = 15 V, I_C = 0.5 A, low side	—	2.2	3.0	
FRD forward voltage	$V_F H$	I_F = 0.5 A, high side	—	2.5	3.2	V
	$V_F L$	I_F = 0.5 A, low side	—	2.5	3.2	
BSD forward voltage	$V_{F\ (BSD)}$	I_F = 500 μA	—	1.0	1.2	V
PWM ON-duty cycle	PWMMIN	—	0	—	—	%
	PWMMAX	—	—	—	100	
PWM ON-duty cycle, 0 %	VV_S0 %	PWM = 0 %	1.7	2.1	2.5	V
PWM ON-duty cycle, 100 %	VV_S100 %	PWM = 100 %	4.9	5.4	6.1	V
PWM ON-duty voltage range	VV_SW	VV_S100 % − VV_S0 %	2.8	3.3	3.8	V
Output all-OFF voltage	VV_SOFF	Output all OFF	1.1	1.3	1.5	V
Regulator voltage	V_{REG}	V_{CC} = 15 V, I_{REG} = 30 mA	5	6	7	V
Speed control voltage range	V_S	—	0	—	6.5	V
FG output saturation voltage	V_{FGsat}	V_{CC} = 15 V, I_{FG} = 5 mA	—	—	0.5	V
Current control voltage	V_R	—	0.46	0.5	0.54	V
Current control delay time	Dt	—	—	4.5	6.5	μs
Thermal shutdown temperature	TSD	—	135	—	185	°C
Thermal shutdown hysteresis	ΔTSD	—	—	50	—	°C
V_{CC} under-voltage protection	$V_{CC}UVD$	—	10	11	12	V
V_{CC} under-voltage protection recovery	$V_{CC}UVR$	—	10.5	11.5	12.5	V
V_{BS} under-voltage protection	$V_{BS}UVD$	—	9	10	11	V
V_{BS} under-voltage protection recovery	$V_{BS}UVR$	—	9.5	10.5	11.5	V
Refresh operating ON voltage	T_{RFON}	Refresh operation ON	1.1	1.3	1.5	V
Refresh operating OFF voltage	T_{RFOFF}	Refresh operation OFF	3.1	3.8	4.6	V
Triangular wave frequency	f_c	R = 27 kΩ, C = 1000 pF	16.5	20	25	kHz
Output-on delay time	t_{on}	V_{BB} = 280 V, V_{CC} = 15 V, I_C = 0.5 A	—	2.1	3.5	μs
Output-off delay time	t_{off}	V_{BB} = 280 V, V_{CC} = 15 V, I_C = 0.5 A	—	1.7	3.0	μs
FRD reverse recovery time	t_{rr}	V_{BB} = 280 V, V_{CC} = 15 V, I_C = 0.5 A	—	200	—	ns

Not Recommended for New Design

Downloaded from Arrow.com.

Application Circuit Example

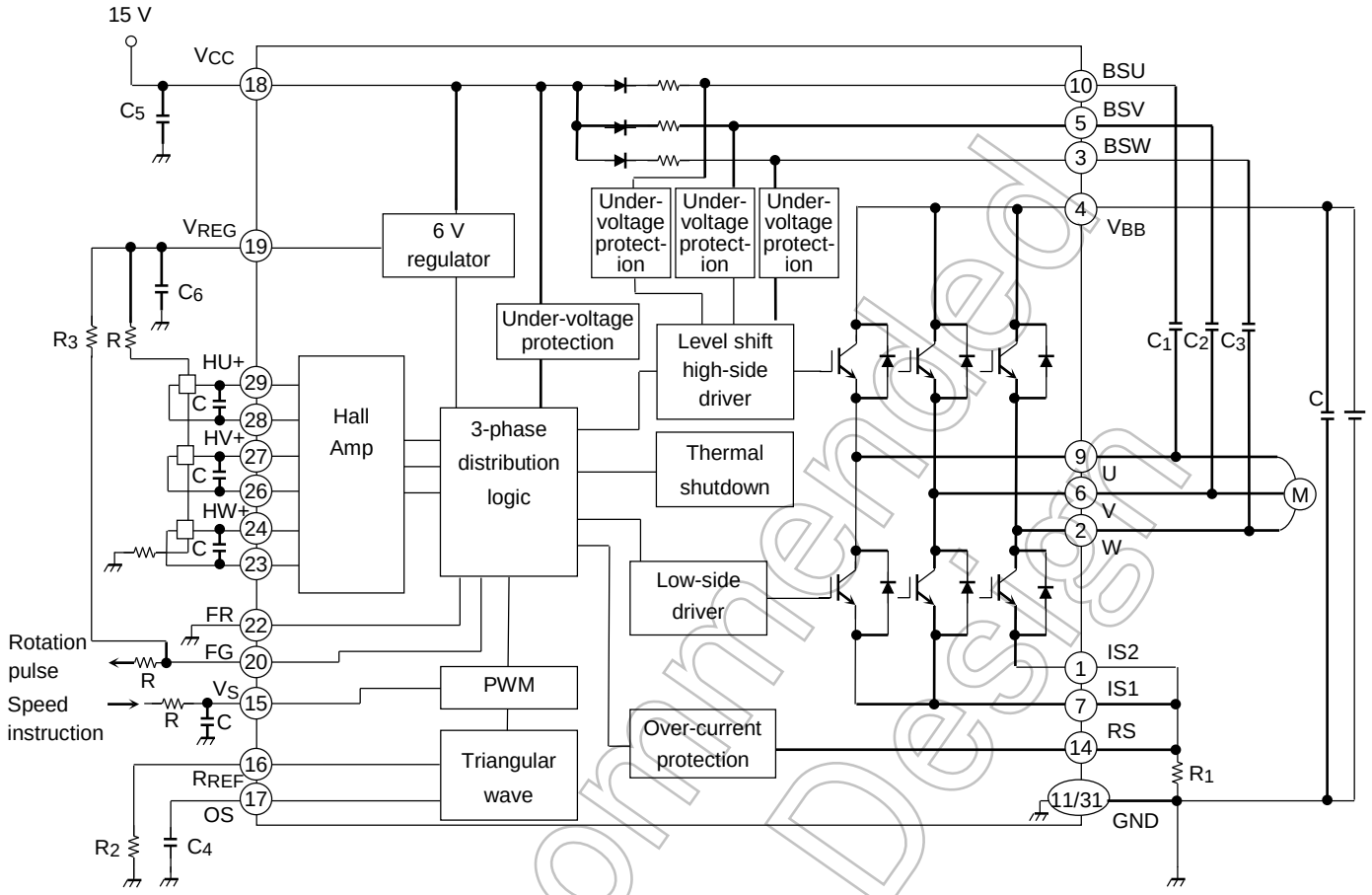

Not Recommended for New Design

Downloaded from Arrow.com.

External Parts

Typical external parts are shown in the following table.

Part	Typical	Purpose	Remarks
C_1, C_2, C_3	25 V/2.2 μF	Bootstrap capacitor	(Note 1)
R_1	0.8 Ω ± 1 % (1 W)	Current detection	(Note 2)
C_4	25 V/1000 pF ± 5 %	PWM frequency setup	(Note 3)
R_2	27 kΩ ± 5 %	PWM frequency setup	(Note 3)
C_5	25 V/10 μF	Control power supply stability	(Note 4)
C_6	25 V/0.1 μF	V_{REG} power supply stability	(Note 4)
R_3	5.1 kΩ	FG pin pull-up resistor	(Note 5)

Note 1: The required bootstrap capacitance value varies according to the motor drive conditions. Although the IC can operate at above the V_{BS} undervoltage level, it is however recommended that the capacitor voltage be greater than or equal to 13.5 V to keep the power dissipation small. The capacitor is biased by V_{CC} and must be sufficiently derated accordingly.

Note 2: The following formula shows the detection current: $I_O = V_R \div R_1$ at V_R = 0.5 V (typ.)
Do not exceed a detection current of 0.7 A when using the IC.

Note 3: With the combination of C_4 and R_2 shown in the table, the PWM frequency is around 20 kHz. The IC intrinsic error factor is around 10 %.
The PWM frequency is broadly expressed by the following formula. (In this case, the stray capacitance of the printed circuit board needs to be considered.)
$f_c = 0.65 \div \{ C_4 \times (R_2 + 4.25\ k\Omega)\}$ [Hz]
R_2 creates the reference current of the PWM triangular wave charge/discharge circuit. If R_2 is set too small it exceeds the current capacity of the IC internal circuits and the triangular wave distorts. Set R_2 to at least 9 kΩ.

Note 4: When using the IC, adjustment is required in accordance with the use environment. When mounting, place as close to the base of the IC leads as possible to improve noise elimination.

Note 5: The FG pin is open drain. If the FG pin is not used, connect to the GND.

Note : If noise is detected on the Input signal pin, add a capacitor between inputs.

Note : A Hall device should use an indium antimony system. It recommend that the peak Hall device voltage should set more than 300mV.

Not Recommended for New Design

Downloaded from Arrow.com.

Handling precautions

(1) When switching the power supply to the circuit on/off, ensure that V_S < VV_SOFF (all IGBT outputs off). At that time, either the V_{CC} or the V_{BB} can be turned on/off first. Note that if the power supply is switched off as described above, the IC may be destroyed if the current regeneration route to the V_{BB} power supply is blocked when the V_{BB} line is disconnected by a relay or similar while the motor is still running.

(2) The IC has a forward/reverse rotation control pin (FR). To change the rotation direction, switch the FR pin after the motor is stopped in the state that the V_S voltage is lower than or equal to 1.1 V. When the FR pin is switched while the motor is rotating, the following malfunctions may occur.
A shoot-through current may flow between the upper arm and lower arm in the output stage (IGBT) at that moment when the motor is switched.
An over current may flow into the area where the over current protection circuit cannot detect it.

(3) The triangular wave oscillator circuit, with externally connected C_4 and R_2, charges and discharges minute amounts of current. Therefore, subjecting the IC to noise when mounting it on the board may distort the triangular wave or cause malfunction. To avoid this, attach external parts to the base of the IC leads or isolate them from any tracks or wiring which carries large current.

(4) The PWM of this IC is controlled by the on/off state of the high-side IGBT.

(5) If a motor is locked where V_{BB} voltage is low and duty is 100 %, it may not be possible to reboot after the load is released as a result of the high side being ON immediately prior to the motor being locked. This is because, over time, the bootstrap voltage falls, the high-side voltage decrease protection operates and the high-side output becomes OFF. In this case, since the level shift pulse necessary to turn the high side ON cannot be generated, reboot is not possible. A level shift pulse is generated by either the edge of a Hall sensor output or the edge of an internal PWM signal, but neither edge is available due to the motor lock and duty 100 % command. In order to reboot after a lock, the high-side power voltage must return to a level 0.5 V (typ.) higher than the voltage decrease protection level, and a high-side input signal must be introduced. As a high-side input signal is created by the aforementioned level shift pulse, it is possible to reboot by reducing PWM duty to less than 100 % or by forcing the motor to turn externally and creating an edge at a Hall sensor output. In order to ensure reboot after a system lock, the motor specification must be such that maximum duty is less than 100 %.

Not Recommended for New Design

Downloaded from Arrow.com.

Description of Protection Function

(1) Over-current protection

The IC incorporates an over-current protection circuit to protect itself against over current at startup or when a motor is locked. This protection function detects voltage generated in the current-detection resistor connected to the RS pin. When this voltage exceeds V_R = 0.5 V (typ.), the high-side IGBT output, which is on, temporarily shuts down after a delay time, preventing any additional current from flowing to the IC. The next PWM ON signal releases the shutdown state.

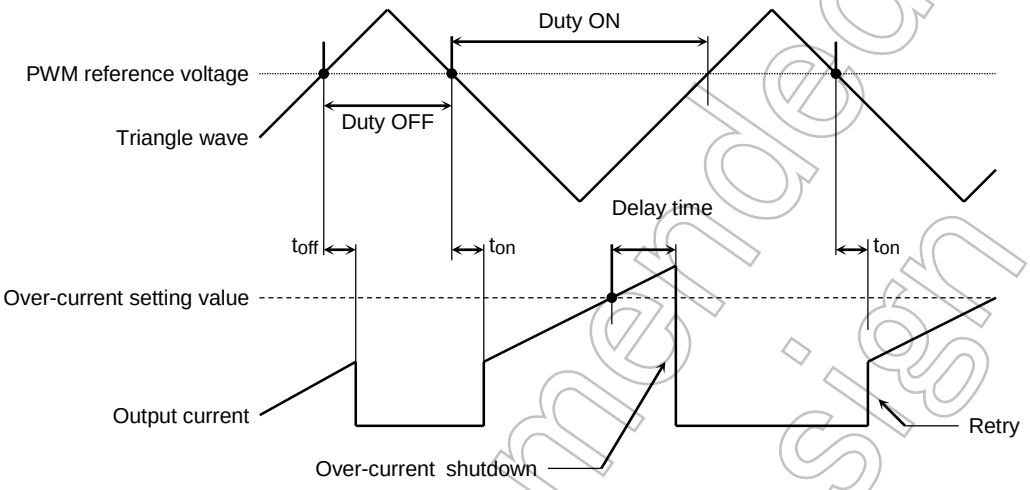

(2) Under-voltage protection

The IC incorporates under-voltage protection circuits to prevent the IGBT from operating in unsaturated mode when the V_{CC} voltage or the V_{BS} voltage drops.

When the V_{CC} power supply falls to the IC internal setting $V_{CC}UVD$ = 11 V (typ.), all IGBT outputs shut down regardless of the input. This protection function has hysteresis. When the V_{CC} power supply reaches 0.5 V higher than the shutdown voltage $V_{CC}UVR$ = 11.5 V (typ.), the IC is automatically restored and the IGBT is turned on/off again by the input.

When the V_{BS} supply voltage drops $V_{BS}UVD$ = 10 V (typ.), the high-side IGBT output shuts down. When the V_{BS} supply voltage reaches 0.5 V higher than the shutdown voltage $V_{BS}UVR$ = 10.5 V (typ.). the IGBT is turned on/off again by the input signal.

(3) Thermal shutdown

The IC incorporates a thermal shutdown circuit to protect itself against excessive rise in temperature. When the temperature of this chip rises to the internal setting TSD due to external causes or internal heat generation, all IGBT outputs shut down regardless of the input. This protection function has hysteresis ΔTSD = 50 °C (typ.). When the chip temperature falls to TSD − ΔTSD, the chip is automatically restored and the IGBT is turned on/off again by the input.

Because the chip contains just one temperature-detection location, when the chip heats up due to the IGBT for example, the distance between the detection location and the IGBT (the source of the heat) can cause differences in the time taken for shutdown to occur. Therefore, the temperature of the chip may rise higher than the initial thermal shutdown temperature.

Not Recommended for New Design

Downloaded from Arrow.com.

Description of Bootstrap Capacitor Charging and Its Capacitance

The IC uses bootstrapping for the power supply for high-side drivers.
The bootstrap capacitor is charged by turning on the low-side IGBT of the same arm (approximately 1/5 of PWM cycle) while the high-side IGBT controlled by PWM is off. (For example, to drive at 20 kHz, it takes approximately 10 μs per cycle to charge the capacitor.) When the V_S voltage exceeds 3.8 V (55 % duty), the low-side IGBT is continuously in the off state. This is because when the PWM on-duty becomes larger, the arm is short-circuited while the low-side IGBT is on. Even in this state, because PWM control is being performed on the high-side IGBT, the regenerative current of the diode flows to the low-side FRD of the same arm, and the bootstrap capacitor is charged. Note that when the on-duty is 100 %, diode regenerative current does not flow; thus, the bootstrap capacitor is not charged.
When driving a motor at 100 % duty cycle, take the voltage drop at 100 % duty (see the figure below) into consideration to determine the capacitance of the bootstrap capacitor.

Capacitance of the bootstrap capacitor = Current dissipation (max) of the high-side driver × Maximum drive time /(V_{CC} − $V_{F\,(BSD)}$ + $V_{F\,(FRD)}$ − 13.5) [F]

$V_{F\,(BSD)}$: Bootstrap diode forward voltage

$V_{F\,(FRD)}$: First recovery diode forward voltage

Consideration must be made for aging and temperature change of the capacitor.

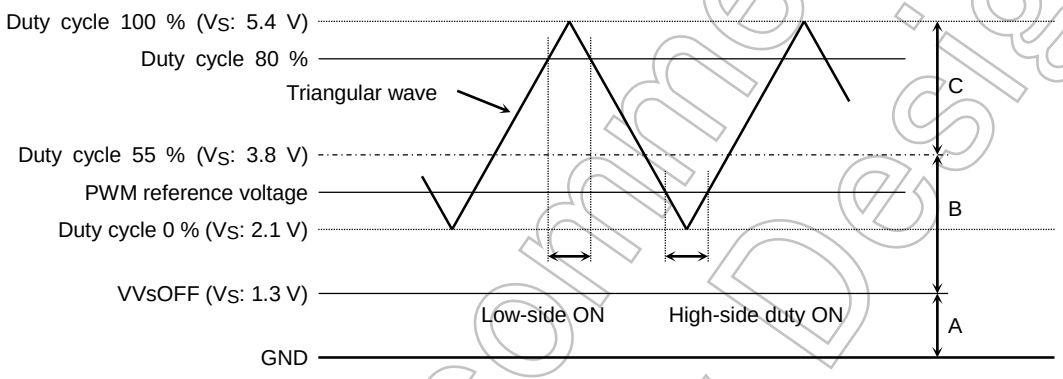

V_S Range	IGBT Operation
A	Both high and low-side OFF.
B	Charging range. Low-side IGBT refreshing on the phase the high-side IGBT in PWM.
C	No charging range. High-side at PWM according to the timing chart. Low-side no refreshing.

Safe Operating Area

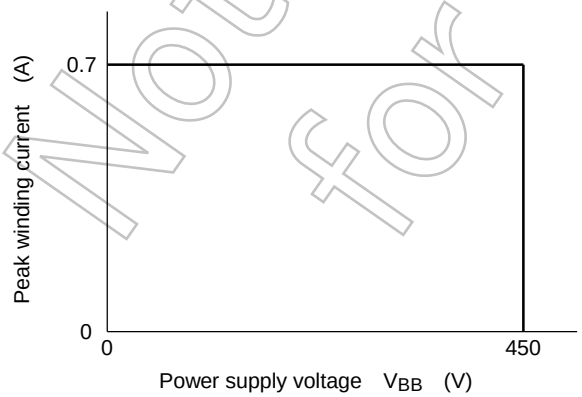

Figure 1 SOA at Tj = 135°C

Note: The above safe operating areas are at Tj = 135 °C.

Not Recommended for New Design

Downloaded from Arrow.com.

$V_{CEsat}H - T_j$

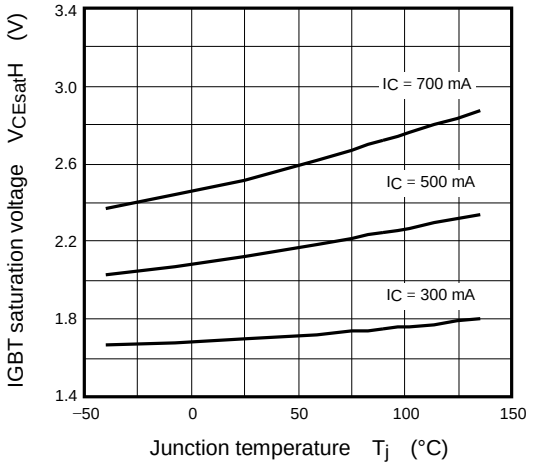

$V_{CEsat}L - T_j$

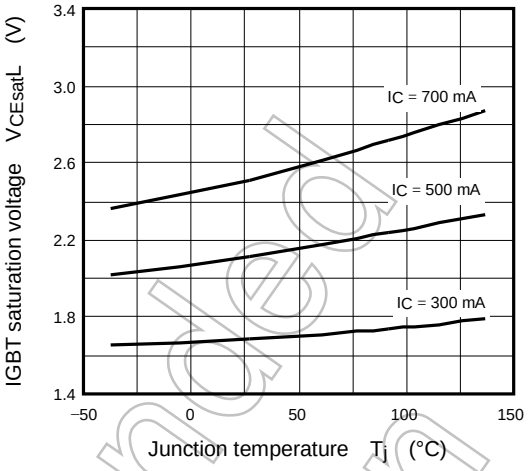

$V_FH - T_j$

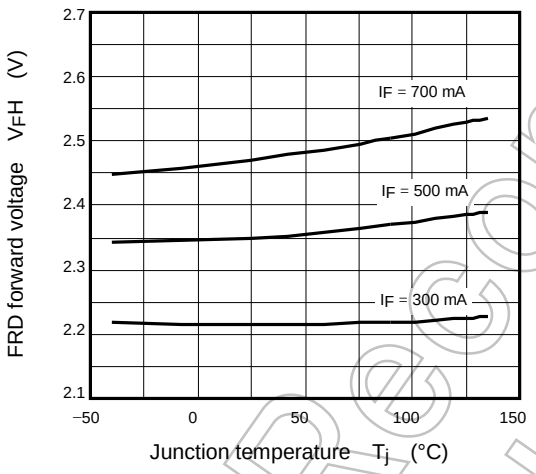

$V_FL - T_j$

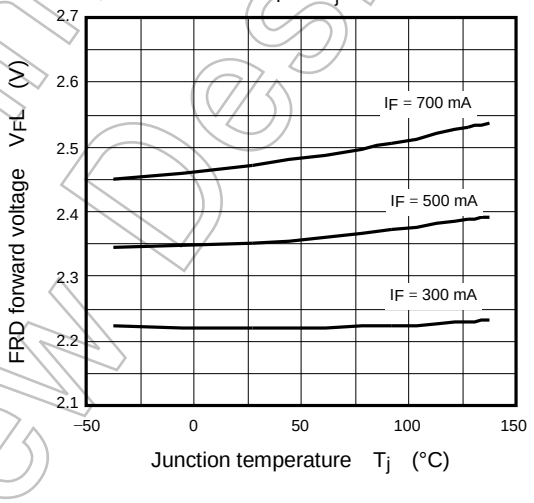

$I_{CC} - V_{CC}$

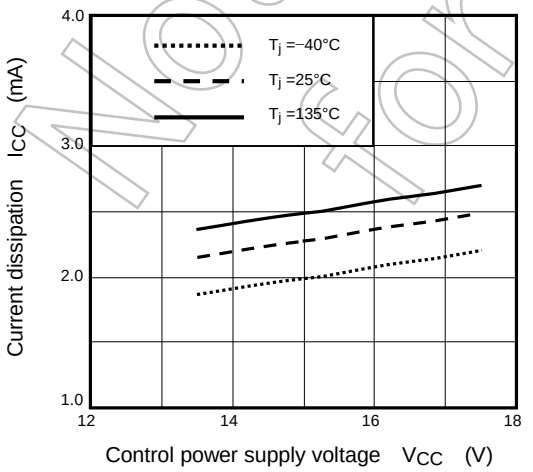

$V_{REG} - V_{CC}$

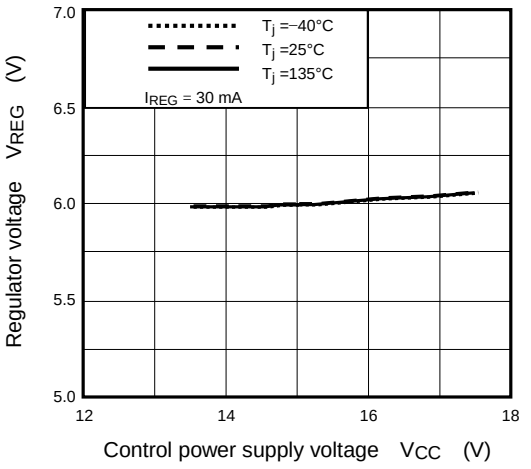

Not Recommended for New Design

Downloaded from Arrow.com.

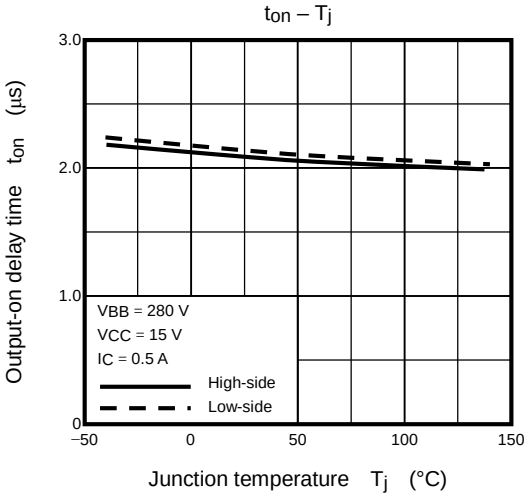

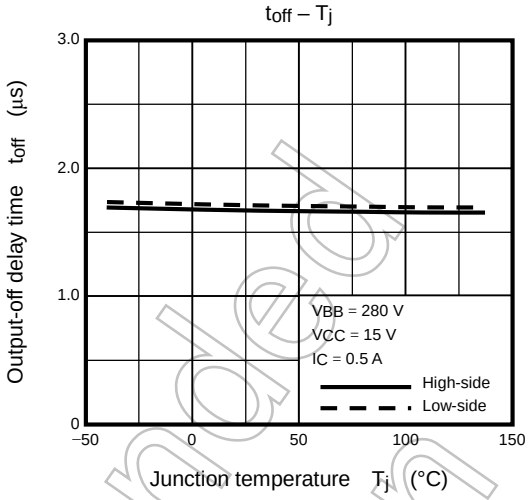

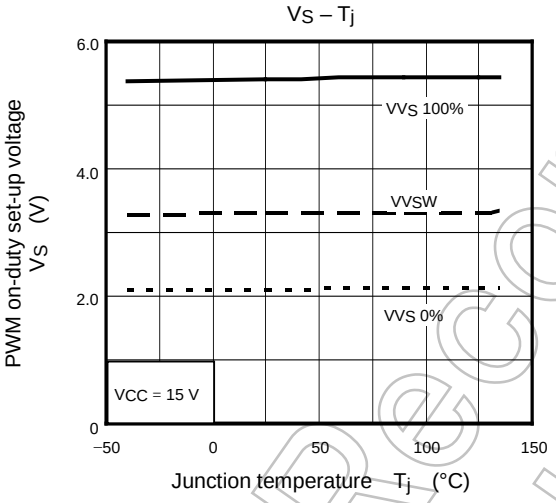

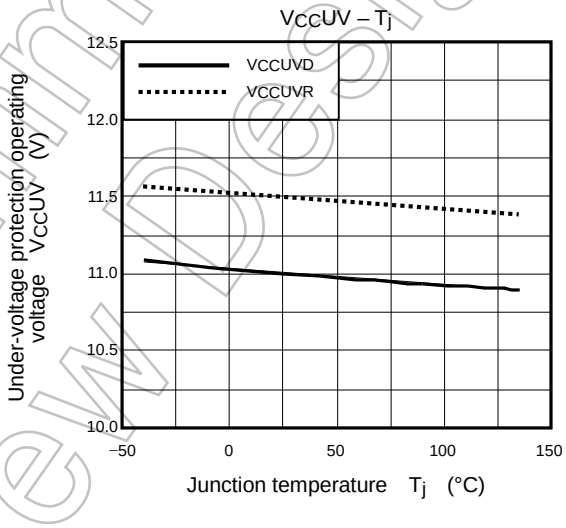

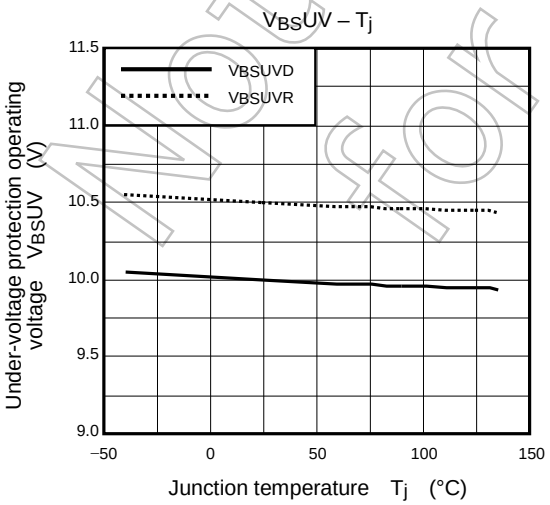

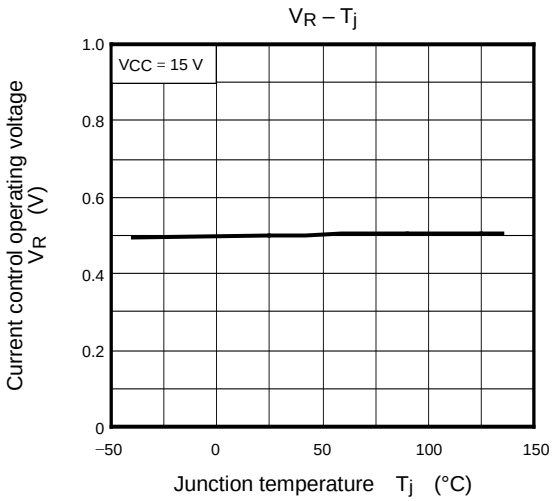

Not Recommended for New Design

Downloaded from Arrow.com.

$I_{BS\ (ON)} - V_{BS}$

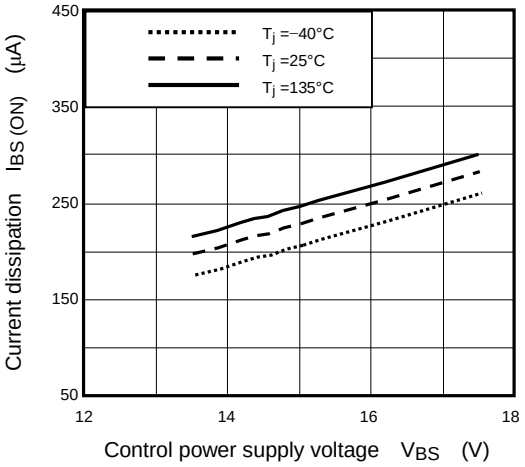

$I_{BS\ (OFF)} - V_{BS}$

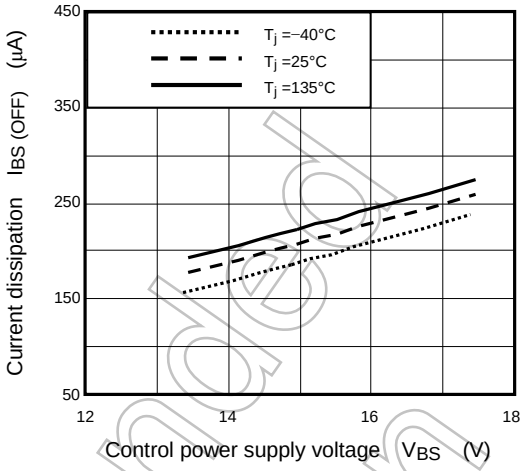

$V_{F\ (BSD)} - T_j$

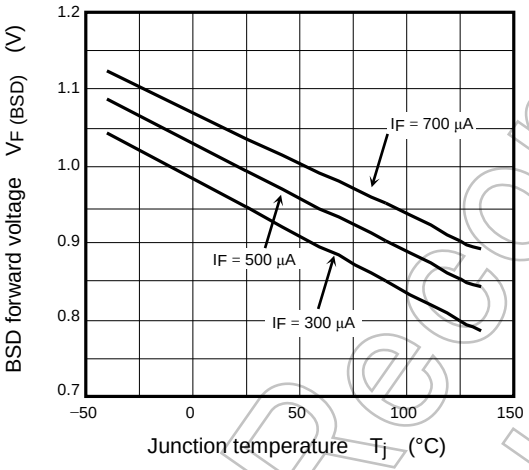

$Wt_{on} - T_j$

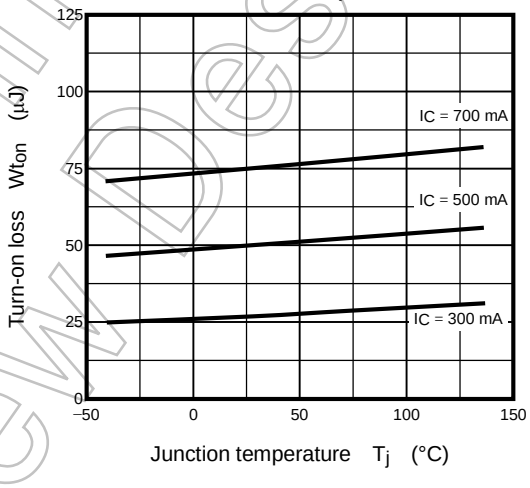

$Wt_{off} - T_j$

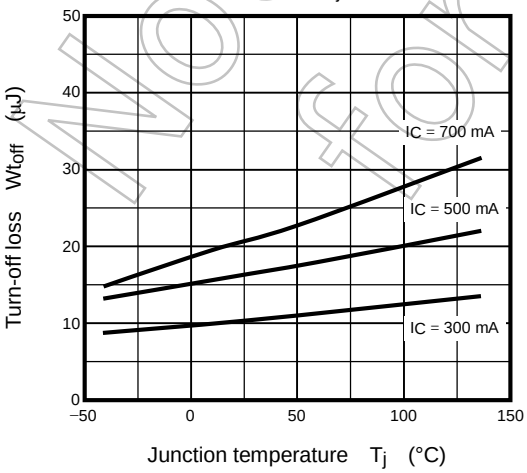

$DV_{IN}(HA) - T_j$

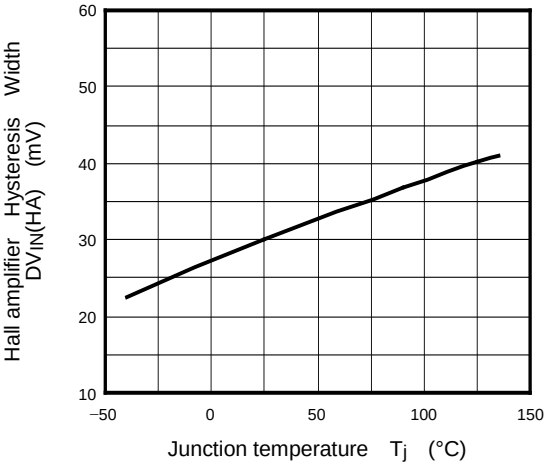

Not Recommended for New Design

Downloaded from Arrow.com.

Test Circuits

IGBT Saturation Voltage (U-phase low side)

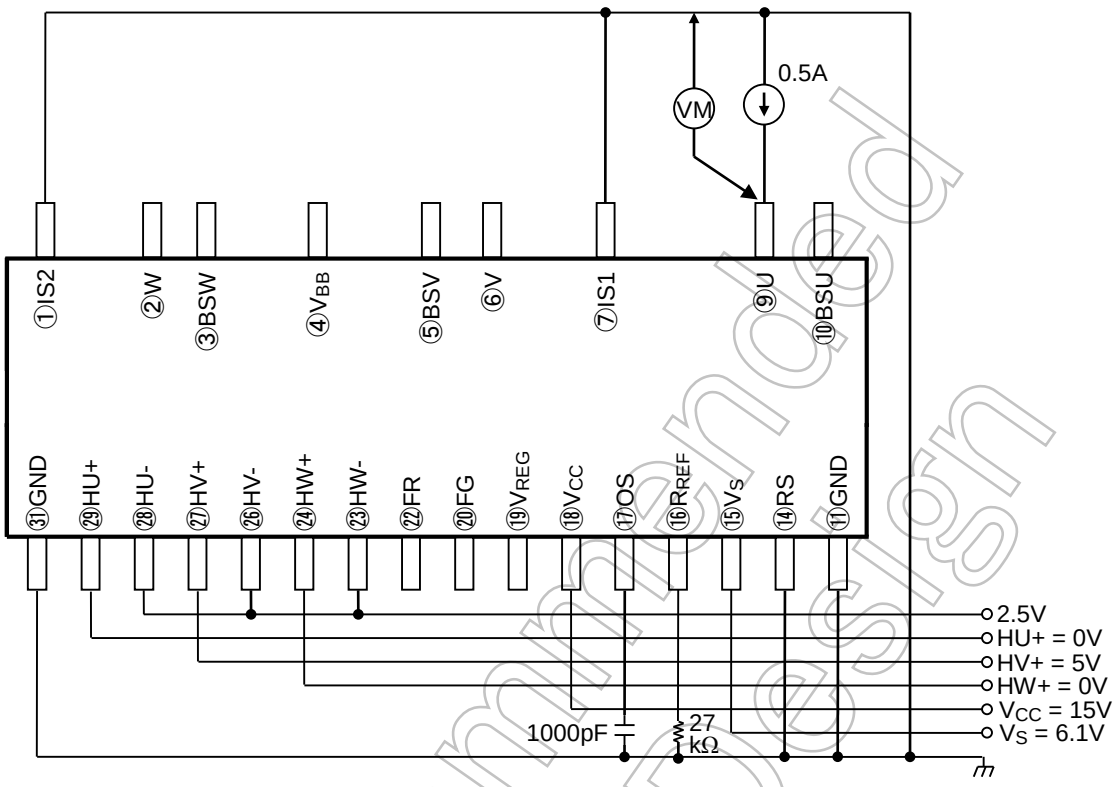

FRD Forward Voltage (U-phase low side)

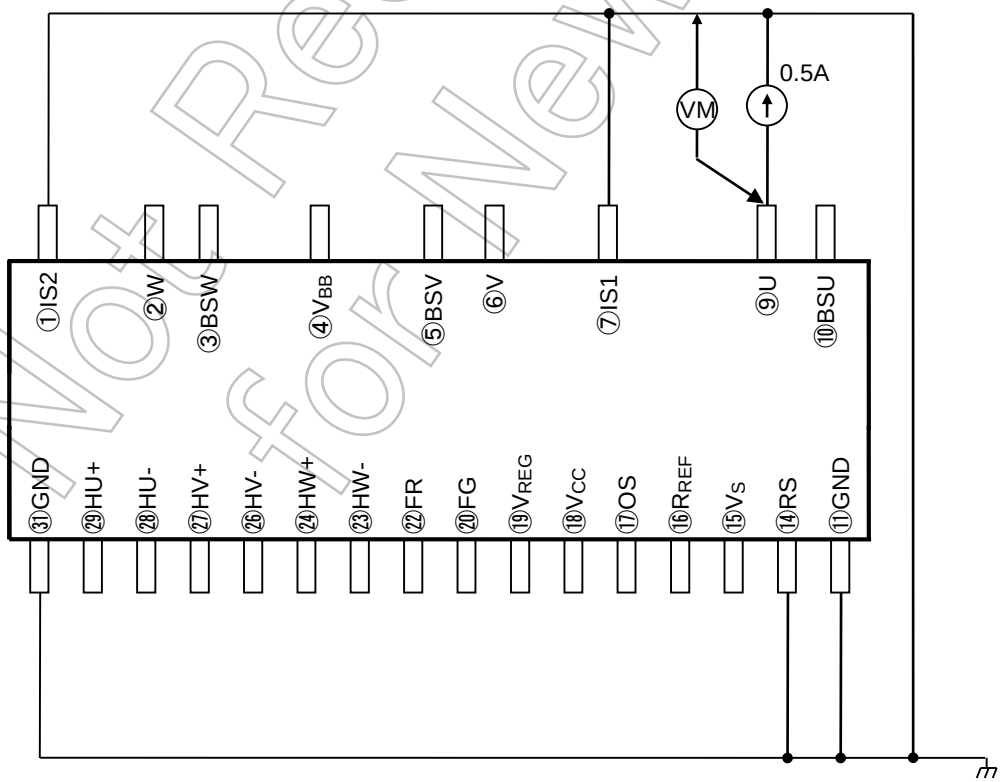

Not Recommended for New Design

Downloaded from Arrow.com.

Vcc Current Dissipation

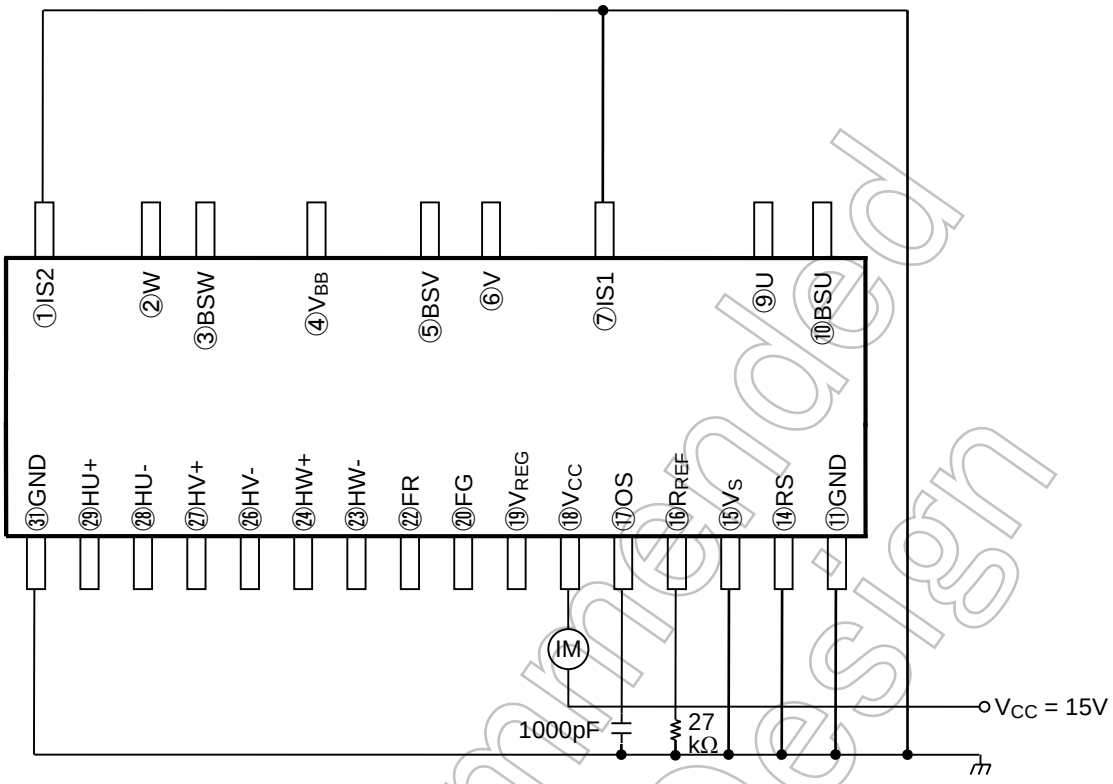

Regulator Voltage

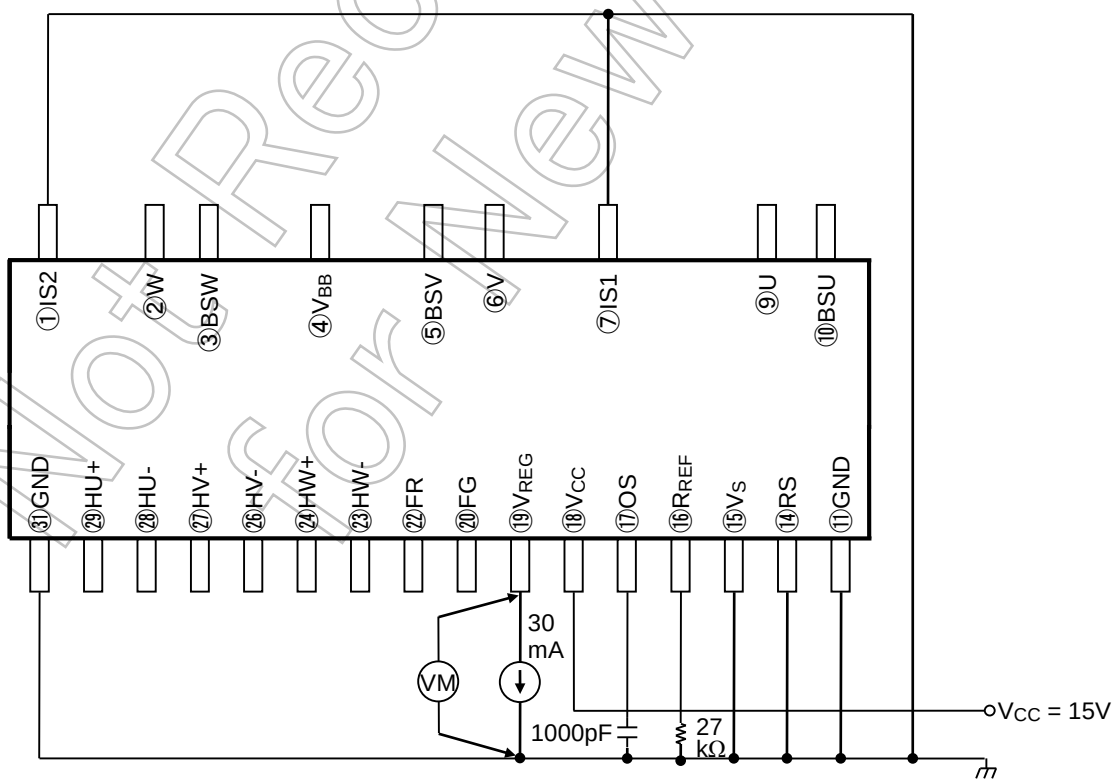

Not Recommended for New Design

Downloaded from Arrow.com.

Output ON/OFF Delay Time (U-phase low side)

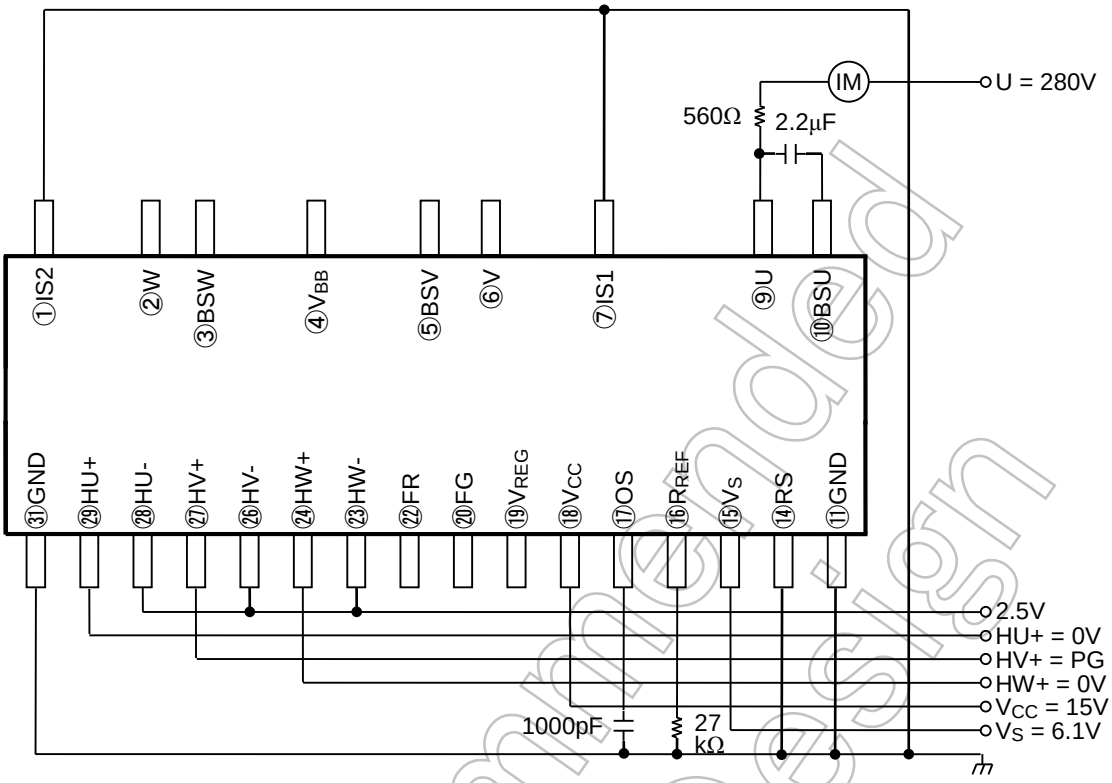

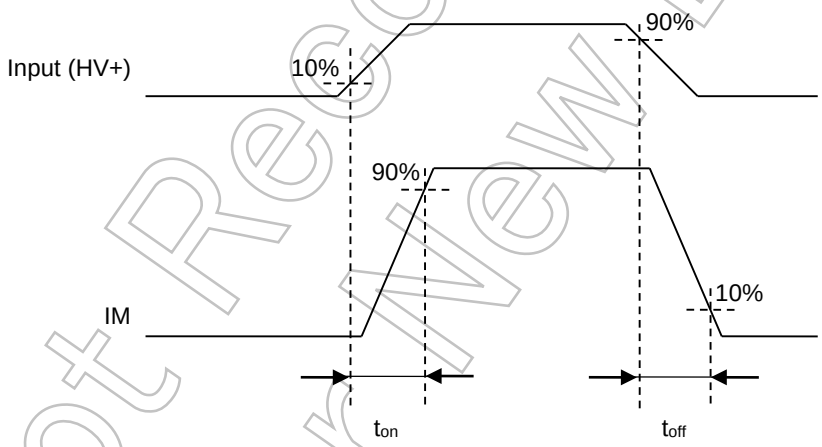

Not Recommended for New Design

Downloaded from Arrow.com.

PWM ON-duty Setup Voltage (U-phase high side)

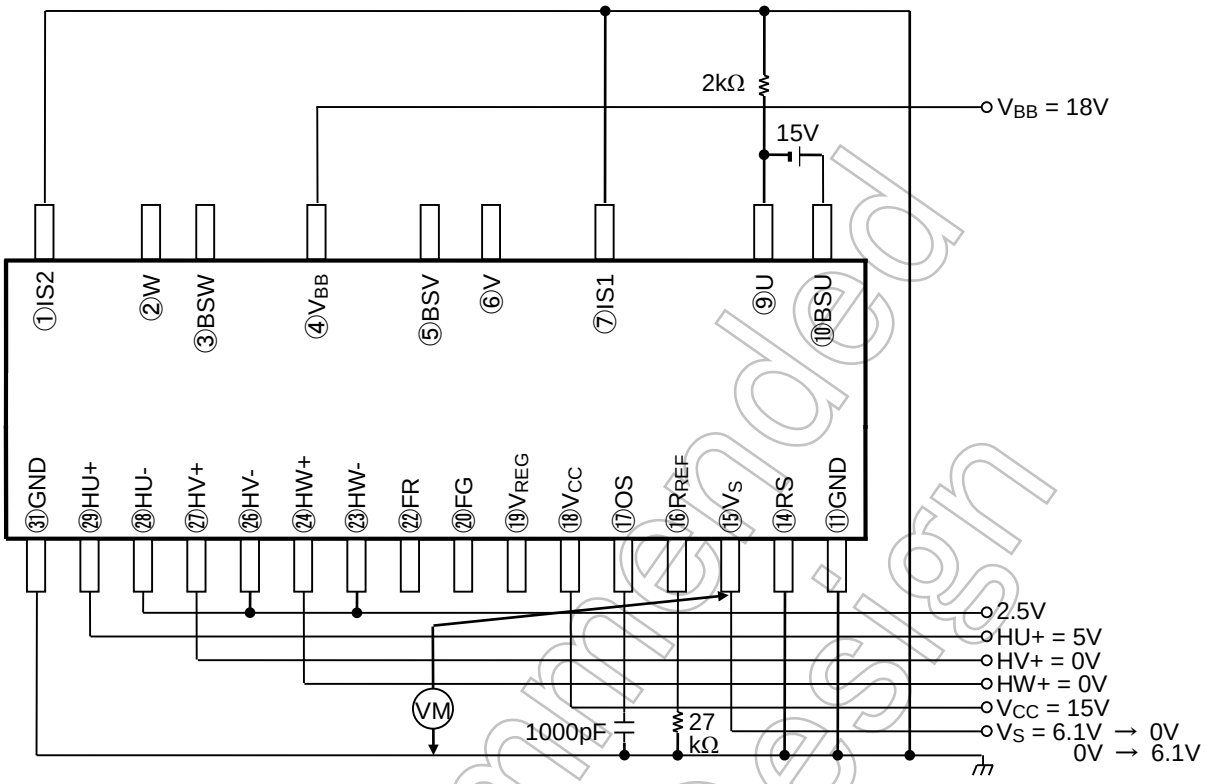

Note: Sweeps the VS pin voltage and monitors the U pin.
When output is turned off from on, the PWM = 0 %. When output is full on, the PWM = 100 %.

Not Recommended for New Design

Downloaded from Arrow.com.

VCC Under voltage Protection Operating/Recovery Voltage (U-phase low side)

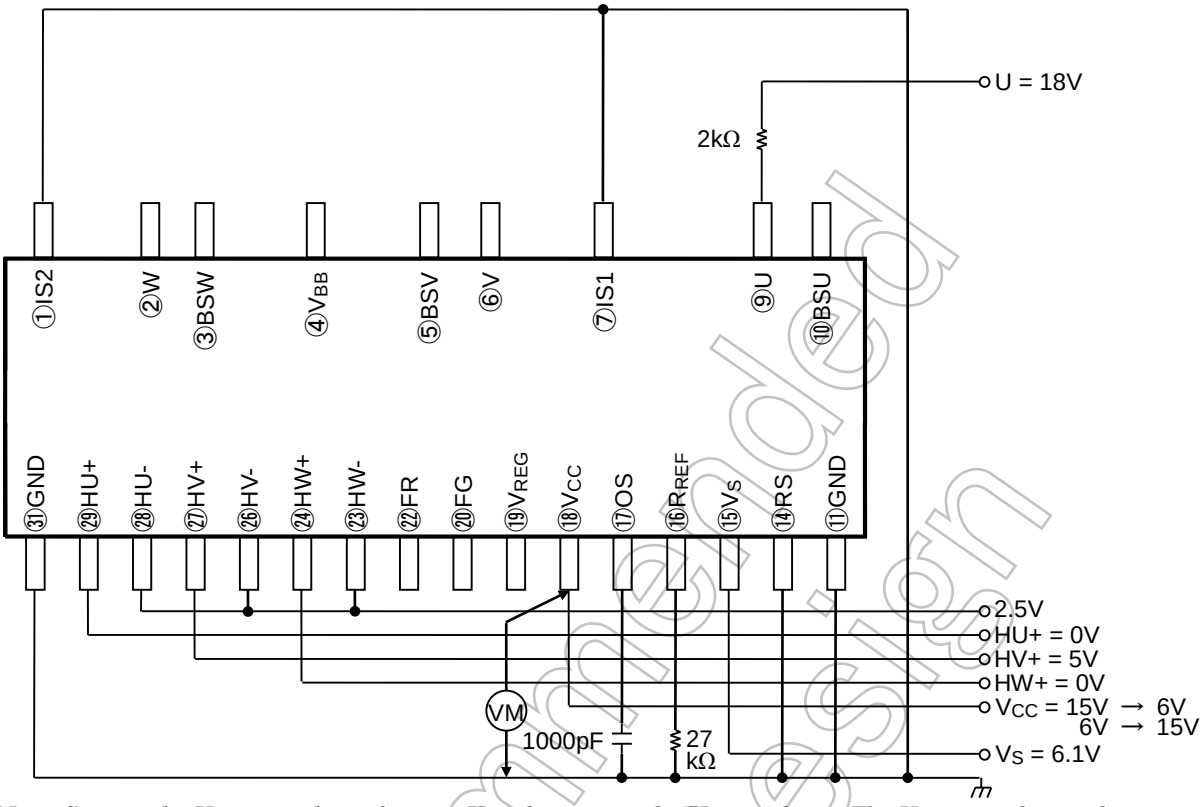

Note: Sweeps the VCC pin voltage from 15 V and monitors the U pin voltage. The VCC pin voltage when output is off defines the under-voltage protection operating voltage. Also sweeps from 6 V to increase. The VCC pin voltage when output is on defines the under voltage protection recovery voltage.

VBS Under-voltage Protection Operating/Recovery Voltage (U-phase high side)

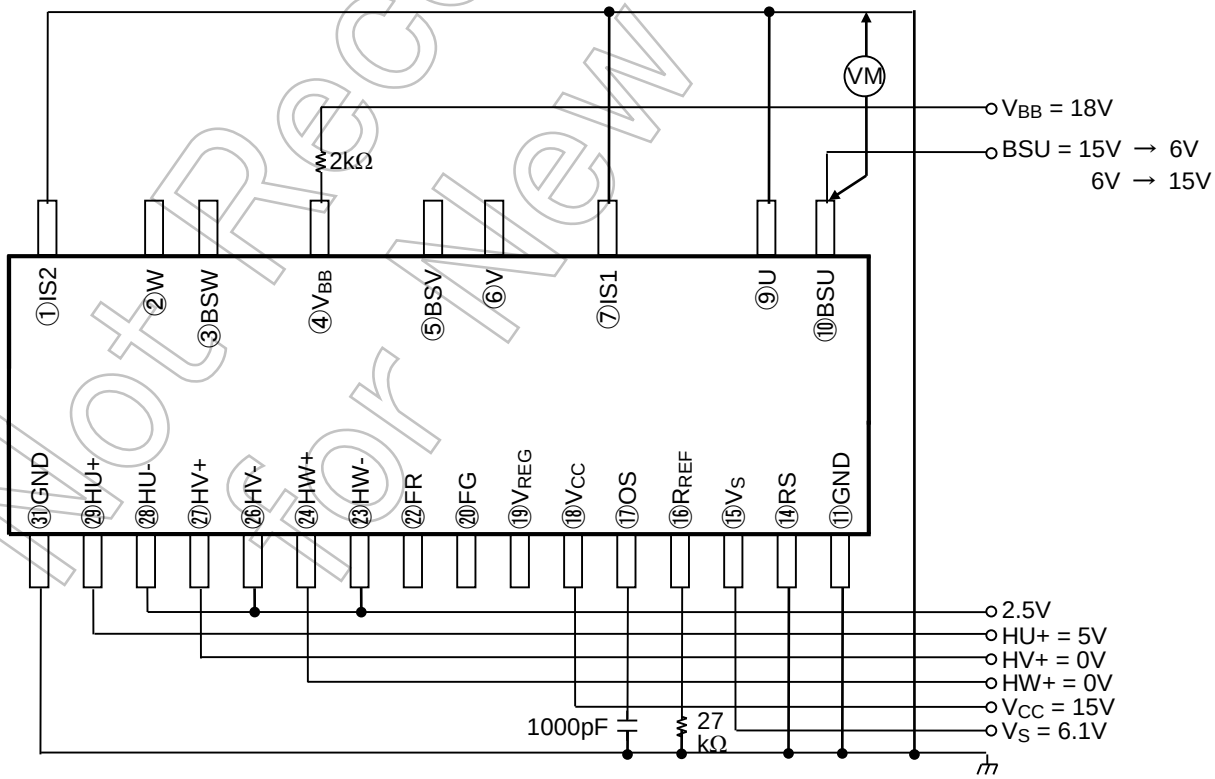

Note: Sweeps the BSU pin voltage from 15 V to decrease and monitors the VBB pin voltage. The BSU pin voltage when output is off defines the under voltage protection operating voltage. Also sweeps the BSU pin voltage from 6V to increase and change the HU pin voltage at 5V → 0V→ 5V each time. It repeats similarly output is on. The BSU pin voltage when output is on defines the under voltage protection recovery voltage.

Not Recommended for New Design

Downloaded from Arrow.com.

Current Control Operating Voltage (U-phase high side)

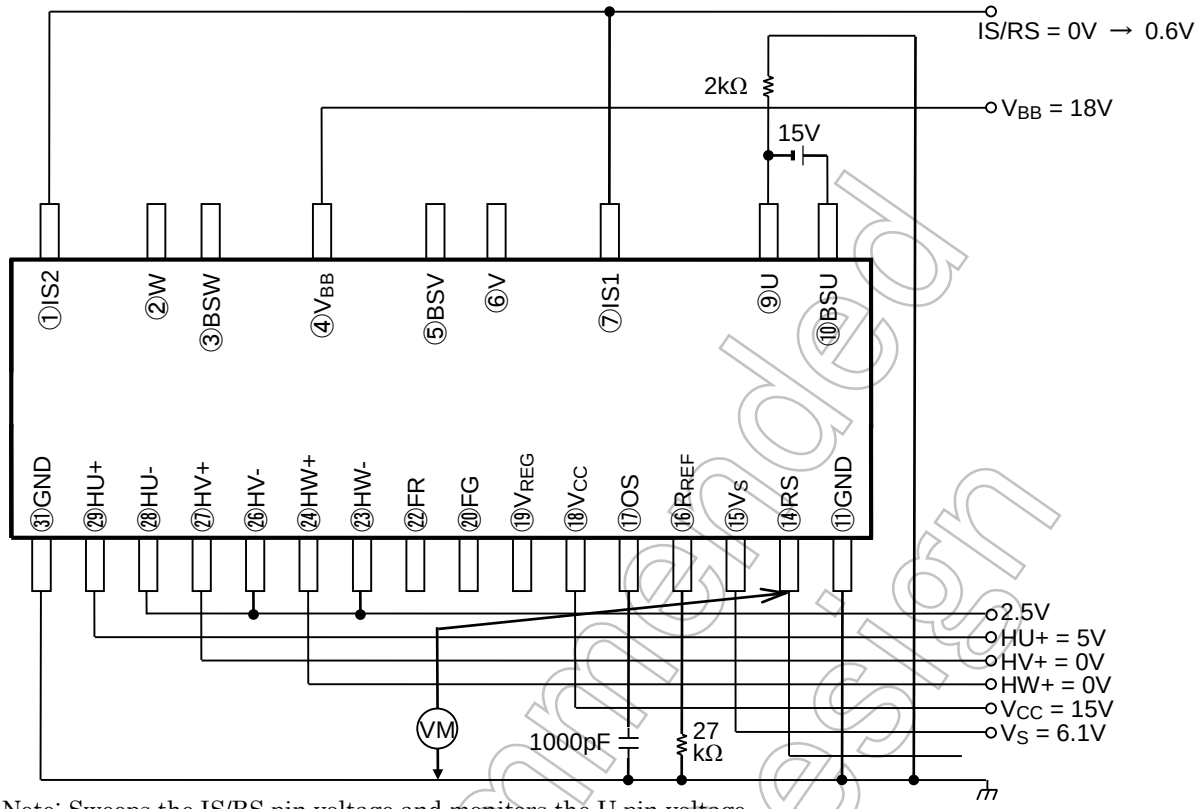

Note: Sweeps the IS/RS pin voltage and monitors the U pin voltage.
The IS/RS pin voltage when output is off defines the current control operating voltage.

VBS Current Dissipation (U-phase high side)

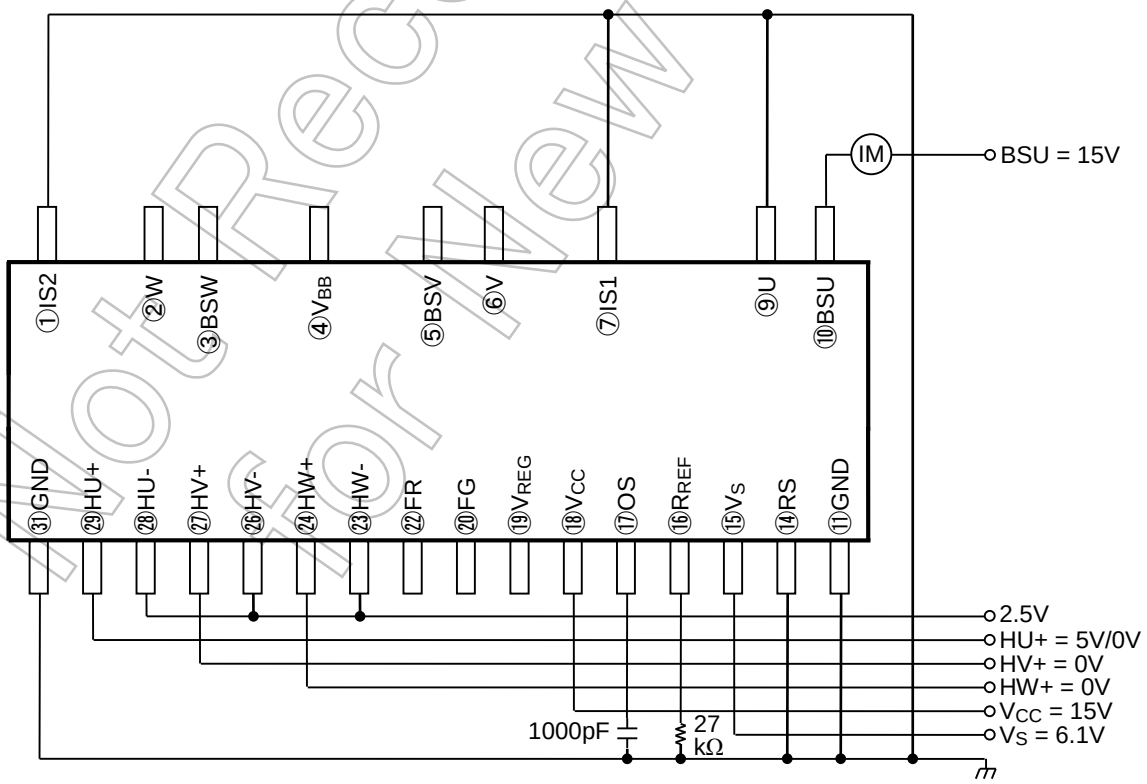

Not Recommended for New Design

Downloaded from Arrow.com.

BSD Forward Voltage (U-phase)

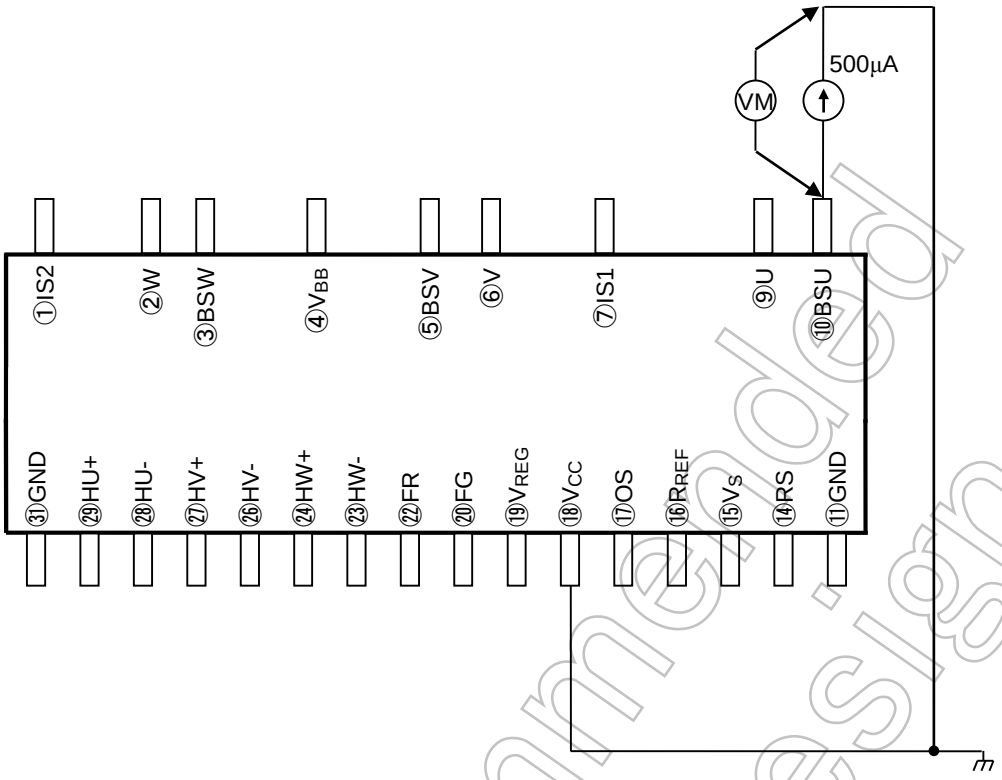

Not Recommended for New Design

Downloaded from Arrow.com.

Turn-ON/OFF Loss (low side IGBT + high side FRD)

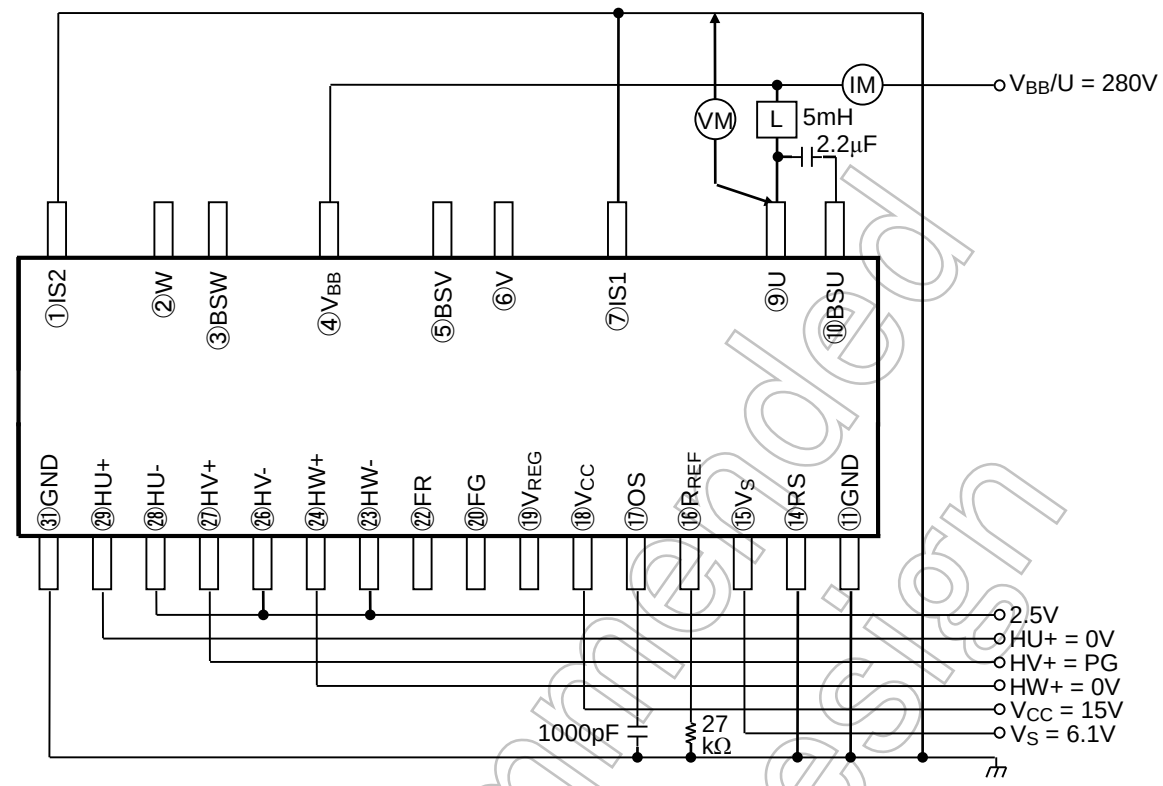

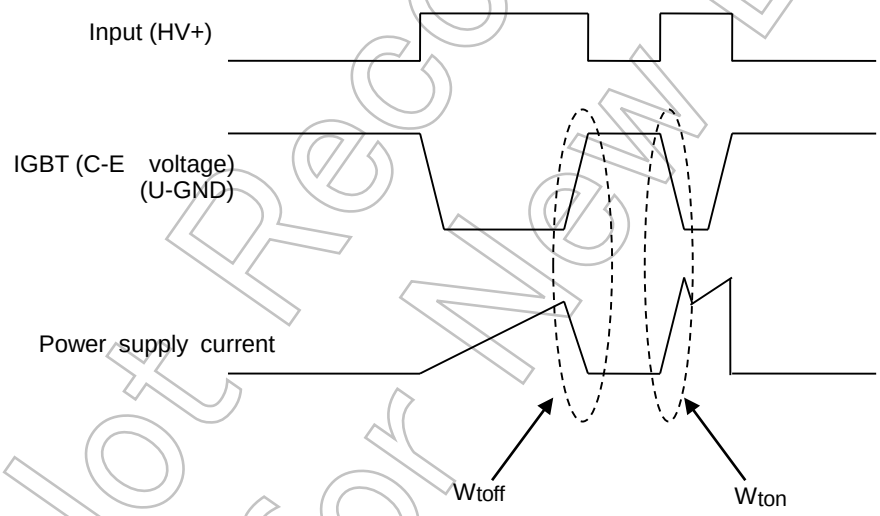

Not Recommended for New Design

Downloaded from Arrow.com.

Package Dimensions

P-HSSOP31-0918-0.80-001

Unit: mm

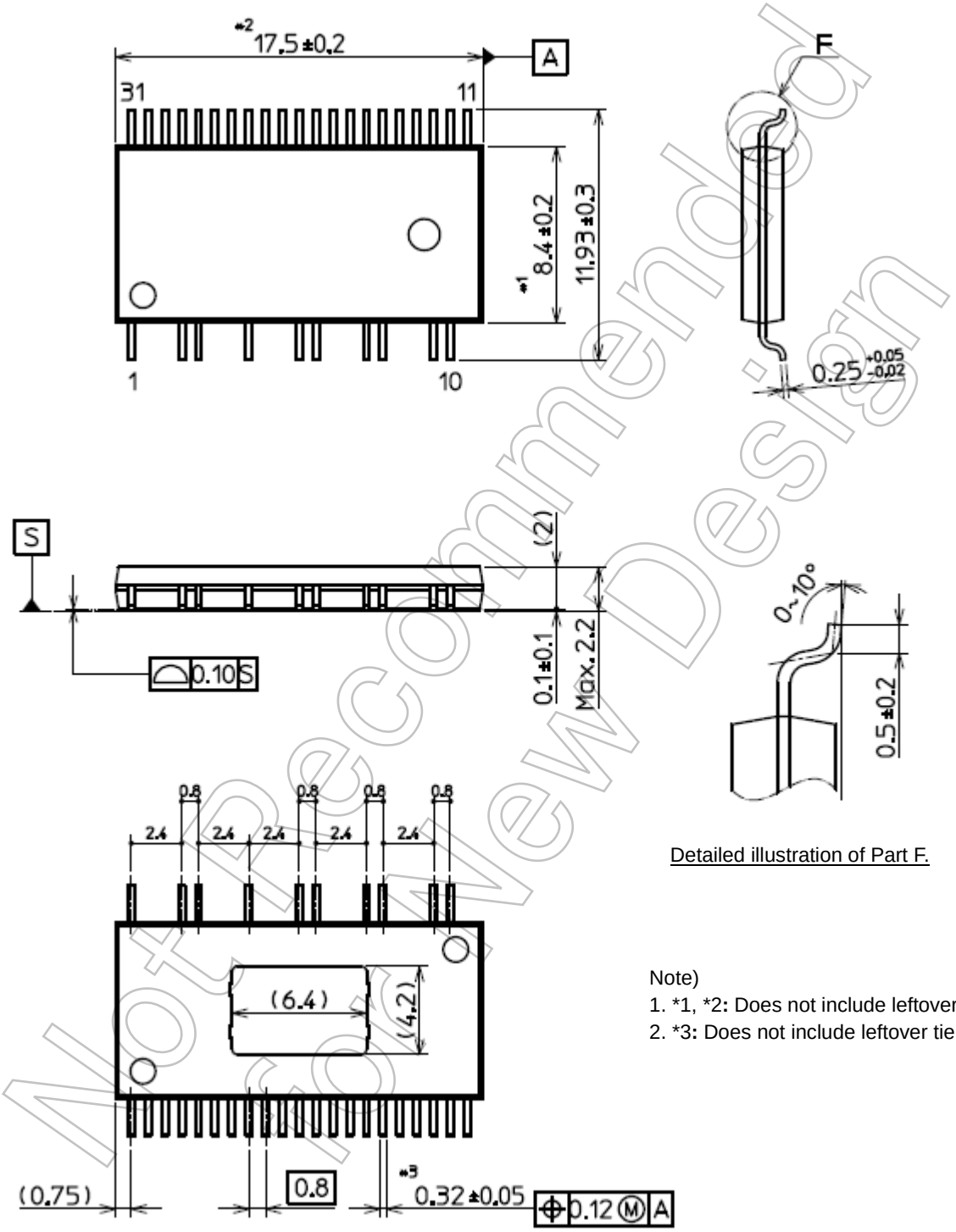

Detailed illustration of Part F.

Note)
1. *1, *2: Does not include leftover resin.
2. *3: Does not include leftover tiebar.

Weight: 0.7 g (typ.)

Not Recommended for New Design

Downloaded from Arrow.com.

Package Dimensions

P-HSSOP31-0918-0.80-002

Unit: mm

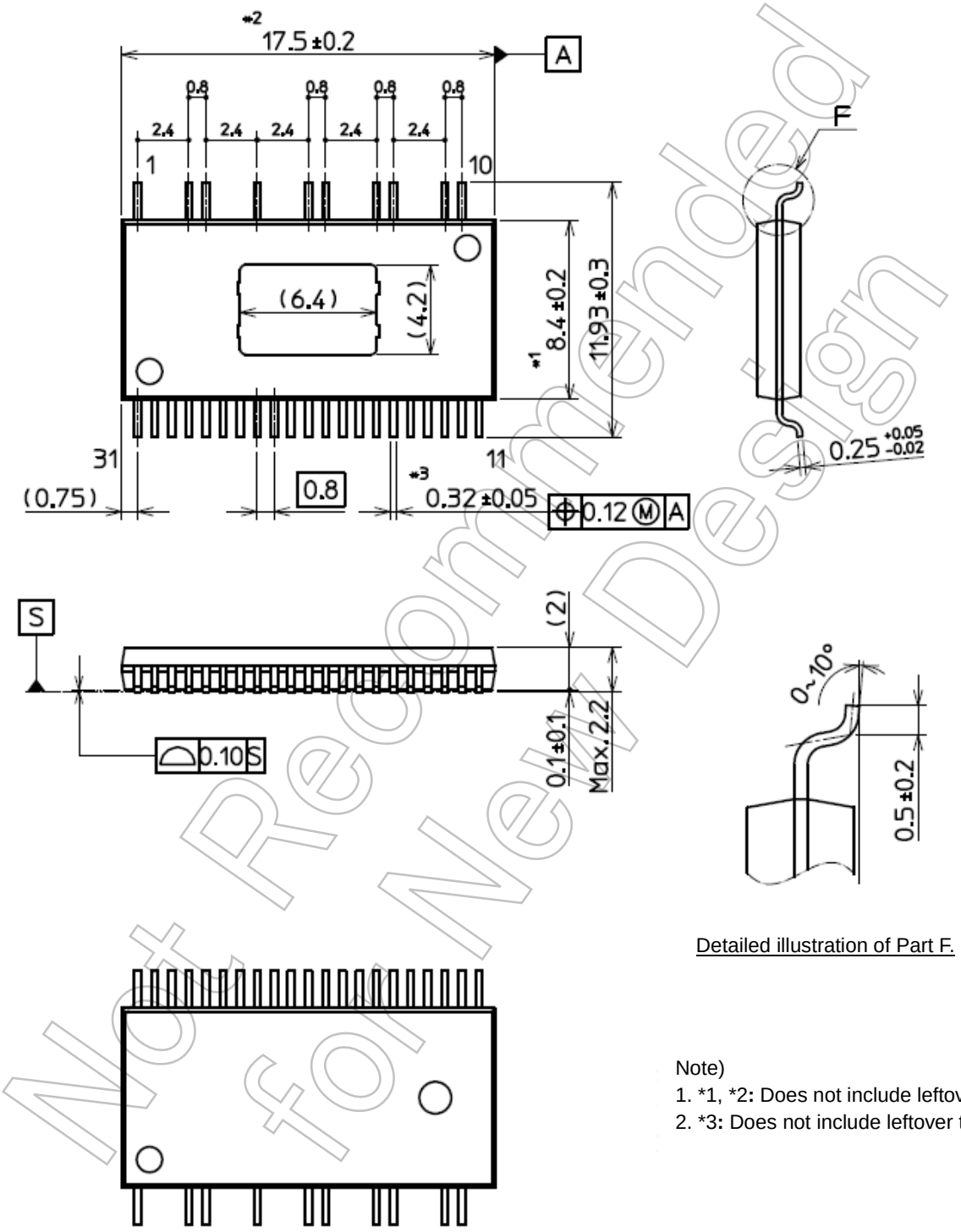

Detailed illustration of Part F.

Note)
1. *1, *2: Does not include leftover resin.
2. *3: Does not include leftover tiebar.

Weight: 0.7 g (typ.)

Not Recommended for New Design

Downloaded from Arrow.com.

RESTRICTIONS ON PRODUCT USE

- Toshiba Corporation, and its subsidiaries and affiliates (collectively "TOSHIBA"), reserve the right to make changes to the information in this document, and related hardware, software and systems (collectively "Product") without notice.
- This document and any information herein may not be reproduced without prior written permission from TOSHIBA. Even with TOSHIBA's written permission, reproduction is permissible only if reproduction is without alteration/omission.
- Though TOSHIBA works continually to improve Product's quality and reliability, Product can malfunction or fail. Customers are responsible for complying with safety standards and for providing adequate designs and safeguards for their hardware, software and systems which minimize risk and avoid situations in which a malfunction or failure of Product could cause loss of human life, bodily injury or damage to property, including data loss or corruption. Before customers use the Product, create designs including the Product, or incorporate the Product into their own applications, customers must also refer to and comply with (a) the latest versions of all relevant TOSHIBA information, including without limitation, this document, the specifications, the data sheets and application notes for Product and the precautions and conditions set forth in the "TOSHIBA Semiconductor Reliability Handbook" and (b) the instructions for the application with which the Product will be used with or for. Customers are solely responsible for all aspects of their own product design or applications, including but not limited to (a) determining the appropriateness of the use of this Product in such design or applications; (b) evaluating and determining the applicability of any information contained in this document, or in charts, diagrams, programs, algorithms, sample application circuits, or any other referenced documents; and (c) validating all operating parameters for such designs and applications. **TOSHIBA ASSUMES NO LIABILITY FOR CUSTOMERS' PRODUCT DESIGN OR APPLICATIONS.**
- **PRODUCT IS NEITHER INTENDED NOR WARRANTED FOR USE IN EQUIPMENTS OR SYSTEMS THAT REQUIRE EXTRAORDINARILY HIGH LEVELS OF QUALITY AND/OR RELIABILITY, AND/OR A MALFUNCTION OR FAILURE OF WHICH MAY CAUSE LOSS OF HUMAN LIFE, BODILY INJURY, SERIOUS PROPERTY DAMAGE AND/OR SERIOUS PUBLIC IMPACT ("UNINTENDED USE").** Except for specific applications as expressly stated in this document, Unintended Use includes, without limitation, equipment used in nuclear facilities, equipment used in the aerospace industry, medical equipment, equipment used for automobiles, trains, ships and other transportation, traffic signaling equipment, equipment used to control combustions or explosions, safety devices, elevators and escalators, devices related to electric power, and equipment used in finance-related fields. **IF YOU USE PRODUCT FOR UNINTENDED USE, TOSHIBA ASSUMES NO LIABILITY FOR PRODUCT.** For details, please contact your TOSHIBA sales representative.
- Do not disassemble, analyze, reverse-engineer, alter, modify, translate or copy Product, whether in whole or in part.
- Product shall not be used for or incorporated into any products or systems whose manufacture, use, or sale is prohibited under any applicable laws or regulations.
- The information contained herein is presented only as guidance for Product use. No responsibility is assumed by TOSHIBA for any infringement of patents or any other intellectual property rights of third parties that may result from the use of Product. No license to any intellectual property right is granted by this document, whether express or implied, by estoppel or otherwise.
- **ABSENT A WRITTEN SIGNED AGREEMENT, EXCEPT AS PROVIDED IN THE RELEVANT TERMS AND CONDITIONS OF SALE FOR PRODUCT, AND TO THE MAXIMUM EXTENT ALLOWABLE BY LAW, TOSHIBA (1) ASSUMES NO LIABILITY WHATSOEVER, INCLUDING WITHOUT LIMITATION, INDIRECT, CONSEQUENTIAL, SPECIAL, OR INCIDENTAL DAMAGES OR LOSS, INCLUDING WITHOUT LIMITATION, LOSS OF PROFITS, LOSS OF OPPORTUNITIES, BUSINESS INTERRUPTION AND LOSS OF DATA, AND (2) DISCLAIMS ANY AND ALL EXPRESS OR IMPLIED WARRANTIES AND CONDITIONS RELATED TO SALE, USE OF PRODUCT, OR INFORMATION, INCLUDING WARRANTIES OR CONDITIONS OF MERCHANTABILITY, FITNESS FOR A PARTICULAR PURPOSE, ACCURACY OF INFORMATION, OR NONINFRINGEMENT.**
- Do not use or otherwise make available Product or related software or technology for any military purposes, including without limitation, for the design, development, use, stockpiling or manufacturing of nuclear, chemical, or biological weapons or missile technology products (mass destruction weapons). Product and related software and technology may be controlled under the applicable export laws and regulations including, without limitation, the Japanese Foreign Exchange and Foreign Trade Law and the U.S. Export Administration Regulations. Export and re-export of Product or related software or technology are strictly prohibited except in compliance with all applicable export laws and regulations.
- Please contact your TOSHIBA sales representative for details as to environmental matters such as the RoHS compatibility of Product. Please use Product in compliance with all applicable laws and regulations that regulate the inclusion or use of controlled substances, including without limitation, the EU RoHS Directive. **TOSHIBA ASSUMES NO LIABILITY FOR DAMAGES OR LOSSES OCCURRING AS A RESULT OF NONCOMPLIANCE WITH APPLICABLE LAWS AND REGULATIONS.**

Not Recommended for New Design

Downloaded from Arrow.com.