ALARM SPEAKER

Product No. 120217

BLS66-2-06H28-01W65J

Issue No. BS/TES01.2038



Features:

- Large power
- Loud sound output
- RoHS

Drawn by	Checked by	Approved by	Customer approved
Litra.Yang	Peter.Huang	Jason.Zhang	

BESTAR Holdings Co., Ltd.

www.be-star.com | info@be-star.com

Downloaded from Arrow.com.

Content:

1 Characteristics 3
1.1 Technical terms 3
1.2 Test method 4
1.3 Frequency Response Curve 5
1.4 F0 Curve 6
2 Part List 7
3 Dimension 8
4 Reliability Test 9
5 Packing 10
5.1 Packing drawing 10
5.2 Packing quantity 10
6 History change record 11
7 Important Notice 12

Downloaded from Arrow.com.

1.Characteristics

1.1Technical terms

1. Size	See Product drawing
2. Impedance(at 1KHz)	6±15%Ω
3. Lowest Resonance frequency	1200±20%Hz
4.Operating frequency range	800...16kHz
5. Rated input power	6W
6. Maximum input power	10W
7. Square wave power at 1200Hz	20W
8. Buzz & Rattle(at sine wave 6V)	must be normal
9. SPL(0.5m/1W sine wave)	109-2/+5dB at F0
10. Membrane	PEI
11. IP rating	IP67
12. Voice coil	Ø14.28*12*6Ω/SV0.1
13. Operating temperature	-40...+105℃
14. Storage temperature	-40...+105℃

Downloaded from Arrow.com.

1.2 Test method:

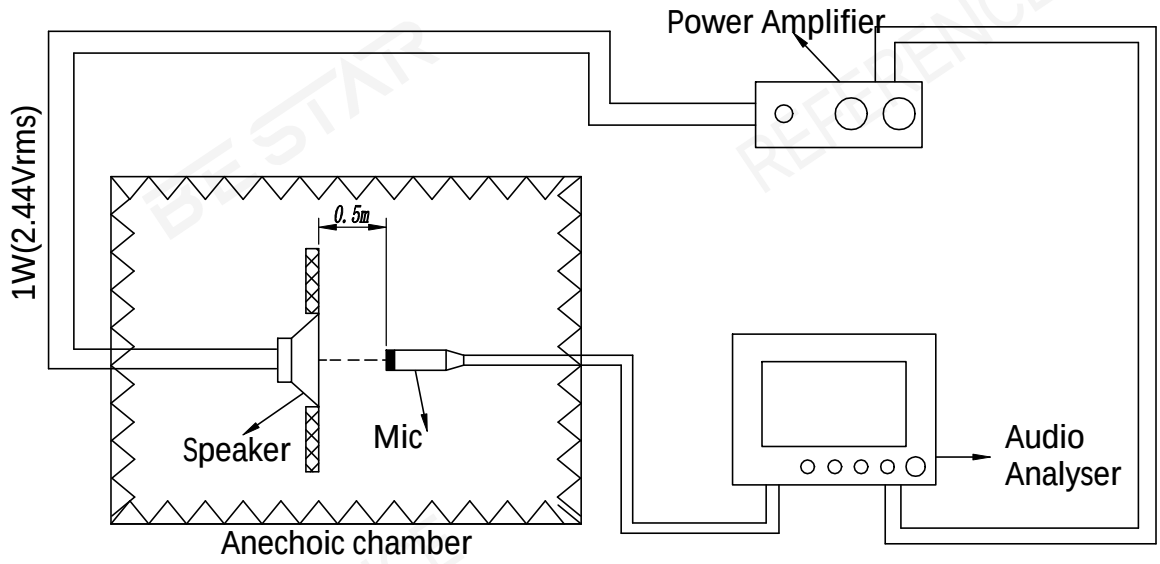

Downloaded from Arrow.com.

1.3 Frequency Response Curve (only for reference)

A: Frequency Response Magn 0 dB re 20.00 μPa/V 1/12Oct



1.3.1 Sensitivity

SPL is expressed in dB rel 20 μPa,computed according to IEC 268-5.
Measurement set up according chapter 1.2 and parameters according chapter 1.3.

Downloaded from Arrow.com.

1.4 F0 Curve (only for reference)

A: Frequency Response Magn 0 dB re 20.00 µPa/V 1/12Oct

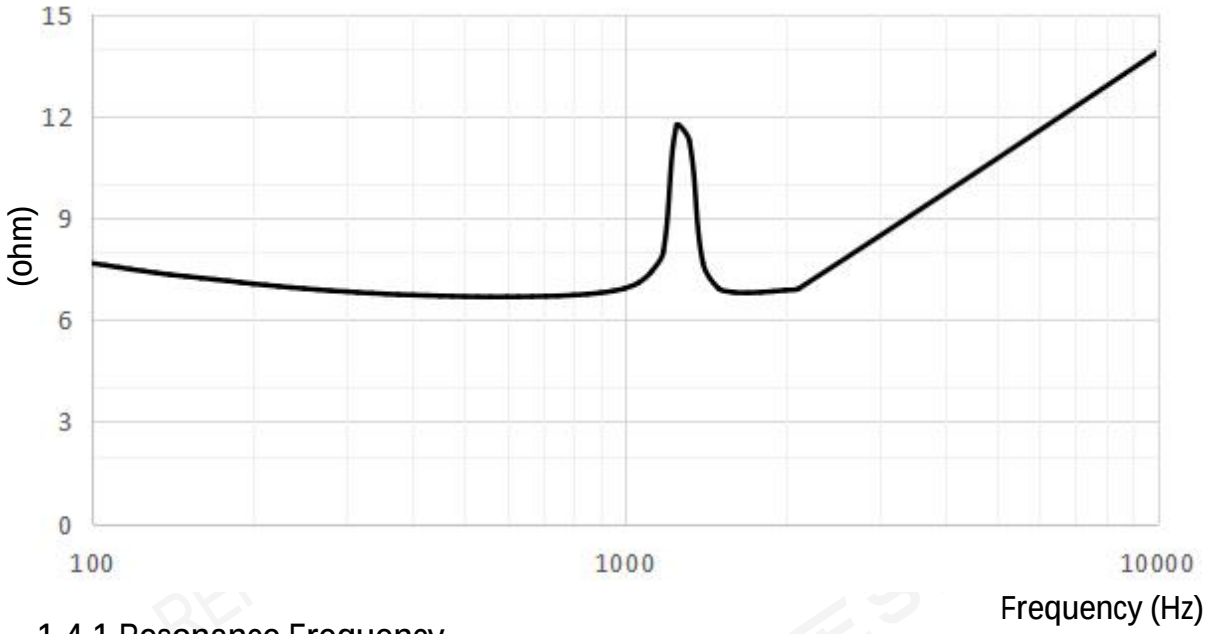

1.4.1 Resonance Frequency

Resonance frequency is measured according test set up in chapter 1.2 and parameters according chapter 1.4

Downloaded from Arrow.com.

2.Part List

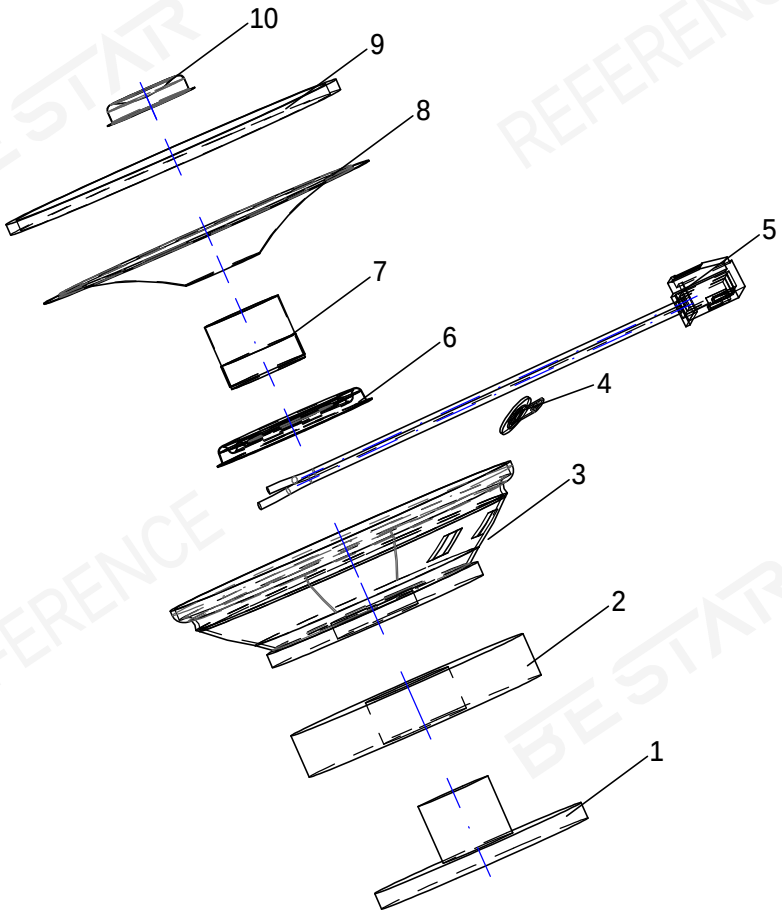

10.Dust cap	PEI
9.Rubber-edge	Rubber
8. Waterproof	PEI
7. Voice coil	KAPTON+SV0.10
6. Damper	NOMEX
5.Wire lead	UL3302 24AWG#RED&BLACK
	Housing：XHS-2.5
4. Junction board	Cu+Hardboard
3. Frame	SPCC
2. Magnet	Ferrite
1. T-yoke	SPCC

Downloaded from Arrow.com.

3. Dimension

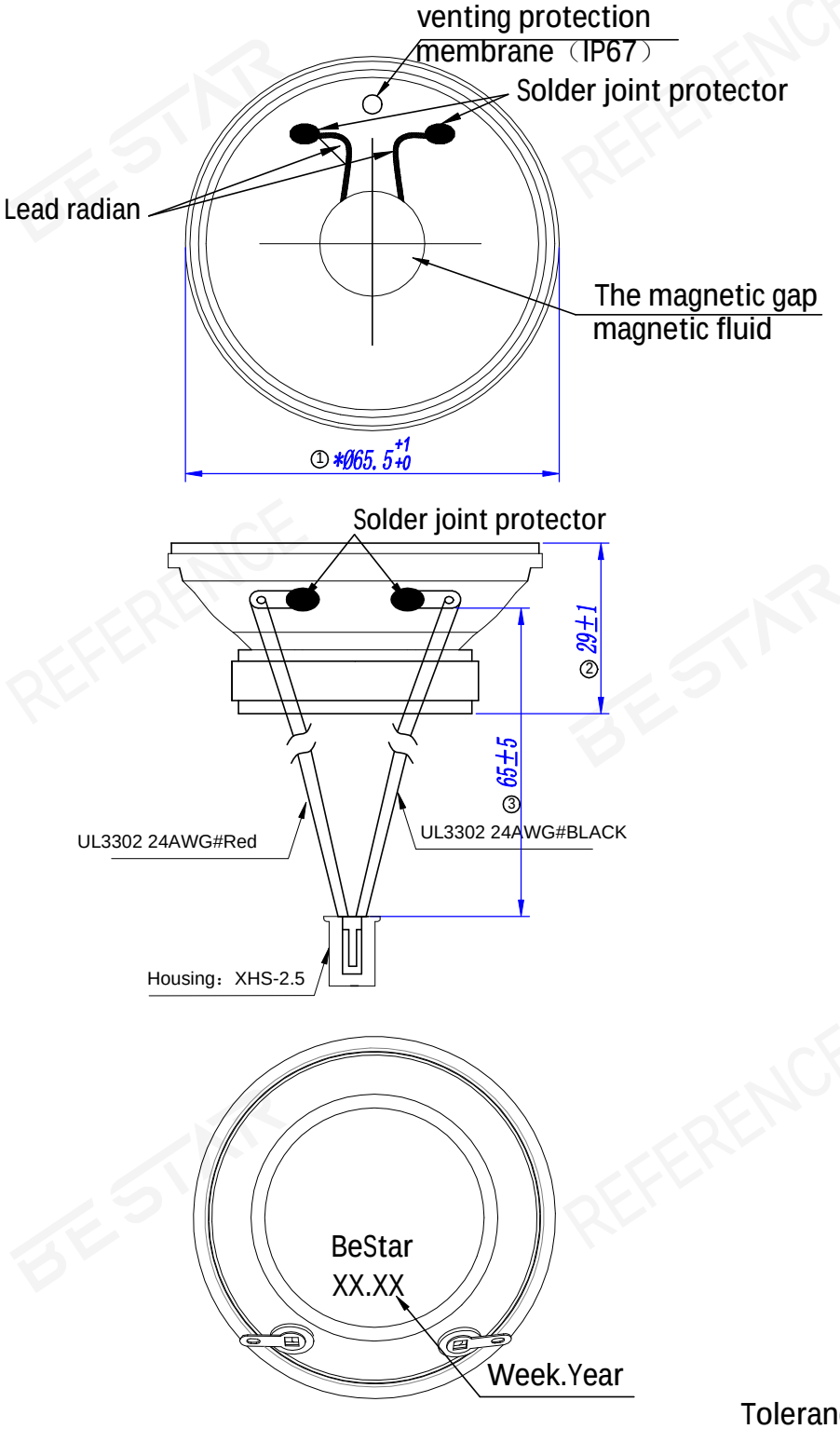

Tolerance:±0.3mm

Downloaded from Arrow.com.

4. Reliability test

4.1 Ordinary temp life

Room temperature sine wave 1200-5000Hz 6W(6Vrms) input 96 hours frequency scanning speed 1.5s.At the end of the experiment, the product was placed at room temperature for 2 hours, and then the abnormal sound frequency sweep and acoustic parameters were tested. Sinusoidal wave 6Vrms (100~10KHz) sweeps without abnormal sound, F0 should meet the original specification requirements, and the output sound pressure variation is within ±3dB.

4.2 High temp life

Under the condition of high temperature +105±2℃,48 hours. At the end of the experiment, the product was placed at room temperature for 2 hours, and then the abnormal sound frequency sweep and acoustic parameters were tested. Sinusoidal wave 6Vrms (100~10KHz) sweeps without abnormal sound, F0 should meet the original specifications, and the output sound pressure variation is within ±6dB.

4.3 Low temp life

Under the condition of low-temperature -40℃±3℃,48 hours. At the end of the experiment, the product was placed at room temperature for 2 hours, and then the abnormal sound frequency sweep and acoustic parameters were tested. Sinusoidal wave 6Vrms (100~10KHz) sweeps without abnormal sound, F0 should meet the original specifications, and the output sound pressure variation is within ±6dB.

4.4 Temperature change(shock)

Under the condition of constant temperature -40℃±3℃, +105±2℃, Dwell time each temperature 30 min, Transfer time from lower to upper temperature<10s,The product is subjected to 100 times of temperature cycling impact. At the end of the experiment, the product was placed at room temperature for 2 hours, and then the abnormal sound frequency sweep and acoustic parameters were tested. Sinusoidal wave 6Vrms (100~10KHz) sweeps without abnormal sound, F0 should meet the original specifications, and the output sound pressure variation is within ±6dB.

4.5 Moisture Test

Under the condition of constant temperature +40±3℃ relative humidity of 92±2%RH, 48 hours. At the end of the experiment, the product was placed at room temperature for 2 hours, and then the abnormal sound frequency sweep and acoustic parameters were tested. Sinusoidal wave 6Vrms (100~10KHz) sweeps without abnormal sound, F0 should meet the original specifications, and the output sound pressure variation is within ±6dB.

4.6 Drop test

Free fall on concrete or steel 75 cm high once every 3 surfaces for a total of 3 times. After the test, there is no separation, clearance or cracking in part of the product. The sinusoid wave sweeps 6Vrms (100~10KHz) without abnormal sound. F0 should meet the original specifications and the variation of output sound pressure is within ±3dB.

Downloaded from Arrow.com.

5. Packing

5.1 Packing drawing (unit:mm)

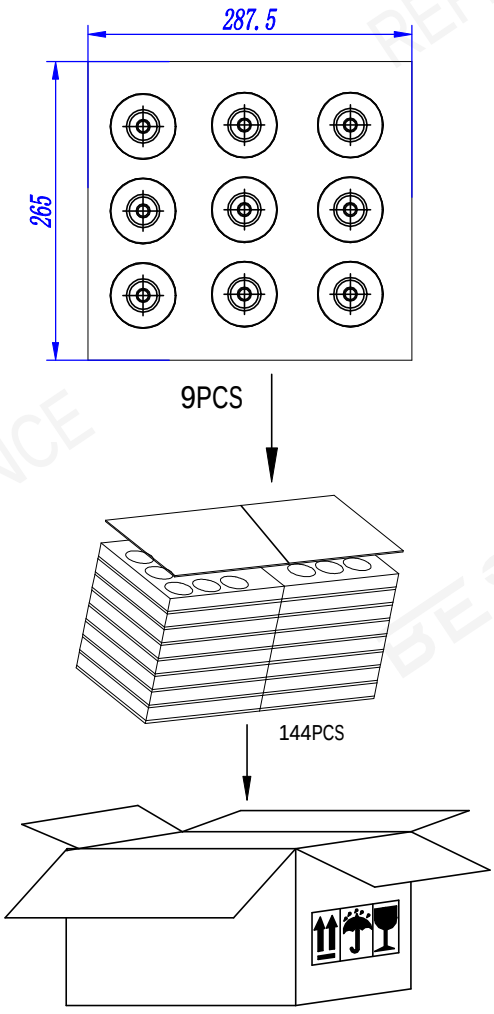

5.2 Packing quantity

1) 9pcs per tray
2) 16 tray per carton
3) 144pcs per carton,
4) carton size: 595X285X290mm

Downloaded from Arrow.com.

6. History change record

Version	Change Items	Date	Drawn	Checked	Approved
A0	First Edition	2021.08.19	Litra.Yang	Peter.Huang	Jason.Zhang

REFERENCE BESTAR

Downloaded from Arrow.com.

7.Important Notice

7.1 The products mustn't be washed

7.2 Store Condition (Packaging)

The products should be stored in the room ,where the temperature/humidity is stable. And avoid suchplaces where there are large temperature changes. Please store the products at the following conditions:

Temperature: -40 to + 85℃ Humidity: 15 to 85% R.H.

7.3 Expire Date on Storage

Expire date (Shelf life) of the products is six months after deliveried under the conditions of a sealed and an unopened package. Please use the products within six months after deliveried.

If you store the products for a long time (more than six months), use carefully because the products may be degraded in the solderability and/or rusty.Please confirm solderability and characteristics for the products regularly.

7.4 Notice on Product Storage

(1) Please do not store the products in a chemical atmosphere (Acids, Alkali, Bases, Organic gas, Sulfides and so on), because the characteristics may be reduced at quality, and/or be degraded in the solderability due to the storage in a chemical atmosphere.

(2) Please use the products immediately after the package is opened, because the characteristics may be reduced at quality, and/or be degraded in the solderability due to storage under the poor condition.

7.5 Rated and Max input power

Rated input power

Rated input power is the maximum (limit) value which can be input to the component intentionally. If the actual input power to component keeps exceeding Rated Input power, it will damage the component acoustic performances and reliability. In the worst case, the component will get broken and no sound.

Max input power

Max input power is the maximum (limit) value for unexpected input power which is caused in the customer's circuit like surge voltage. If the actual input power to component keeps exceeding Maximum input power, it will break the component and cause no sound in a short time. Please note that component will have a risk to get broken if the unexpected input power continues.

The value of input power is set based on the sinusoidal power in the normal speaker use. If the special signal is input to component, the values of Rated and Max input power will be different. Please make a well-investigation at your laboratory in the case of the special signal input.

Downloaded from Arrow.com.