User Manual

GreenPAK Advanced Development Platform

UM-GP-002

Abstract

This user manual provides basic guidelines for the developers to get familiar with the GreenPAK Advanced Development Platform. It gives an overview of the hardware, as well as the functional description of this platform, and shows the example projects using SLG46721.

Downloaded from Arrow.com.

Contents

Abstract **1**

Contents **2**

Figures **3**

Tables **3**

1 Terms and Definitions **4**

2 Introduction **5**

2.1 GreenPAK Designer 5

2.2 Support 5

3 Getting Started **6**

3.1 Introduction 6

3.2 Install Hardware 6

3.3 Install Software 6

3.4 Uninstall Software 6

4 Hardware **7**

4.1 Overview 7

4.2 Functional Description 7

4.2.1 Power Supply 7

4.2.2 USB Communication 8

4.2.3 GND Connections 8

4.2.4 Pin Test Points 8

4.2.5 LEDs 8

4.2.6 Socket Connector 8

4.2.7 Expansion Connector 8

4.2.8 Generators 12

4.2.9 Pins Connectivity 13

5 Example Projects using SLG46721 ..... **15**

5.1 Project: Counter with Clock Enable 15

5.2 Project: LED String with Direction 25

6 Conclusion **31**

Appendix A Electrical Specification **32**

Appendix B Scematic Diagram **34**

Appendix C BOM **38**

Revision History **40**

 © 2022 Renesas Electronics Corporation

Downloaded from Arrow.com.

Figures

Figure 1: GreenPAK Advanced Development Board, Top View 7
Figure 2: USB Interface 8
Figure 3: GreenPAK Expansion Connector Schematic 9
Figure 4: Expansion Connector Control in GreenPAK Designer 9
Figure 5: Socket and Expansion Connector Schematic 10
Figure 6: Internal Power Source 11
Figure 7: Internal Power Source for GreenPAK Chip and External Development Platform 11
Figure 8: Expansion Connector. Pin with Protection Resistor 12
Figure 9: Choosing Generators 12
Figure 10: Managing Buttons 13
Figure 11: Global Linkage Settings 13
Figure 12: Pin Signal Sources/Loading Schematics 14
Figure 13: GreenPAK Designer 15
Figure 14: GreenPAK Components List 16
Figure 15: Pin 20 Mode 17
Figure 16: Look Up Table Properties Configured as AND Gate 18
Figure 17: Look Up Table Properties Configured as NOR Gate 19
Figure 18: Counter Properties 20
Figure 19: GreenPAK Designer 20
Figure 20: GreenPAK Designer, Emulation Tool 21
Figure 21: Signal Generator Connected to V_{DD} Pin 21
Figure 22: Signal Generator Settings 22
Figure 23: Logic Generator Properties 23
Figure 24: Waveform, Triggered on Button Pressed 23
Figure 25: Waveform, no Triggered on Button Released 24
Figure 26: Waveform of the Pulse Width of the Logic Generator and Count End Signal 24
Figure 27: Used Blocks for Current Project 25
Figure 28: Sine Waveform Generated with Signal Generator 25
Figure 29: Emulation Window, with Buffered LED and Signal Generator 26
Figure 30: Pin Properties 27
Figure 31: Pin Properties 28
Figure 32: Look Up Tables Properties Configured as XOR Gate 28
Figure 33: ACMP Properties 29
Figure 34: GreenPAK Designer 29
Figure 35: LED Output with Direction (Pin 2) Low 30
Figure 36: LED Output with Direction (Pin 2) High 30
Figure 37: MCU 34
Figure 38: Analog Switches, Protection Diodes and LEDs 35
Figure 39: Socket and Expansion Connectors 35
Figure 40: Signal Generator 36
Figure 41: Boost Converter USB Interface 36
Figure 42: Port Extender 36
Figure 43: USB Protection 37

Tables

Table 1: Available Connections for Each Test Point 13
Table 2: Pin Configuration for Counter with Clock Enable 17
Table 3: Pin Configuration for LED String with Direction 26

 © 2022 Renesas Electronics Corporation

Downloaded from Arrow.com.

1 Terms and Definitions

ACMP	Analog Comparator
ADC	Analog-to-Digital Converter
BOM	Bill of Materials
GND	Ground
IDE	Integrated Development Environment
LED	Light Emitting Diode
LUT	Look Up Table
OTP	One-Time Programable
PWM	Pulse-Width Modulation
RAM	Random-Access Memory
TP	Test Point
USB	Universal Serial Bus
V_{DD}	Power Supply

© 2022 Renesas Electronics Corporation

Downloaded from Arrow.com.

2 Introduction

Thank you for choosing Renesas Electronics Corporation`s products. The GreenPAK Advanced Development Platform allows you to develop your custom design using GreenPAK mixed signal ICs. You can design your own projects starting from a blank project or by altering the sample projects provided at https://www.renesas.com/.

2.1 GreenPAK Designer

GreenPAK Designer is an easy-to-use full-featured integrated development environment (IDE) that allows you to specify exactly how you want the device to be configured. This provides you a direct access to all GreenPAK device features and complete control over the routing and configuration of a PAK project with just one tool.

With GreenPAK Designer, you can:

- Design the configuration which corresponds to your project needs
- Verify the project using software interface to GreenPAK Advanced Development Platform hardware
- With simple-to-use and intuitive software and hardware tools you can reduce your project development time and get to market faster

To start working with GreenPAK Designer please take the following steps:

- Download and install GreenPAK Designer software
- Configure modules that you will need for your project
- Interconnect and configure modules
- Specify the pin out
- Test your design with the GreenPAK Advanced Development Platform

2.2 Support

Free support for GreenPAK Advanced Development Platform is available online at https://www.renesas.com/.

GreenPAK Designer will automatically notify you when a new version of software is available. For manual updates please go to https://www.renesas.com/software-tool/go-configure-software-hub.

These resources are also available under the **Help** menu of GreenPAK Designer.

 © 2022 Renesas Electronics Corporation

Downloaded from Arrow.com.

3 Getting Started

3.1 Introduction

This chapter describes how to install and configure the GreenPAK Advanced Development Platform. Section 4 provides the details of hardware operation. Section 5 provides instructions on how to create a simple project example.

3.2 Install Hardware

No hardware installation is required for this platform.

3.3 Install Software

GreenPAK Designer software is available free of charge from the Renesas website at https://www.renesas.com/software-tool/go-configure-software-hub page.

3.4 Uninstall Software

The software can be uninstalled in the way typical for your operating system. Please refer to your operating system support documentation if you need the specific instructions or visit Section 2.2 of this document for additional support from Renesas.

© 2022 Renesas Electronics Corporation

Downloaded from Arrow.com.

4 Hardware

4.1 Overview

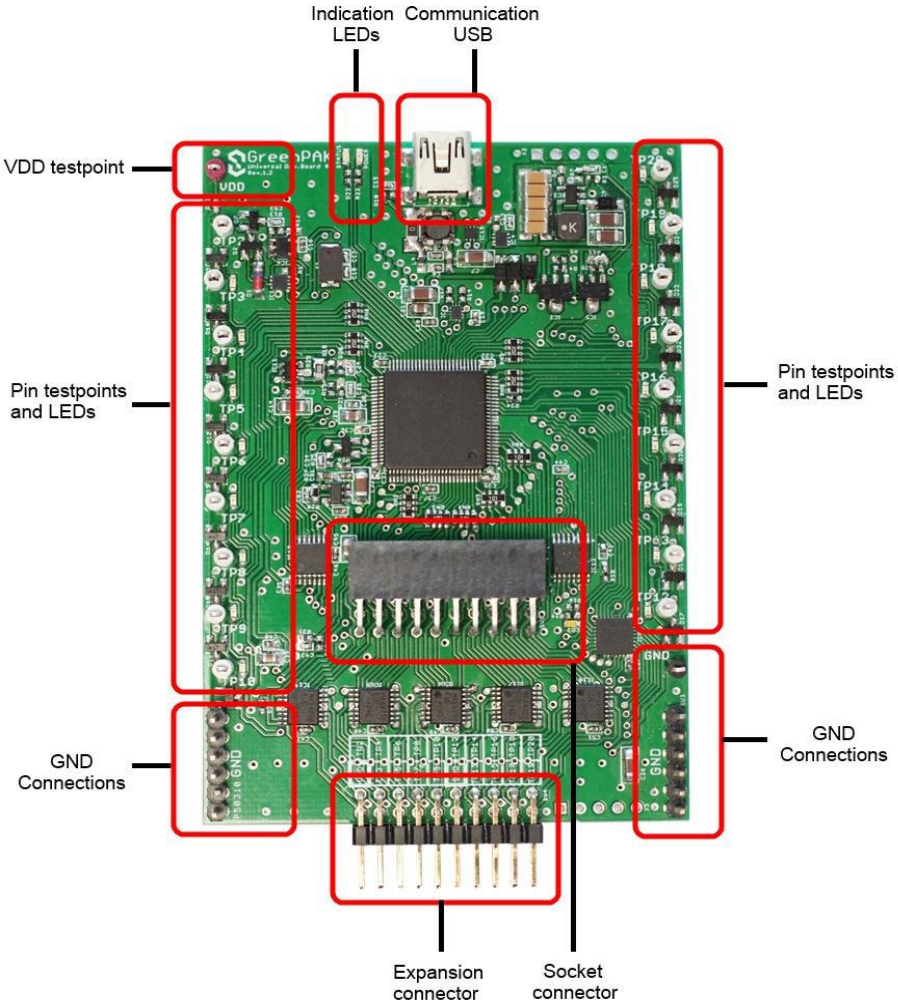

Figure 1: GreenPAK Advanced Development Board, Top View

Note: all test points were designed only for observation of signals on the pins. Please do not try to connect external power/signal source to test points, this will affect GreenPAK Advanced Development Board functionality and may even damage it.

4.2 Functional Description

4.2.1 Power Supply

The main power source of the GreenPAK Advanced Development Board is the USB power line. The Development Board can deliver power from 0 to 5.5 V. To provide this power range, the Development Board is equipped with a boost converter. A Signal generator with a buffered output controls the GreenPAK chip power rail. For more information about GreenPAK electrical specification, please refer to the datasheet.

© 2022 Renesas Electronics Corporation

Downloaded from Arrow.com.

4.2.2 USB Communication

The board has the USB communications interface that uses the USB mini-B connector, as shown in Figure 2. This interface provides communication with the software control tool and supplies power to the platform, as discussed in 4.2.1.

Figure 2: USB Interface

4.2.3 GND Connections

There are 6 GND pins on the left side, 6 pins and 1 header on the right side. These can be used for test equipment (oscilloscope, multimeter, and others) ground reference connection or to connect external test circuitry ground.

4.2.4 Pin Test Points

Each GreenPAK chip pin including V_{DD} has its own observation test point. These test points were designed only for observation. To connect an external signal source use a software-controlled expansion connector.

4.2.5 LEDs

All the pins except Pin 2 can be connected to buffered LEDs. This option allows visualization of digital levels on chip pins. There are 2 selection modes:

- Buffered LED (with high impedance input)
- Inverted Buffered LED (with high impedance input)

This option can be enabled in GreenPAK Designer.

4.2.6 Socket Connector

The GreenPAK Advanced Development Board should be used with a detachable socket board. Its main purpose is to connect the GreenPAK chip to the Development Board. It‘s easy to use the programmed chip in external circuits, or to measure current consumption of the project.

4.2.7 Expansion Connector

This port was designed to connect the GreenPAK Advanced Development Board to external circuits and apply external power, signal sources and loads. It can be used to apply the GreenPAK chip into your custom design with minimal additional tools. For schematic diagram refer to Figure 3.

© 2022 Renesas Electronics Corporation

Downloaded from Arrow.com.

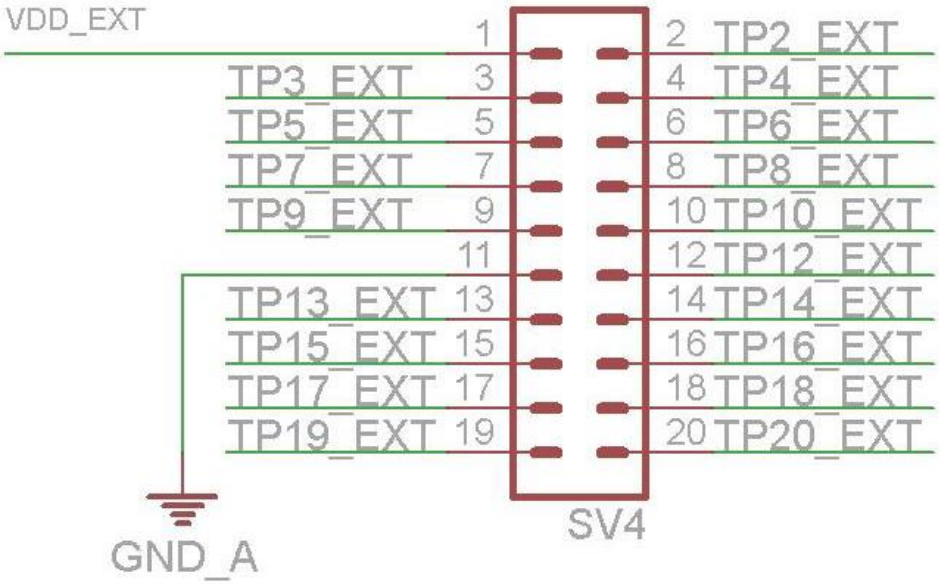

Figure 3: GreenPAK Expansion Connector Schematic

Each pin except Pin 11 (GND) is controlled through an individual analog switch. Expansion connector is a standard 0.1” double row connector. GreenPAK Designer can enable or disable external pins, as it is shown in the Figure 4. The main purpose of the Expansion connector is to connect an external signal/power source safely to the GreenPAK Advanced Development Board.

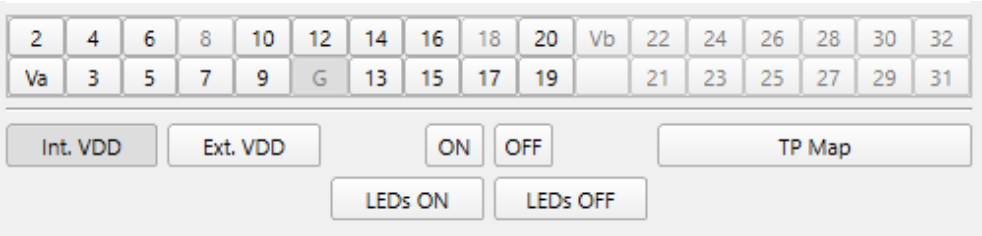

Figure 4: Expansion Connector Control in GreenPAK Designer

Figure 5 demonstrates the schematic diagram of the expansion connector control.

© 2022 Renesas Electronics Corporation

Downloaded from Arrow.com.

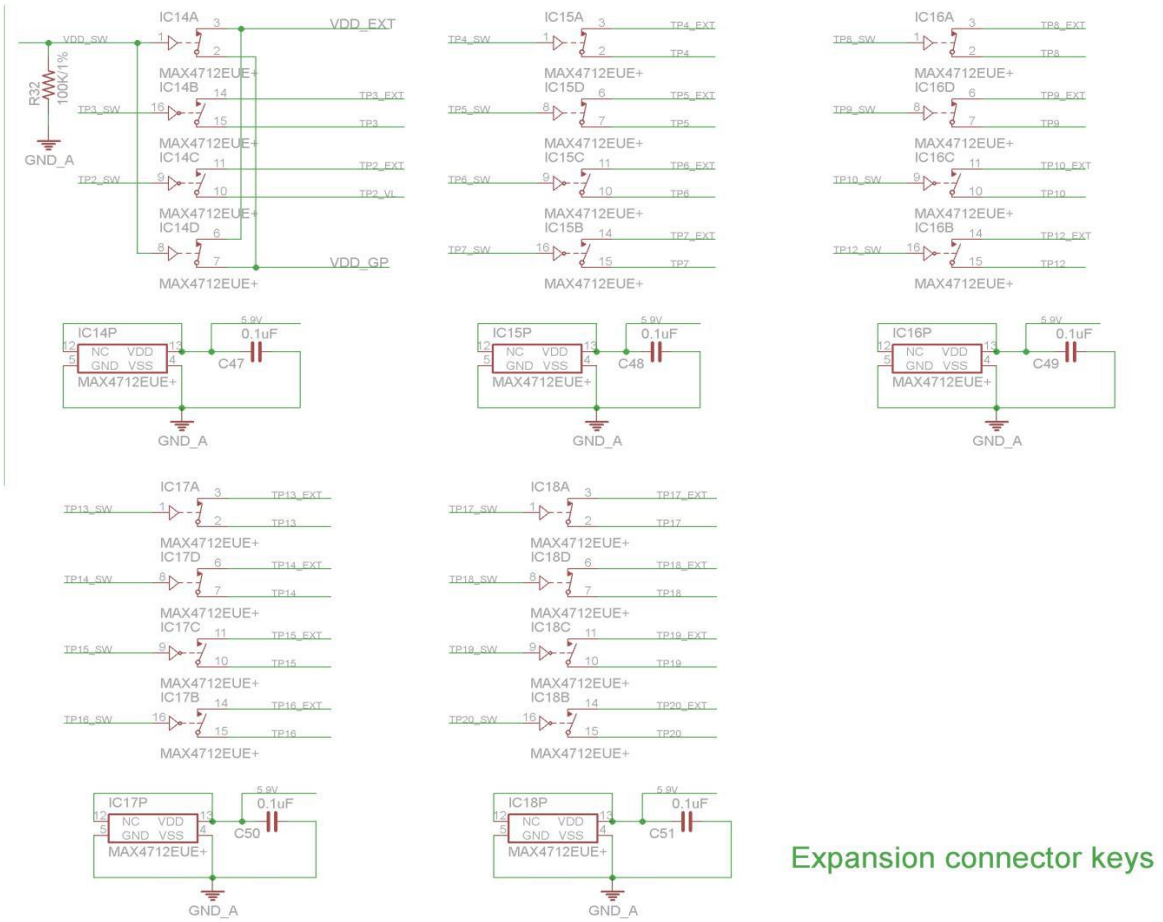

Figure 5: Socket and Expansion Connector Schematic

Expansion connector is enabled only in Emulation mode or Test mode. To enter either of these two modes the GreenPAK chip must be in the socket. When the Test mode button is pressed the software will first read the chip to verify if it was inserted and then configure the GreenPAK Advanced Development Board as set in Emulation Tool window. When the Test mode button is gray then the Development Platform is in Default state and all expansion port switches are open (disconnected). After Emulation button is pressed, the software will automatically perform the following steps:

- check chip presence
- open all expansion port switches (external signals/loads can be left connected to expansion port)
- use internal power and load configuration to the chip
- only for case #3: adjust internal power source to external power level → close external power switch → open internal power switch
- configure Development Board as set in Emulation Tool window

Parasitic effects should be also considered while using the GreenPAK Advanced Development Board in-circuit with analog signals. The entire Development Board circuitry along with the wiring have a significant amount of mutual capacitance and inductance. The detachable socket can also be used for the in-circuit development with programmed chips (the Development Board and socket connectors have the same pinout).

The GreenPAK Advanced Development Board provides three possible ways of using expansion connector:

1) Internal power is used to run the chip, no external power output is needed, external signal sources and loads can be connected between pins and GND.

© 2022 Renesas Electronics Corporation

Downloaded from Arrow.com.

The configuration steps:

- close internal and open external power switch
- close all used expansion port switches in the software
- hit Emulation/Test mode button

This is the common way of using an Expansion connector.

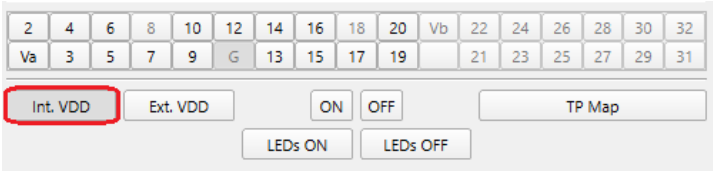

Figure 6: Internal Power Source

2) Internal power is used to run the chip and external circuit (internal power source/sink current is limited to 50 mA).

The configuration steps:

- close internal power switch
- close external power switch
- close all used expansion port switches in the software
- hit Emulation/Test mode button

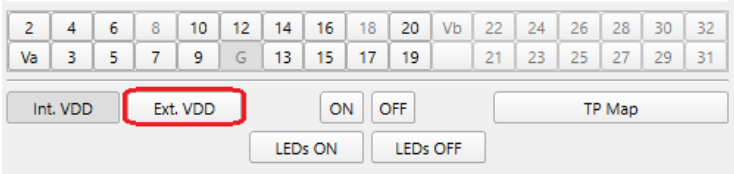

Figure 7: Internal Power Source for GreenPAK Chip and External Development Platform

3) External power is used to run the chip and external circuit (internal source output is in Hi-Z state).

The configuration steps:

- open internal power switch
- close external power switch
- close all used expansion port switches in the software
- hit Emulation/Test mode button (External power should be applied before this step)

Note that the GreenPAK chip has internal OTP memory which is normally loaded into RAM registers at initialization time.“Emulation mode” will bypass this load, and write the updated version of the project directly into the RAM register inside the GreenPAK chip many times, but after power loss all internal data will be lost. When the GreenPAK chip is already programmed the user can use Emulation mode to load another project and test it on the emulation tool in Emulation mode, in that case emulation data will be cleared. The “Emulation” mode is not necessary for checking programmed parts: in this case the “Test mode” is used.

Expansion connector can be divided by types of connections:

1. V_{DD}
2. GND
3. Data connections

The V_{DD} connection enables the user to connect/disconnect external and internal power source. This connection meets next requirements:

- External power range: 1.8 - 5.5 V
- High resistance voltage dividers are not recommended

© 2022 Renesas Electronics Corporation

Downloaded from Arrow.com.

The GND connection is connected directly to the Development Board, and cannot be controlled by GreenPAK Designer.

Data connections are the easiest way to connect external lines to the GreenPAK chip. They are software controlled switches. Every line is connected with a 100 W resistor.

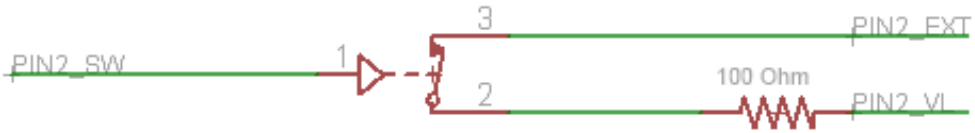

Figure 8: Expansion Connector. Pin with Protection Resistor

4.2.8 Generators

Three types of generator can be connected to a defined TP: Logic generator, Signal generator, or I²C generator. The user can add generator to highlighted green pins with the help of Add button or use a context menu of the TP.

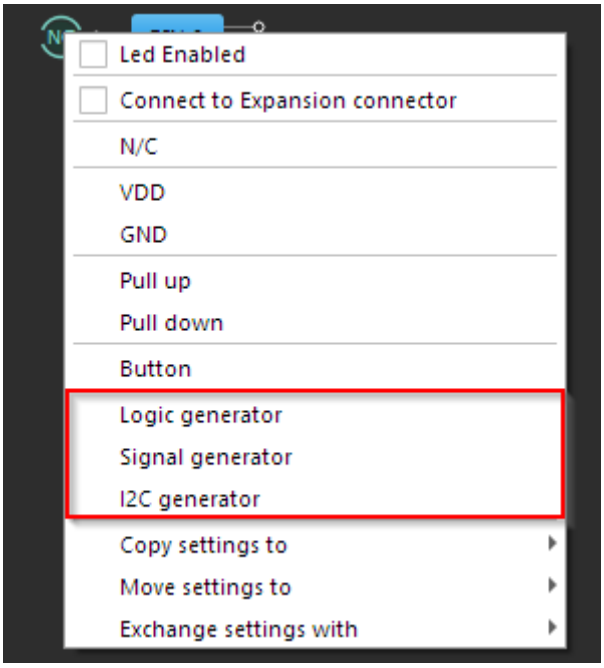

Figure 9: Choosing Generators

Logic generator is used for generating logic pulses.

I²C generator allows the user to create I²C signals based on logic generators. There are two logic generators combined together as SDA and SCL lines. The user can combine predefined I²C settings to generate a needed waveform and choose SCL frequency.

SCL sends I²C-compatible SCL signal to the line. SCL works only in a 'read-only' mode. SCL clock can be configured by choosing predefined frequency. The set of those frequencies depends on the development platform.

SDA sends I²C-compatible SDA signal to the line. In Signal Wizard special editor shows sequence of commands. There are some actions in command editor the user can do.

Signal generator is used to generate analog signals: constant voltage level, sine, trapeze (trapezoid), logic pattern, and user-defined.

© 2022 Renesas Electronics Corporation

Downloaded from Arrow.com.

There is a possibility to start all the generators using buttons at Debugging controls panel.

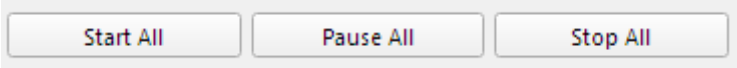

Figure 10: Managing Buttons

Note: these buttons can be controlled only by generators with installed Global Linkage flag.

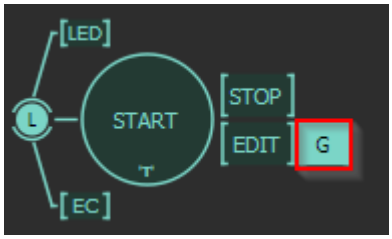

Figure 11: Global Linkage Settings

4.2.9 Pins Connectivity

The GreenPAK Advanced Development Board supports connecting eight types of loads and signal sources. Each source has its own special purpose. The List of available connections for each test point is presented in Table 1.

Table 1: Available Connections for Each Test Point

Pin	Set to V_{DD}	Set to GND	Pull-up	Pull-down	Set Configurable Button	LED	Signal Generator	Logic Generator	I^2C Generator
#	1	2	3	4	5	6	7	8	
V_{DD}	-	-	-	-	-	-	+	-	-
TP2	+	+	+	+	+	-	-	+	+
TP3	+	+	+	+	+	+	-	+	+
TP4	+	+	+	+	+	+	-	+	+
TP5	+	+	+	+	+	+	-	+	+
TP6	+	+	+	+	+	+	+	+	+
TP7	+	+	+	+	+	+	+	+	+
TP8	+	+	+	+	+	+	+	+	+
TP9	+	+	+	+	+	+	-	+	+
TP10	+	+	+	+	+	+	+	+	+
TP12	+	+	+	+	+	+	+	+	+
TP13	+	+	+	+	+	+	+	+	+
TP14	+	+	+	+	+	+	+	+	+
TP15	+	+	+	+	+	+	-	+	+
TP16	+	+	+	+	+	+	-	+	+
TP17	+	+	+	+	+	+	-	+	+
TP18	+	+	+	+	+	+	-	+	+
TP19	+	+	+	+	+	+	-	+	+
TP20	+	+	+	+	+	+	-	+	+

© 2022 Renesas Electronics Corporation

Downloaded from Arrow.com.

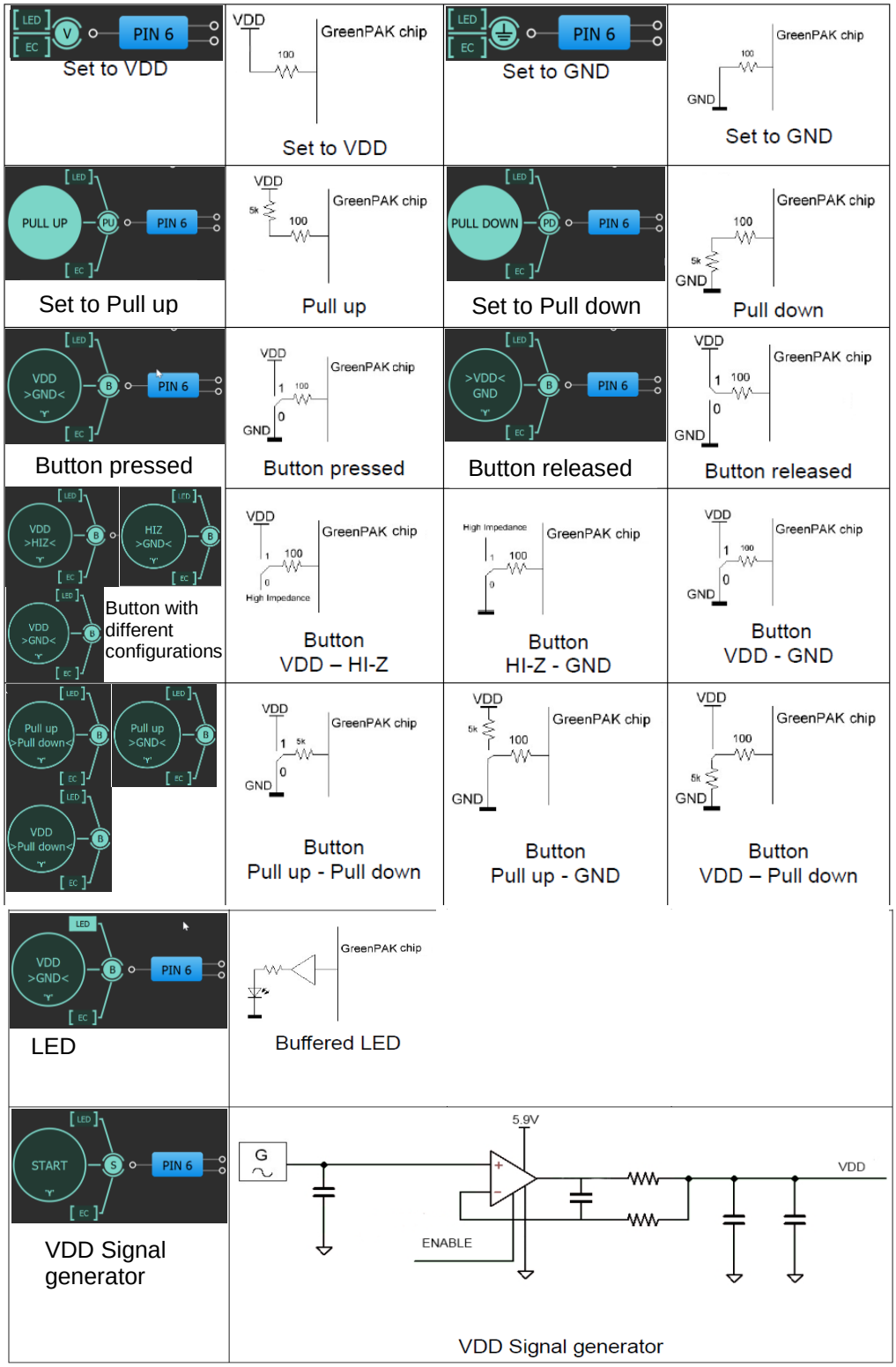

Figure 12: Pin Signal Sources/Loading Schematics

Note: V_{DD} Signal generator works similar to other Signal generators but has wider output voltage range. It can provide maximum supply level of 5.5 V.

© 2022 Renesas Electronics Corporation

Downloaded from Arrow.com.

5 Example Projects using SLG46721

5.1 Project: Counter with Clock Enable

Blocks required:

- 2 digital inputs
- 1 digital output
- 1 Look Up Table with two inputs
- 1 Counter

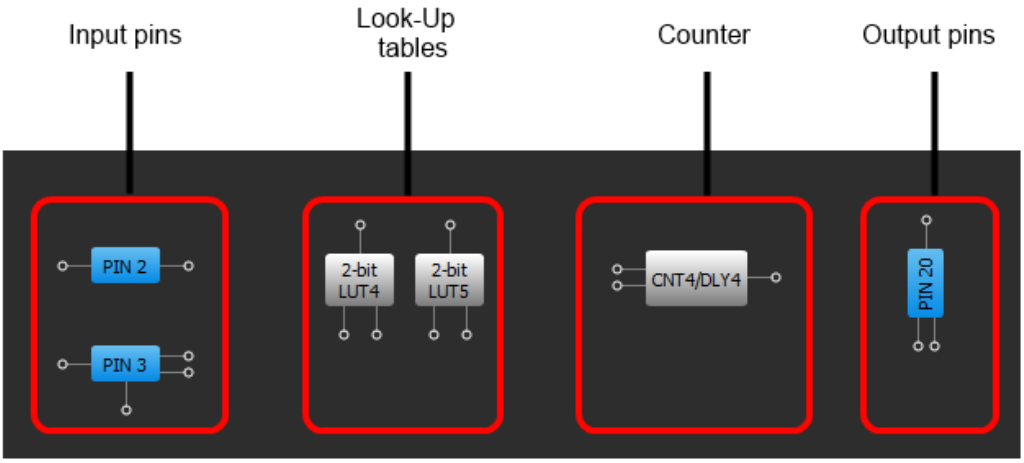

Figure 13: GreenPAK Designer

© 2022 Renesas Electronics Corporation

Downloaded from Arrow.com.

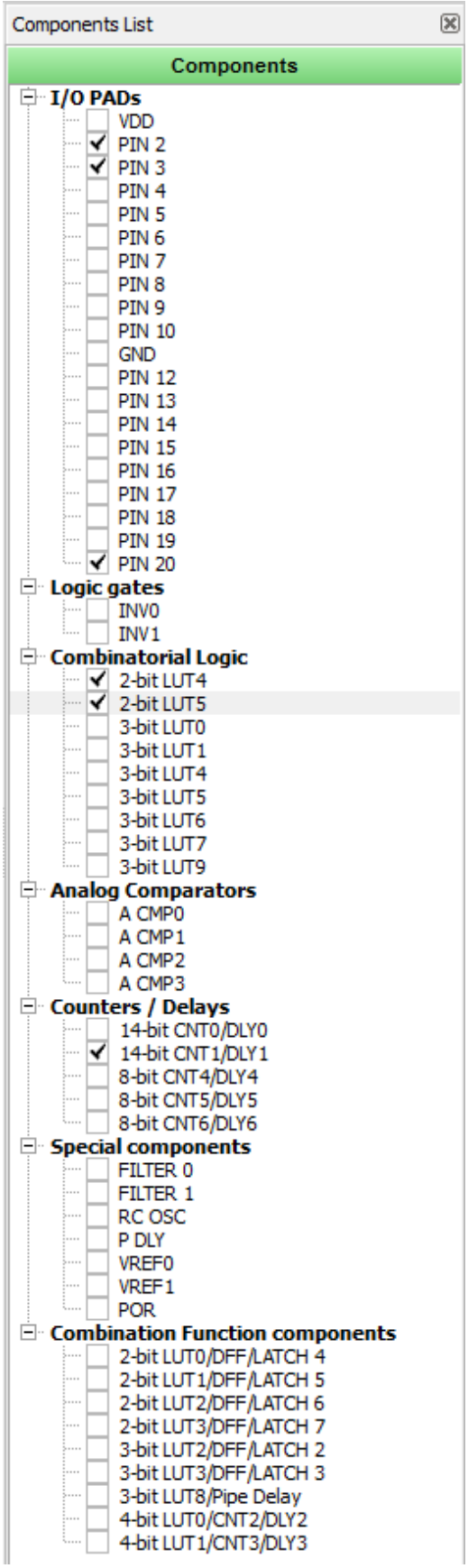

Figure 14: GreenPAK Components List

© 2022 Renesas Electronics Corporation

Downloaded from Arrow.com.

All these components can be found in components list. If there are no components on the work area - make sure this component is enabled.

Table 2: Pin Configuration for Counter with Clock Enable

Pin #	Pin Name	Type	Pin Description
1	V_{DD}	PWR	Supply Voltage
2	Clock	Digital input	Digital input
3	Enable	Digital Input	Digital Input
11	GND	GND	Ground
20	Counter Output	Push-Pull output	Digital input

All components used in the project are shown in Figure 13, next step is to configure selected blocks. Double click on Pin 20 to open “Properties” panel. Select “1x push pull” from the drop-down menu in Pin 20 properties and hit “Apply” button.

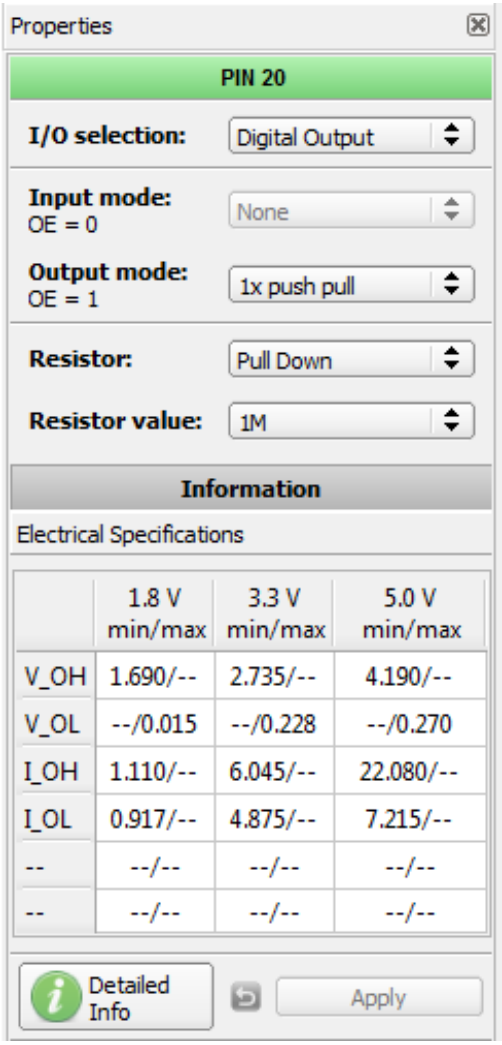

Figure 15: Pin 20 Mode

© 2022 Renesas Electronics Corporation

Downloaded from Arrow.com.

The next component in this design is the Look Up Table. First Look Up Table (LUT4) is used to generate logic “1” only when there are high logic levels on both inputs (AND gate). Select AND gate from “Standard gates” drop-down menu or set table manually. Second Look Up Table (LUT5) is configured as NOR gate. It is used to generate reset signal for counter on Pin 3 falling edge.

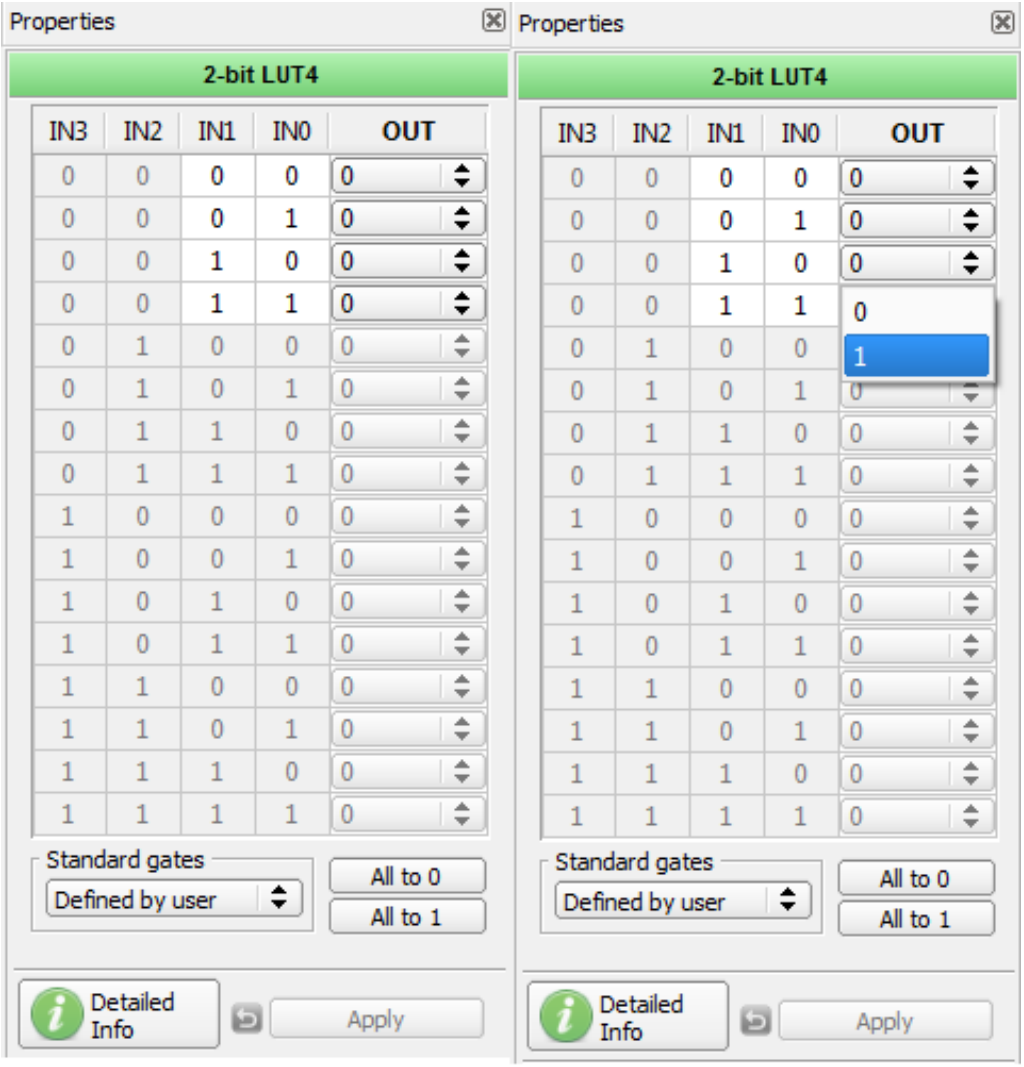

Figure 16: Look Up Table Properties Configured as AND Gate

© 2022 Renesas Electronics Corporation

Downloaded from Arrow.com.

Figure 17: Look Up Table Properties Configured as NOR Gate

© 2022 Renesas Electronics Corporation

Downloaded from Arrow.com.

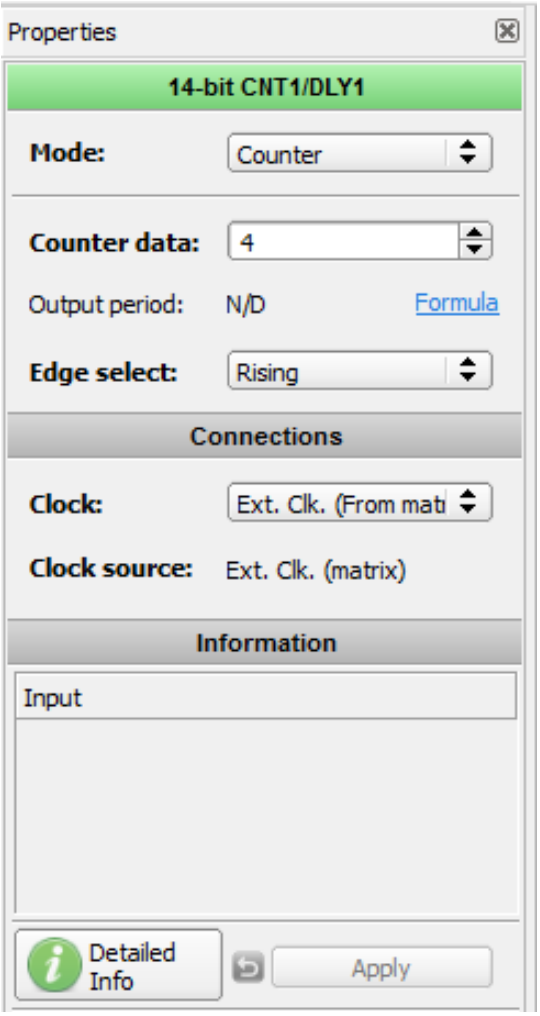

Figure 18: Counter Properties

The final step is to connect used components. Use Wire tool to perform this action. To connect two pins select “Set Wire” and then click on the first and the second pin of the module or modules that you want to connect. The trace will be automatically routed.

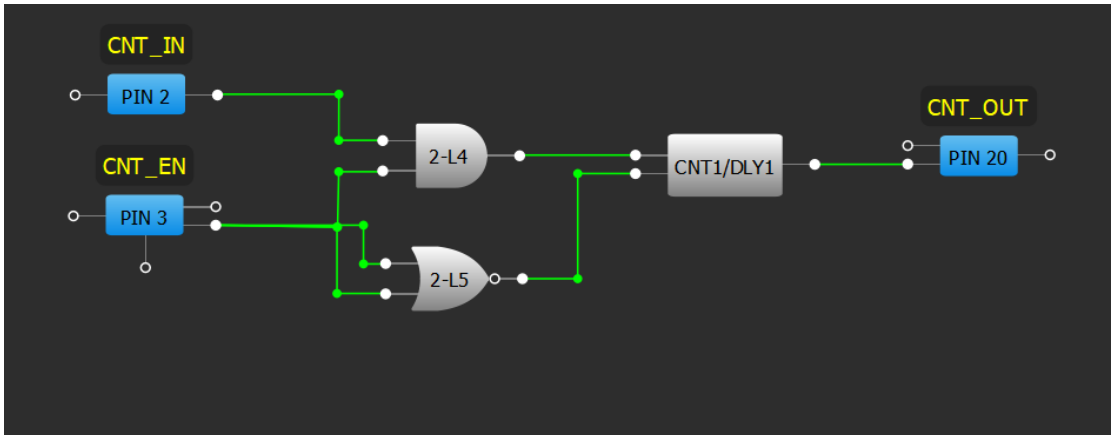

Figure 19: GreenPAK Designer

Figure 19 displays ready project with configured blocks and wire connections.

© 2022 Renesas Electronics Corporation

Downloaded from Arrow.com.

Use the GreenPAK Advanced Development Board to test this project. Connect the GreenPAK Advanced Development Board to the PC and press “Emulation” button. This will load the code of your project to the chip and will enable Test functionality of your Development Board.

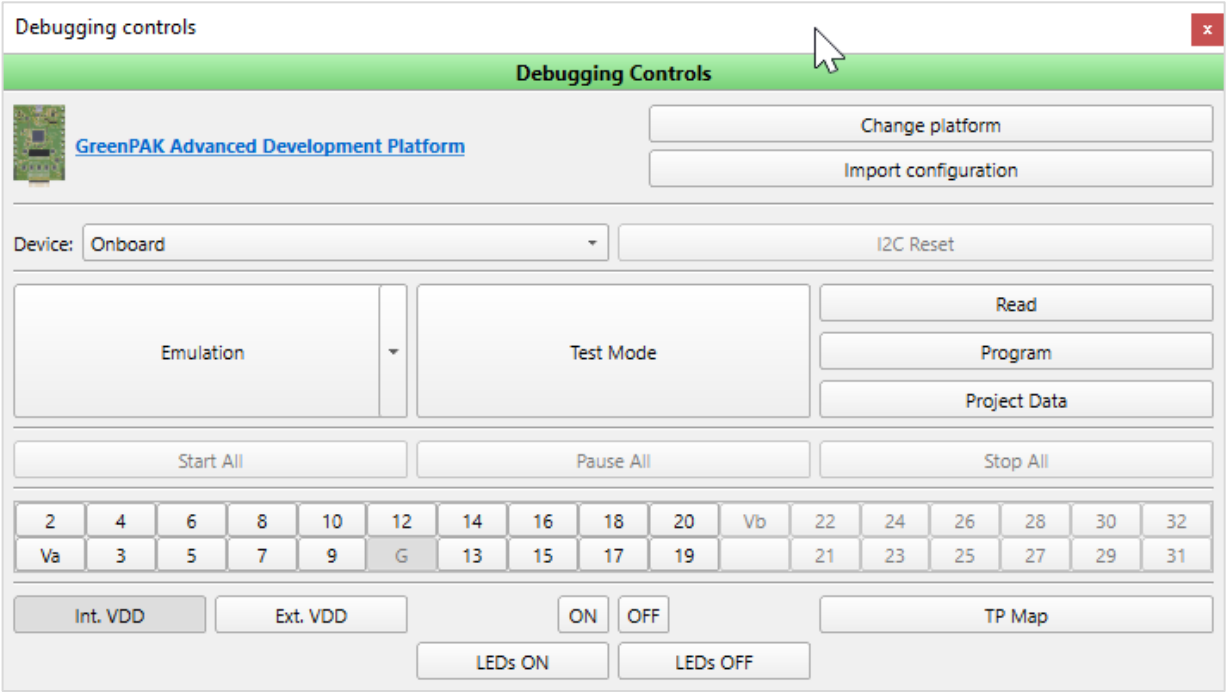

Figure 20: GreenPAK Designer, Emulation Tool

To test this project we will use the following tools:

- Signal generator. Signal generator is applied to V_{DD} pin to power GreenPAK chip
- Logic generator. Logic generator serves as clock source
- Button is a software simulation of the real button. It switches Pin between V_{DD} and GND signal levels
- Inverted buffered LED
- Buffered LED

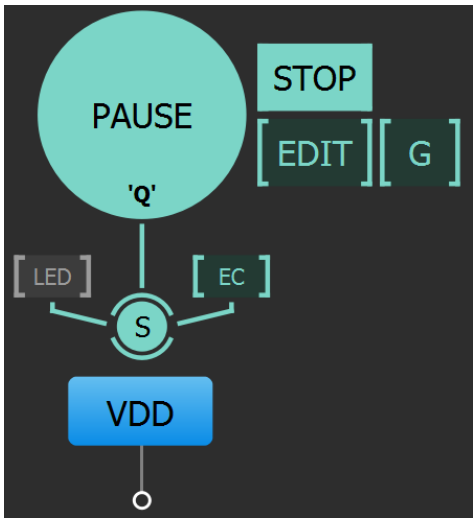

Figure 21: Signal Generator Connected to V_{DD} Pin

Signal generator is presented as a power source for GreenPAK chip. It's configured to output source constant 3.3 V.

© 2022 Renesas Electronics Corporation

Downloaded from Arrow.com.

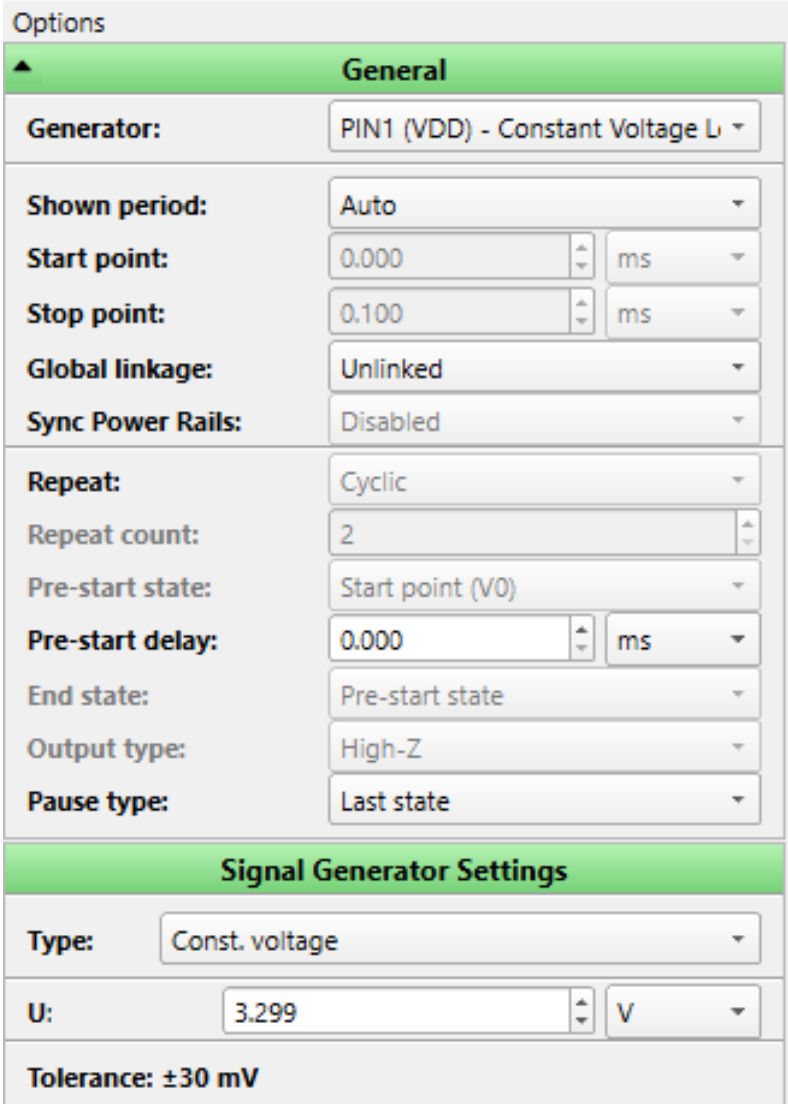

Figure 22: Signal Generator Settings

The purpose of the logic generator is to provide clock pulses for the Counter block. It is configured for 10 Hz clock source as shown in the Figure 23.

© 2022 Renesas Electronics Corporation

Downloaded from Arrow.com.

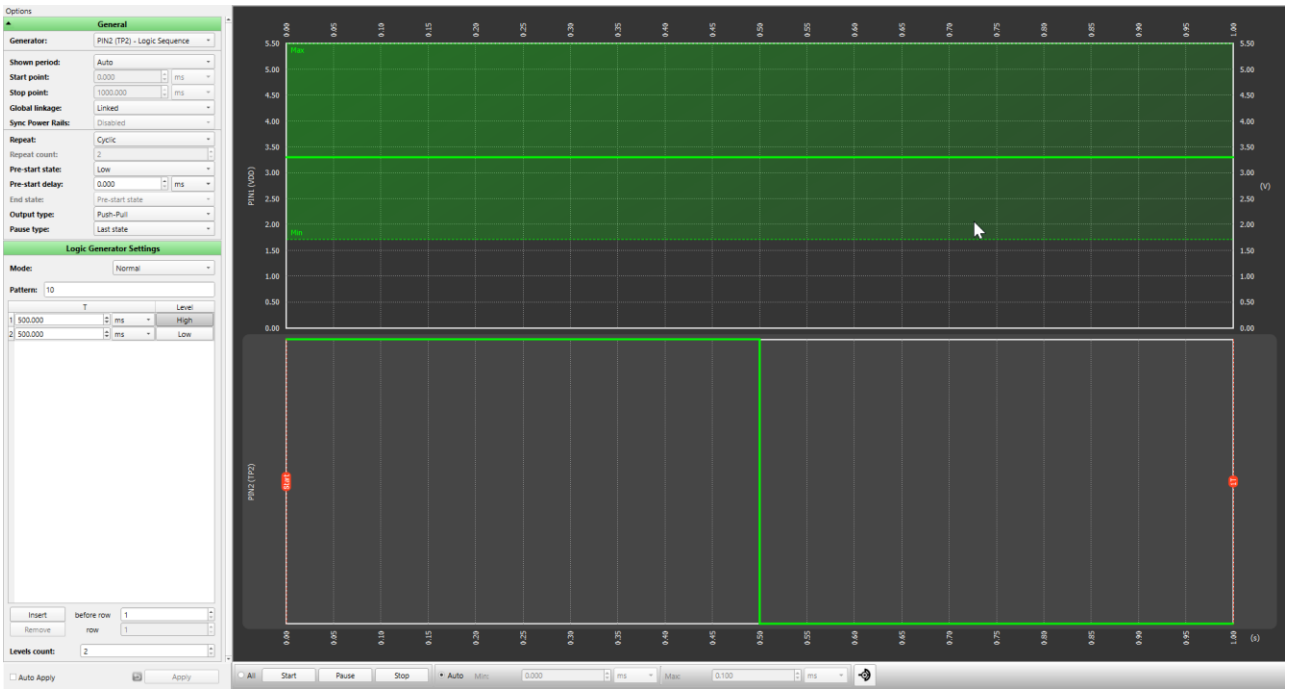

Figure 23: Logic Generator Properties

Functionality Waveform

Channel 1 (yellow/top) – Logic generator
Channel 2 (light blue/2nd line) – Button, 1 - enable Counter; 0 - disable Counter
Channel 3 (magenta/3rd line) – Counter output

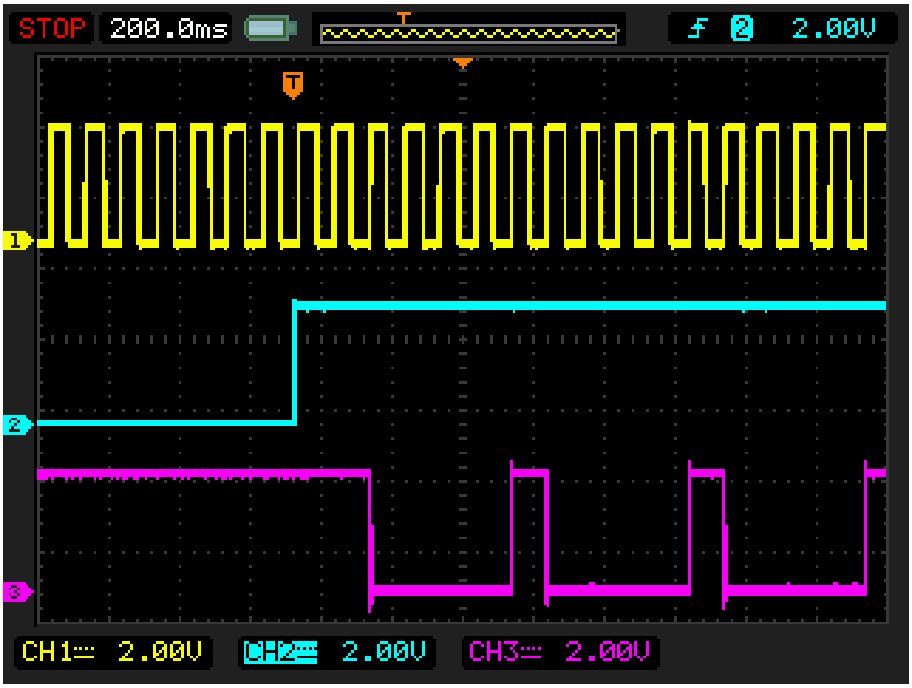

Figure 24: Waveform, Triggered on Button Pressed

Channel 1 (yellow/top) – Logic generator
Channel 2 (light blue/2nd line) – Button, 1 - enable Counter; 0 - disable Counter
Channel 3 (magenta/3rd line) – Counter output

© 2022 Renesas Electronics Corporation

Downloaded from Arrow.com.

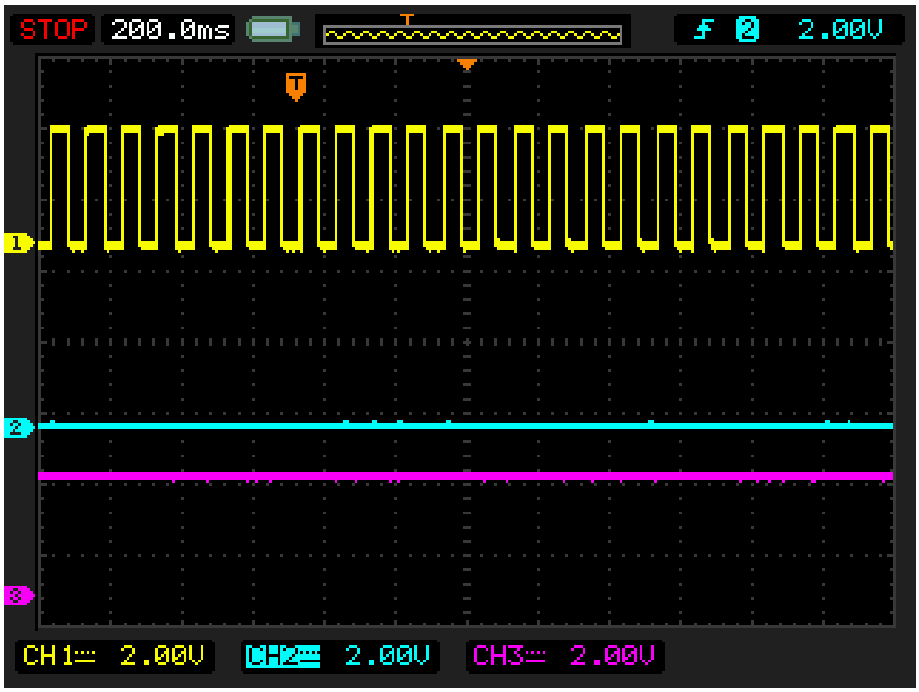

Figure 25: Waveform, no Triggered on Button Released

Channel 1 (yellow/top) – Logic generator
Channel 2 (light blue/2nd line) – Button, 1 - enable Counter; 0 - disable Counter
Channel 3 (magenta/3rd line) – Counter output

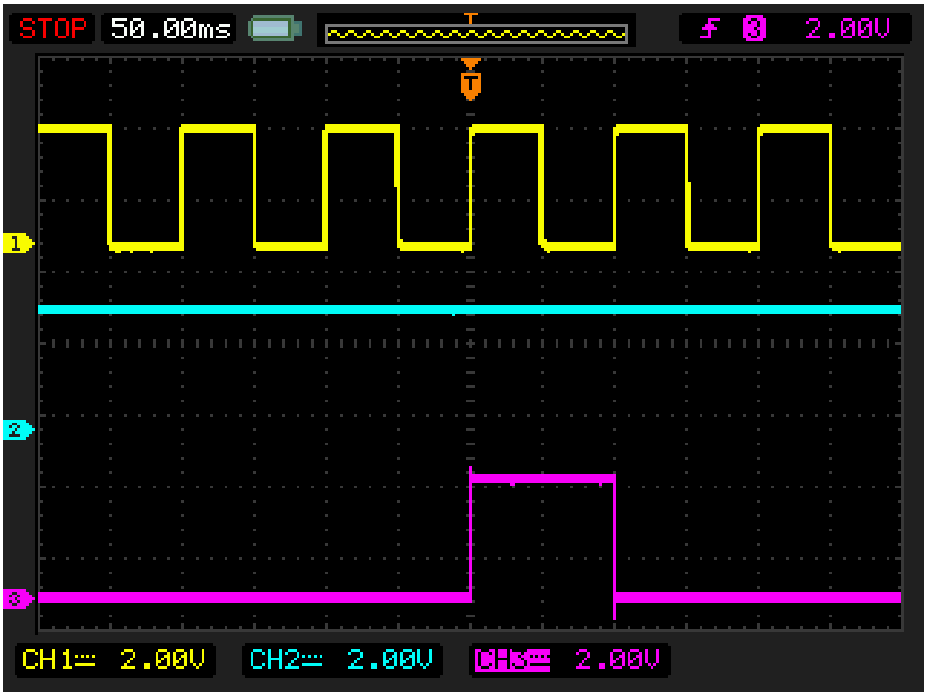

Figure 26: Waveform of the Pulse Width of the Logic Generator and Count End Signal

As shown in Figure 25 and Figure 26 Counter works only when the button is pressed.

© 2022 Renesas Electronics Corporation

Downloaded from Arrow.com.

5.2 Project: LED String with Direction

For this project we will need:

- Analog pin for input data
- Digital pin for PWM output
- ADC block
- PWM block

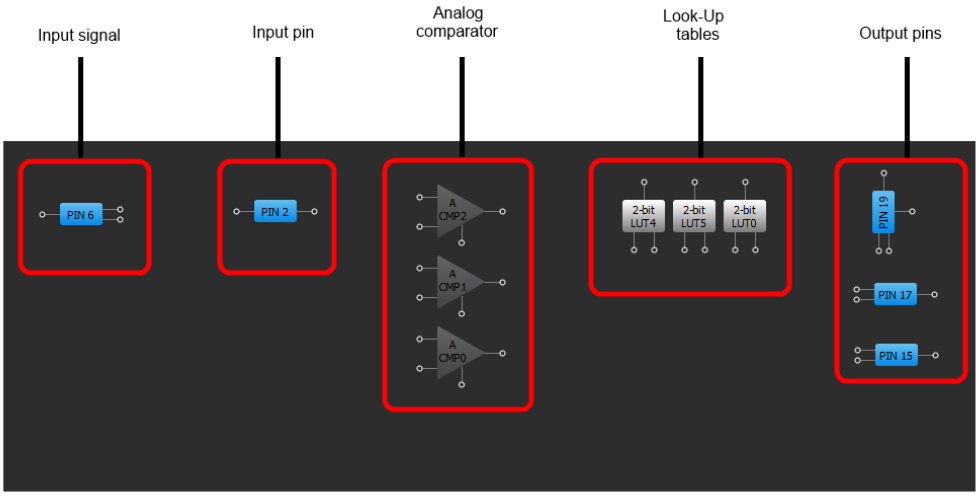

Figure 27: Used Blocks for Current Project

For testing this project, the Signal generator with sine waveform is used.

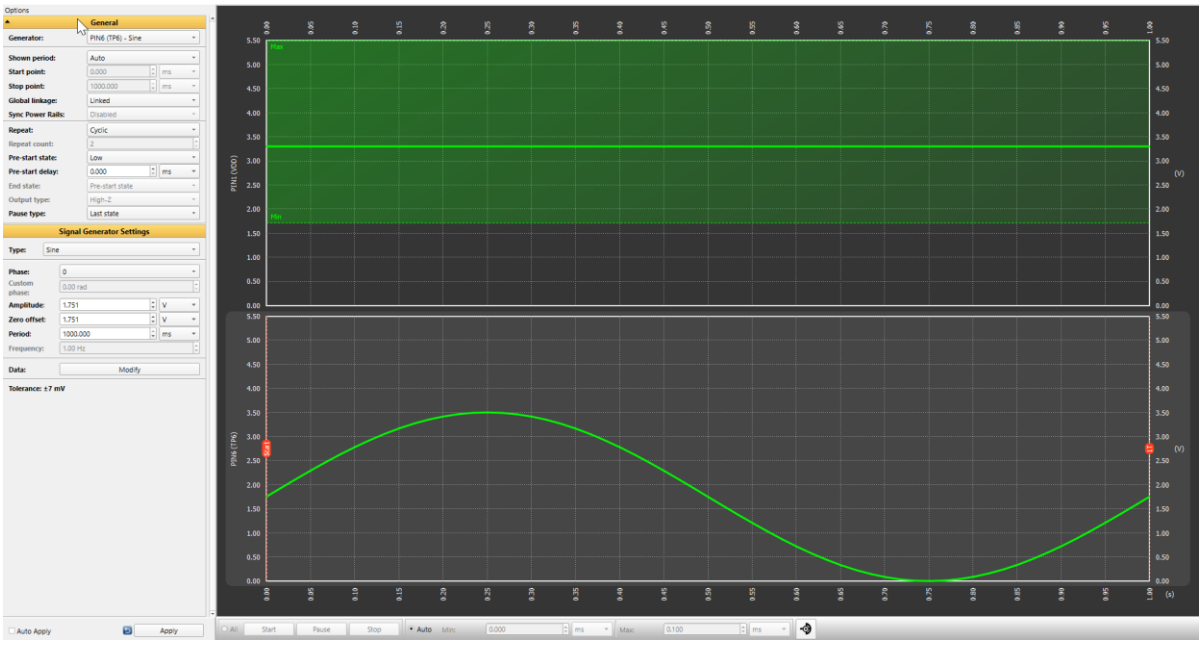

Figure 28: Sine Waveform Generated with Signal Generator

© 2022 Renesas Electronics Corporation

Downloaded from Arrow.com.

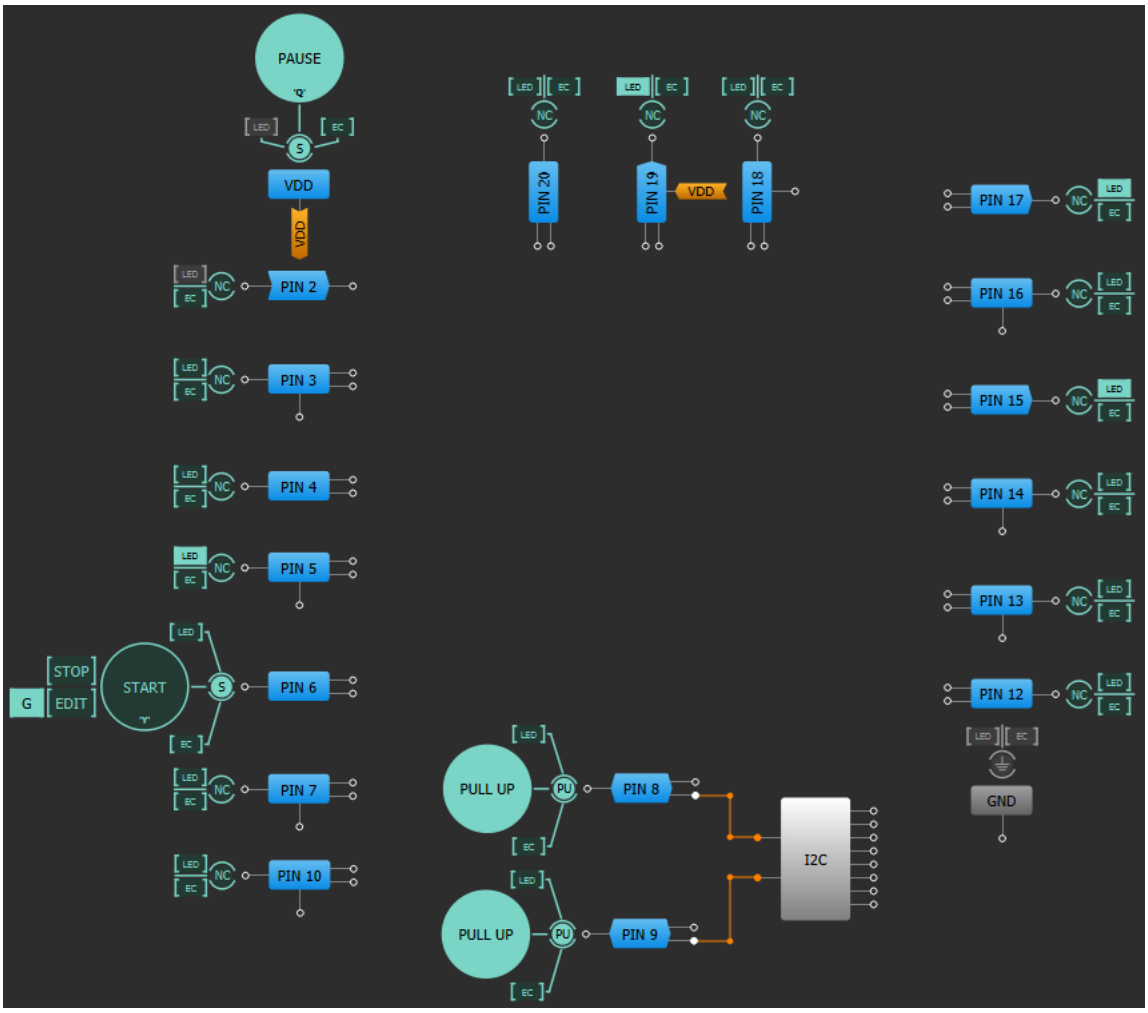

Figure 29: Emulation Window, with Buffered LED and Signal Generator

Table 3: Pin Configuration for LED String with Direction

Pin #	Pin Name	Type	Pin Description
1	V_{DD}	PWR	Supply Voltage
2	DIRECTION	Input	Controls direction
6	SIGNAL	Input	Analog Input
11	GND	GND	Ground
15	LED_A	Output	LED
17	LED_B	Output	LED
19	LED_C	Output	LED

© 2022 Renesas Electronics Corporation

Downloaded from Arrow.com.

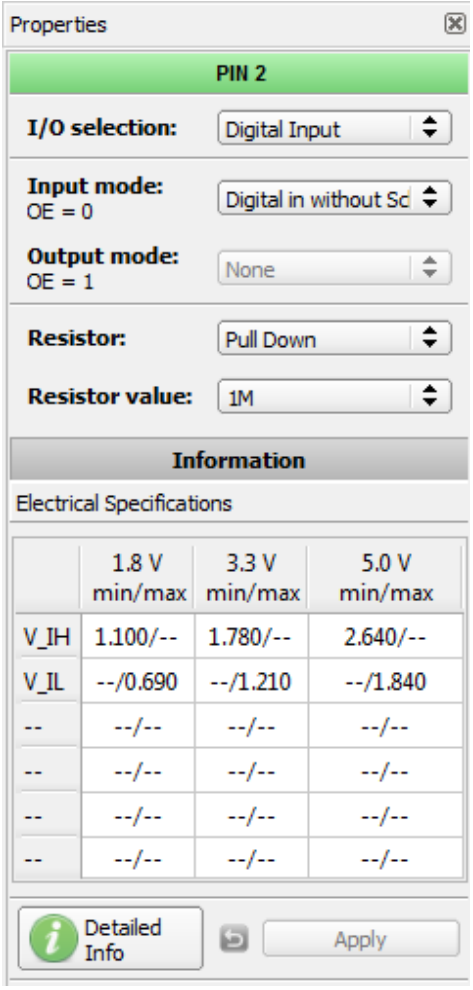

Figure 30: Pin Properties

Pin 6 is configured as analog input-output. This pin is used for generating SINE waveform.

© 2022 Renesas Electronics Corporation

Downloaded from Arrow.com.

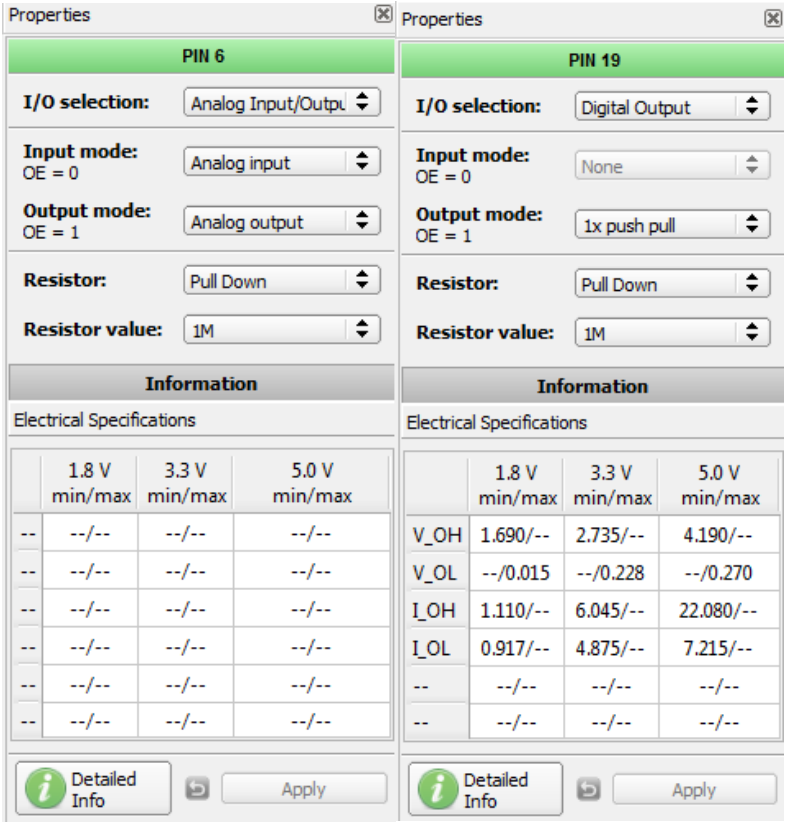

Figure 31: Pin Properties

Figure 32: Look Up Tables Properties Configured as XOR Gate

© 2022 Renesas Electronics Corporation

Downloaded from Arrow.com.

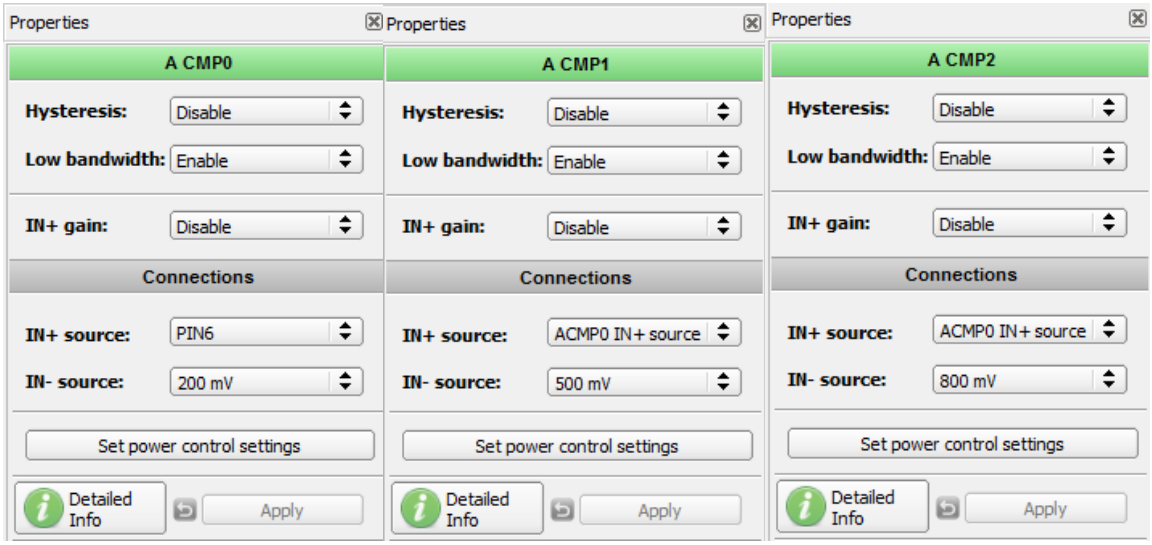

Figure 33: ACMP Properties

Pins 15, 17, 19 - configured as output with Push-Pull 1x. They are used for testing purpose.

All comparators positive inputs are connected to the Pin 6 analog input. When the voltage on the positive input is higher than the voltage on the negative input, comparator will set logic “1” on its output. ACMP0 positive input is 200 mV, ACMP1 is 500 mV, and ACMP2 is 800 mV, creating 4 states:

- All LEDs are off
- LED_A is on
- LED_A and LED_B are on
- All LEDs are on

If Pin 2 logic level is set to “1”, these states will transform into:

- All LEDs are on
- LED_A and LED_B are on
- LED_A is on
- All LEDs are off

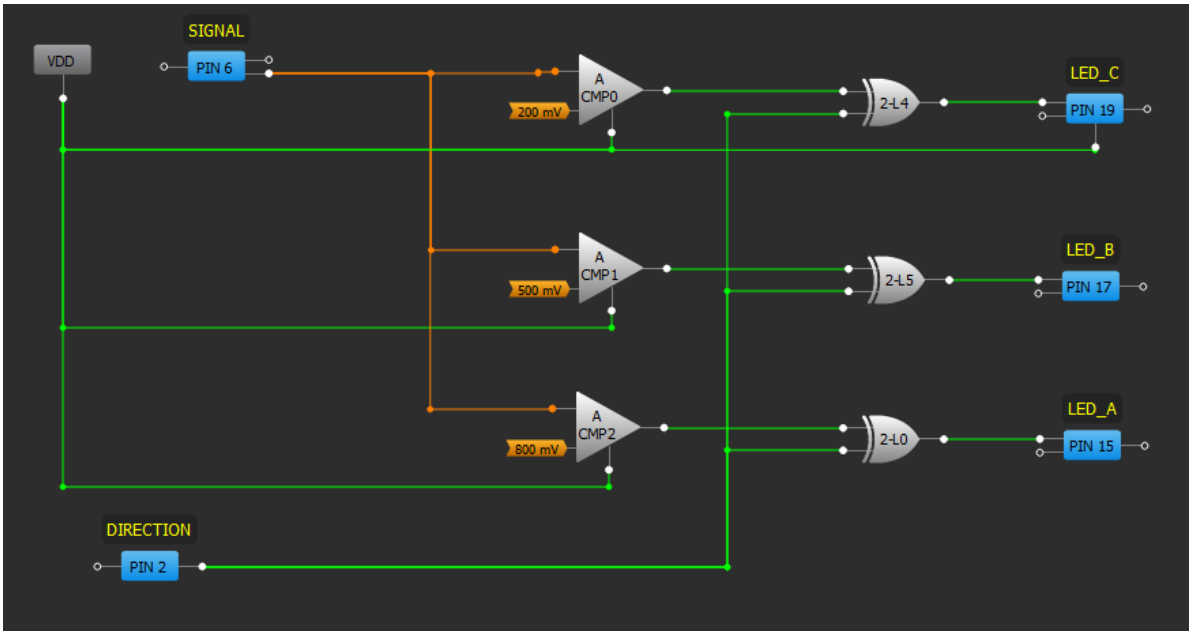

Figure 34: GreenPAK Designer

© 2022 Renesas Electronics Corporation

Downloaded from Arrow.com.

Functionality Waveform
Channel 1 (yellow/top) – Direction
Channel 2 (light blue /2nd line) – LED_A
Channel 3 (magenta/3rd line) – LED_B
Channel 4 (blue / 4rth line) – LED_C

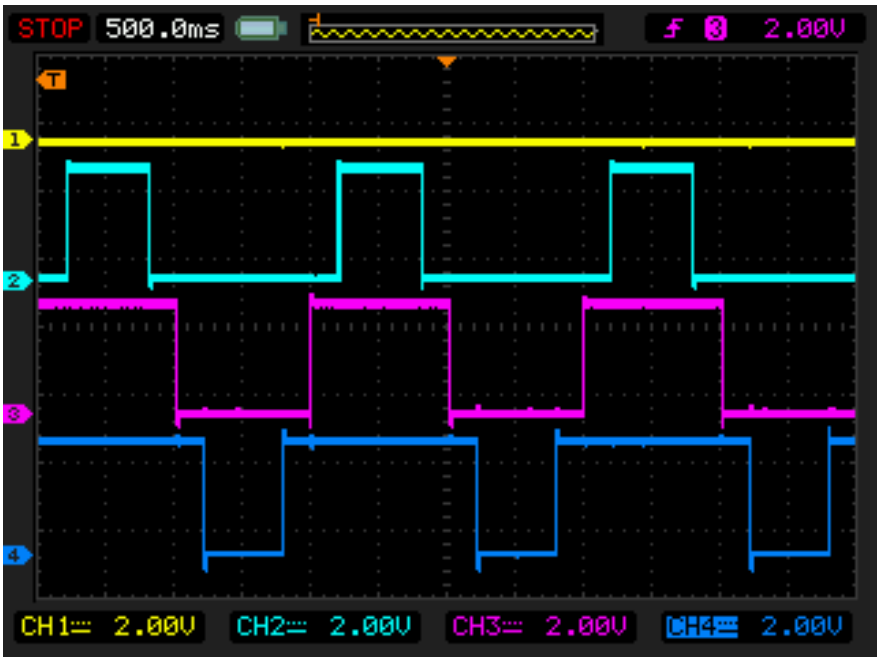

Figure 35: LED Output with Direction (Pin 2) Low

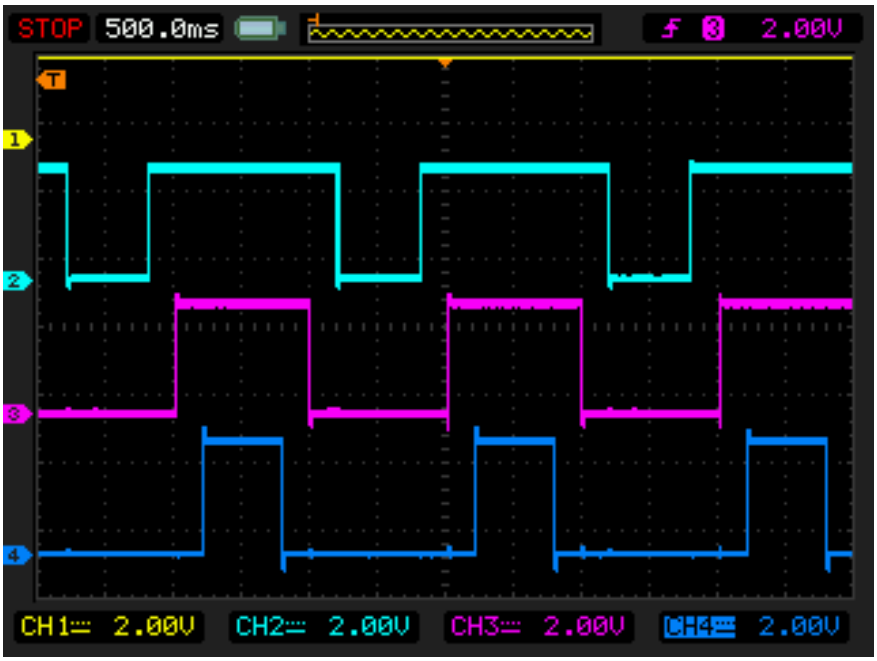

Figure 36: LED Output with Direction (Pin 2) High

The PWM duty cycle rises up to 100% when analog signal is close to 1 V.

© 2022 Renesas Electronics Corporation

Downloaded from Arrow.com.

6 Conclusion

This Development Platform is a truly versatile tool. It allows the designer to create a custom project within minutes, without using additional devices (except oscilloscope).

For more information please visit our website https://www.renesas.com/.

© 2022 Renesas Electronics Corporation

Downloaded from Arrow.com.

Appendix A Electrical Specification

Mode	Parameter	Min	Typ	Max	Units
General	Test Point Capacitance	19.5	--	--	pF
	Input Leakage Current	--	--	14	nA
	Max Current through Protection Diode to V_{DD}	--	--	200	mA
	Ripple & Noise	20	--	40	mVp-p
V_{DD} Power Supply Generator (V_{DD})	Voltage Range	1.5	--	5.5	V
	V_{DD} Max Current	--	--	70	mA
	Voltage Output Total Error	--	±30	--	mV
Logic generator	Number of Channels (TP2 to TP10, TP12 to TP20)	--	--	18	--
	Output Voltage High	--	V_{DD}	--	V
	Output Voltage Low	0.4	--	0.8	V
	Max Current per TP	--	--	30	mA
	Max Total Current per TPs	--	--	250	mA
	Rise Time	4	--	75	ns
	Fall Time	4	--	60	ns
	Full-Scale Settling Time (0 to 5.5 V)	30	40	75	ns
	Max Output Frequency	0.152	--	5000	Hz
	Max Number of Points	--	--	180	--
	Sample Rate	--	10	--	kSPS
Signal Generator	Number of Channels (TP3 to TP10, TP12 to TP18)	--	--	15	--
	Output Voltage Range	0	--	5.5	V
	DC Output Impedance	--	0.5	--	Ω
	Short-Circuit Current	--	--	30	mA
	Min Output Voltage	--	--	19	mV
	Output Total Error	--	--	±7	mV
	Output Frequency (SINE)	0.01	--	2500	Hz
	Max Number of Points	--	--	60	--
	Sample Rate	--	10	--	kSPS
Virtual Button, V_{DD}/GND, Pull-Up/Down Driver	Output Level High	--	V_{DD}	--	--
	Output Level Low	--	GND	--	--
	Strong Drive (V_{DD}/GND) Resistance	--	100	--	Ω
	Pull-Up/Down Resistance	3.5	5.6	8.5	kΩ
Expansion Connector Switch	Max Voltage	--	--	5.5	V
	Continuous Current through Any Terminal	--	--	±30	mA
	Switch On-Resistance	--	20	40	Ω
	External V_{DD} Switch On-Resistance	--	10	20	Ω
	On Leakage Current	-20	--	20	nA

© 2022 Renesas Electronics Corporation

Downloaded from Arrow.com.

Mode	Parameter	Min	Typ	Max	Units
Expansion Connector Switch	Off Leakage Current	-10	--	10	nA
	Bandwidth	--	--	10	MHz
	Max V_{DD} Supply from External Source	--	--	5.66	V

© 2022 Renesas Electronics Corporation

Downloaded from Arrow.com.

Appendix B Scematic Diagram

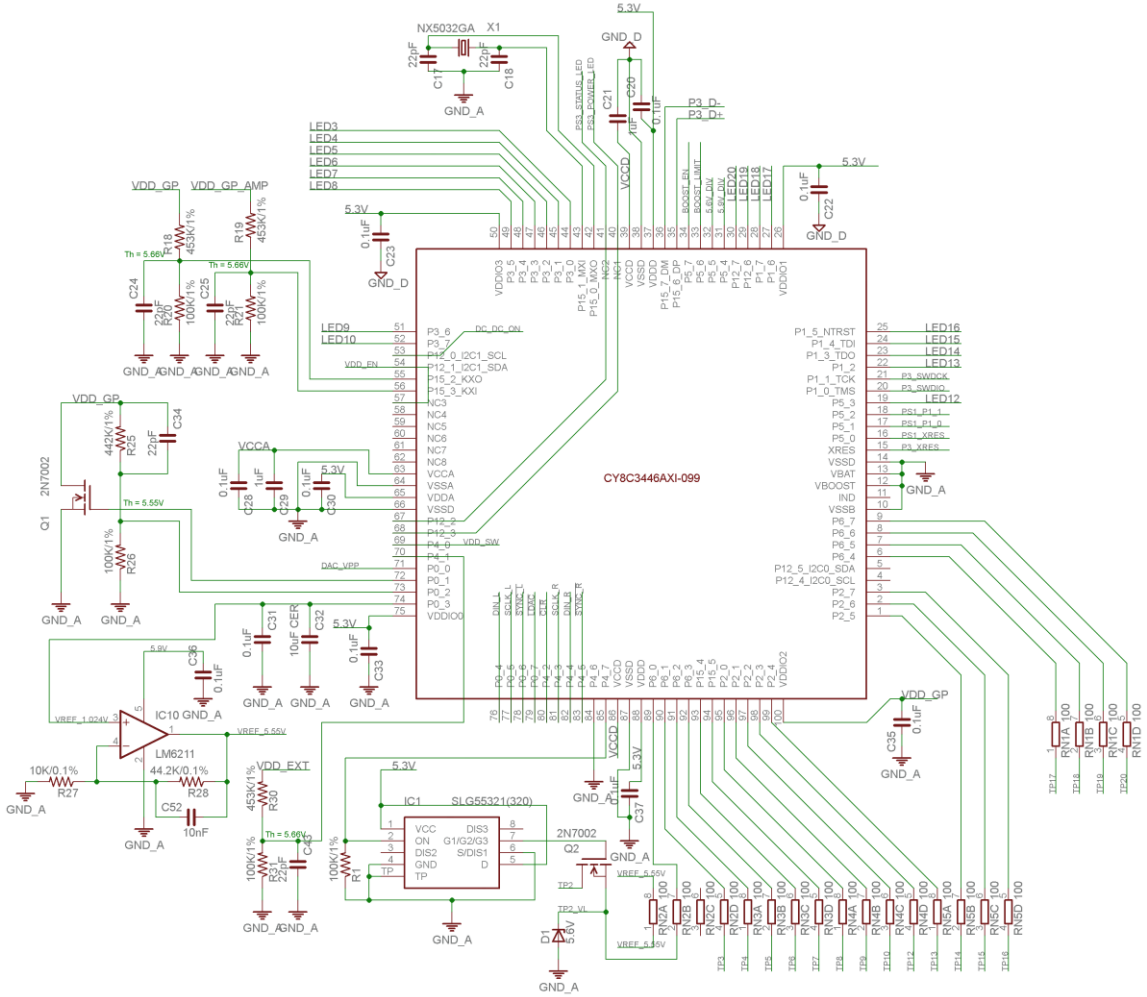

Figure 37: MCU

© 2022 Renesas Electronics Corporation

Downloaded from Arrow.com.

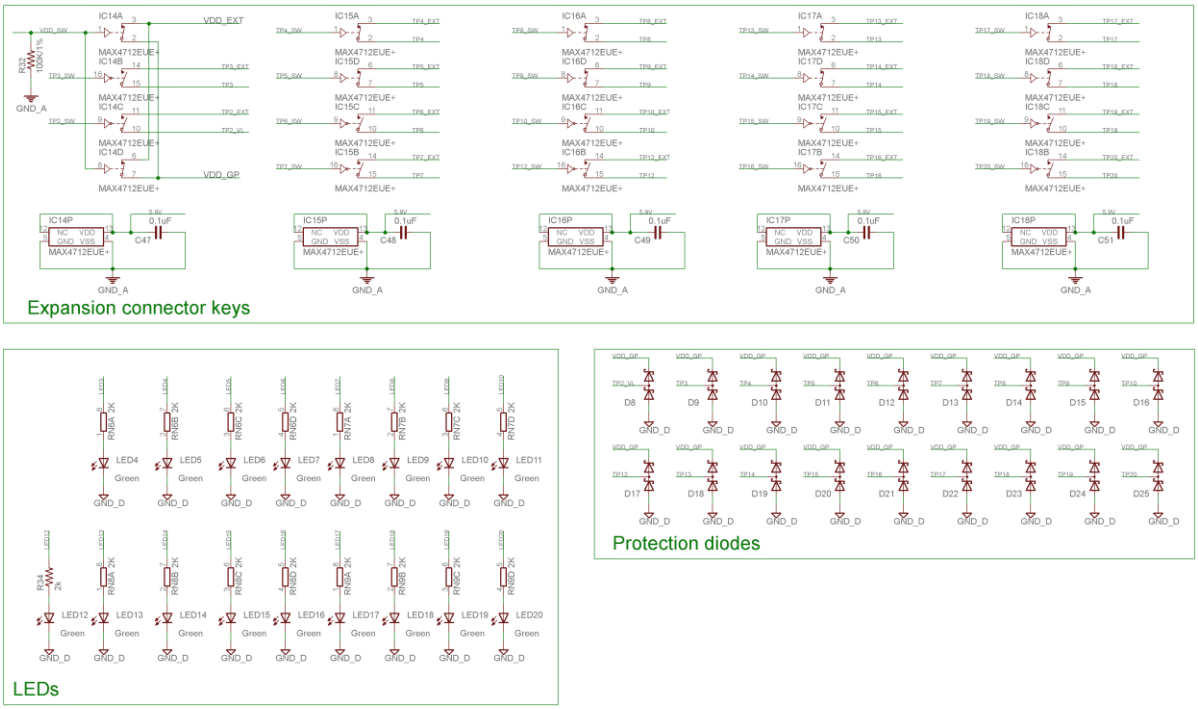

Figure 38: Analog Switches, Protection Diodes and LEDs

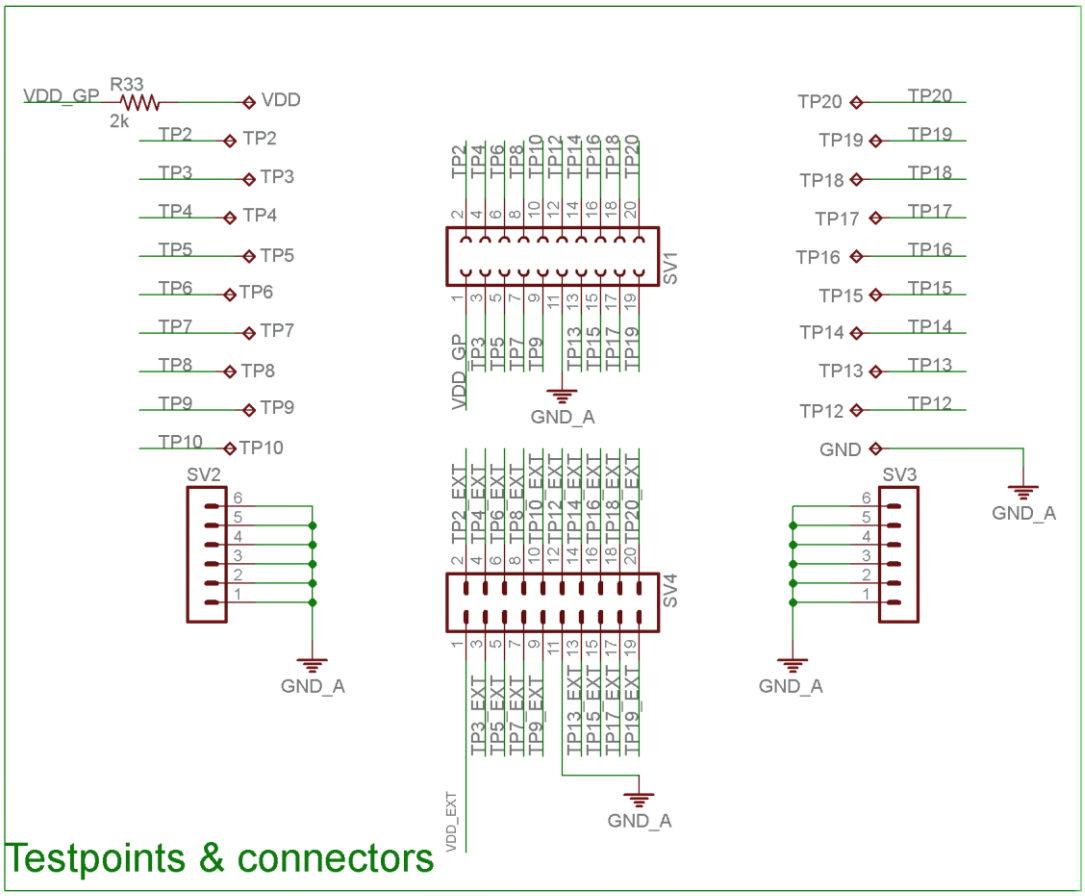

Figure 39: Socket and Expansion Connectors

© 2022 Renesas Electronics Corporation

Downloaded from Arrow.com.

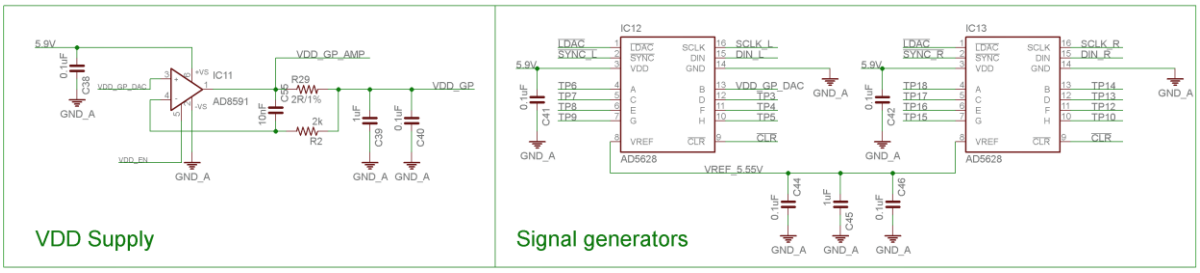

Figure 40: Signal Generator

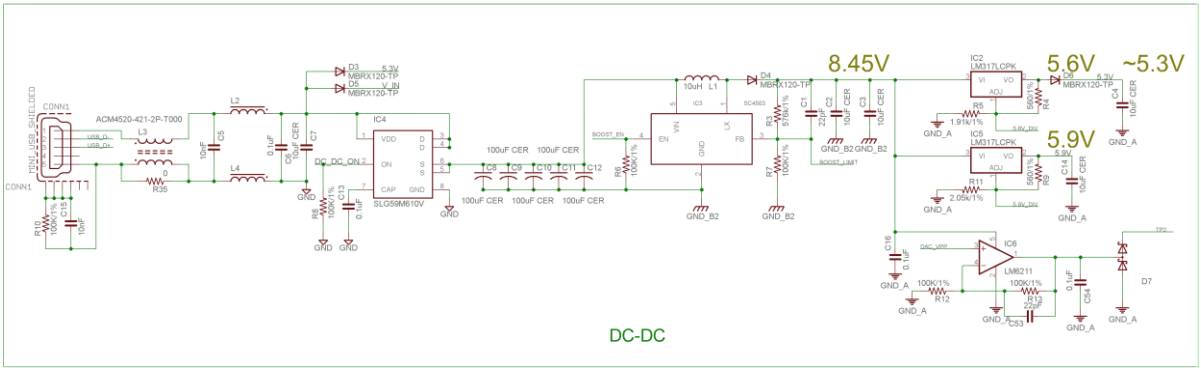

Figure 41: Boost Converter USB Interface

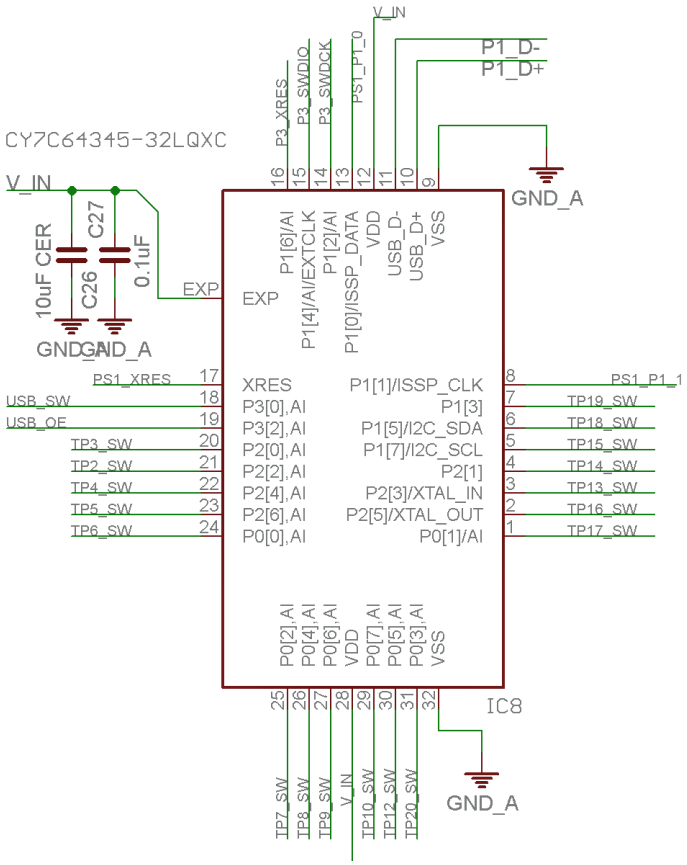

Figure 42: Port Extender

© 2022 Renesas Electronics Corporation

Downloaded from Arrow.com.

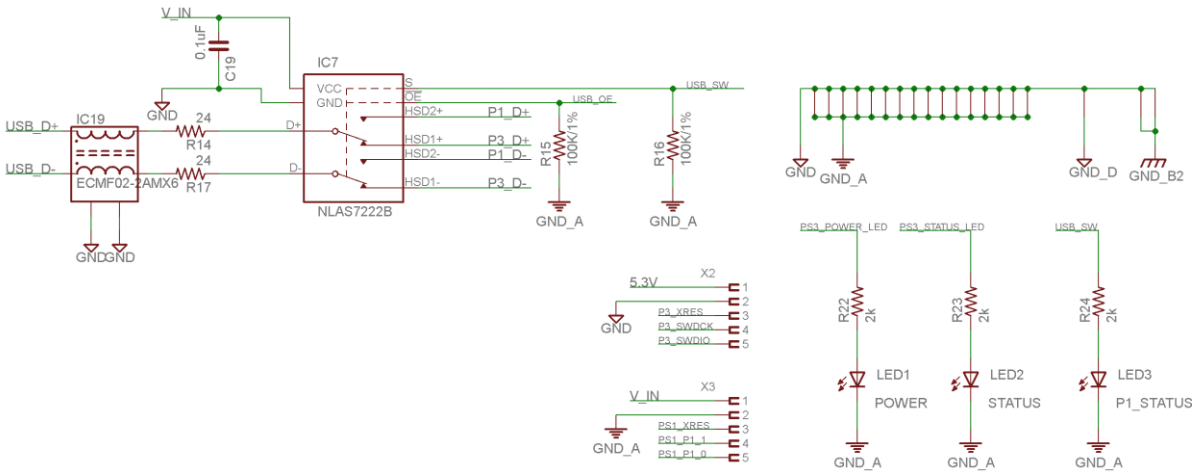

Figure 43: USB Protection

© 2022 Renesas Electronics Corporation

Downloaded from Arrow.com.

Appendix C BOM

#	Items	Package	Quantity per Development Board	Symbol
1	N/A	TQFN20	1	
2	MCU	TQFN-100	1	IC9
3	CY7C64345-32LQXC	QFN-32	1	IC8
4	AD5628BRUZ-2	16TSSOP	2	IC12, IC13
5	NLAS7222BMUTBG	10-UFQFN	1	IC7
6	MAX4712EUE+	16TSSOP	5	IC14-IC18
7	BAS21SLT1G	SOT-23-3	19	D7-D25
8	GM1JS35200AE	0603 (1608 Metric)	1	LED1
9	LB Q39E-N1P1-35-1	0603 (1608 Metric)	1	LED2
10	LW Q38G-Q1S1-3K6L-1	0603 (1608 Metric)	1	LED3
11	LTST-C193KGKT-5A	0603 (1608 Metric)	17	LED4-LED20
12	NX5032-GA -25.0MHz-LN-CD-1	2-SMD	1	X1
13	SC4503TSKTRT	TSOT23-5	1	IC3
14	USB-M26FTR		1	CONN1
15	2N7002	SOT-23-3	2	Q1, Q2
16	MBRX120-TP	SOD-123	4	D3-D6
17	SLG59M610V	TDFN-8	1	IC4
18	AD8591	SOT-23-6	1	IC11
19	ECMF02 -2AMX6	6-UFQFN	1	IC19
20	NRS4018T100MDGJ	4.00x4.00x1.8mm	1	L1
21	BLM18KG260TN1	0603 (1608 Metric)	2	L2, L4
22	RESISTOR 10k OHM 1/10W 1%	0603 (1608 Metric)	1	R27
23	RESISTOR 44.2k OHM 1/10W 1%	0603 (1608 Metric)	1	R28
24	ACM4520-421-2P-T000	4.70x4.50mm	1	L3
25	GRM31CF50J107ZE01L	1206 (3216 Metric)	5	C8-C12
26	LM317LCPK	SOT89-3	2	IC2, IC5
27	LM6211MF/NOPB	SOT23-5	2	IC6, IC10
28	GRM155F51C104ZA01D	0402 (1005 Metric)	28	C6, C13, C16, C19, C20, C22, C23, C27, C28, C30, C31, C33, C35, C36, C37, C38, C40, C41, C42, C44, C46, C47, C48, C49, C50, C51, C54, Csoc
29	EMK316BJ106KL-T	1206 (3216 Metric)	7	C2, C3, C4, C7, C14, C26, C32

© 2022 Renesas Electronics Corporation

Downloaded from Arrow.com.

#	Items	Package	Quantity per Development Board	Symbol
30	C2012X7R1C105K/1.25	0805 (2012 Metric)	4	C21, C29, C39, C45
31	CC0402KRX7R9BB103	0402 (1005 Metric)	4	C5, C15, C52, C55
32	CC0402JRNPO9BN220	0402 (1005 Metric)	8	C1, C17, C18, C24, C25, C34, C43, C53
33	RESISTOR 442k 1/16W 1%	0402 (1005 Metric)	1	R25
34	RESISTOR 100k 1/16W 1%	0402 (1005 Metric)	14	R1, R6, R7, R8, R10, R12, R13, R15, R16, R20, R21, R26, R31, R32
35	RESISTOR 453k 1/16W 1%	0402 (1005 Metric)	3	R18, R19, R30
36	RESISTOR 576k 1/16W 1%	0402 (1005 Metric)	1	R3
37	RESISTOR 560 1/16W 1%	0402 (1005 Metric)	2	R4, R9
38	RESISTOR 2.05 1/16W 1%	0402 (1005 Metric)	1	R11
39	RESISTOR 1.91k 1/16W 1%	0402 (1005 Metric)	1	R5
40	RESISTOR 2k 1/16W	0402 (1005 Metric)	6	R2, R22, R23, R24, R33, R34
41	RESISTOR 24 Ω	0402 (1005 Metric)	2	R14, R17
42	RESISTOR 2 Ω	0805 (2012 Metric)	1	R29
43	YC164-JR-072KL	1206 (3216 Metric)	4	RN6, RN7, RN8, RN9
44	YC164-JR-07100RL	1206 (3216 Metric)	5	RN1, RN2, RN3, RN4, RN5
45	5000_		1	V_{DD}
46	5001_		1	GND
47	5002_		18	TP2-TP10, TP12-TP20
48	SJ61A6		5	
49	TSW-110-08-L-D-RA	0.100" (2.54mm)	2	SV4, SVsoc
50	SSQ-110-02-T-D-RA	0.100" (2.54mm)	1	SV1
51	961106-6404-AR	0.100" (2.54mm)	2	SV2, SV3
52	3021009-06		1	
53	RESISTOR 0 Ω	1206 (3216 Metric)	1	R35
54	SLG55321	TDFN-8	1	IC1
55	BZV55C5V6-TP	SOD-80C	1	D1

© 2022 Renesas Electronics Corporation

Downloaded from Arrow.com.

Revision History

Revision	Date	Description
2.4	21-Mar-2022	Renesas rebranding
2.3	14-Sep-2021	Added section Generators
2.2	21-Feb-2020	Updated according to Dialog's Writing Guideline

© 2022 Renesas Electronics Corporation

Downloaded from Arrow.com.

Status Definitions

Status	Definition
DRAFT	The content of this document is under review and subject to formal approval, which may result in modifications or additions.
APPROVED or unmarked	The content of this document has been approved for publication.

RoHS Compliance

Renesas Electronics Corporation's suppliers certify that its products are in compliance with the requirements of Directive 2011/65/EU of the European Parliament on the restriction of the use of certain hazardous substances in electrical and electronic equipment. RoHS certificates from our suppliers are available on request.

© 2022 Renesas Electronics Corporation

Downloaded from Arrow.com.

IMPORTANT NOTICE AND DISCLAIMER

RENESAS ELECTRONICS CORPORATION AND ITS SUBSIDIARIES (“RENESAS”) PROVIDES TECHNICAL SPECIFICATIONS AND RELIABILITY DATA (INCLUDING DATASHEETS), DESIGN RESOURCES (INCLUDING REFERENCE DESIGNS), APPLICATION OR OTHER DESIGN ADVICE, WEB TOOLS, SAFETY INFORMATION, AND OTHER RESOURCES “AS IS” AND WITH ALL FAULTS, AND DISCLAIMS ALL WARRANTIES, EXPRESS OR IMPLIED, INCLUDING, WITHOUT LIMITATION, ANY IMPLIED WARRANTIES OF MERCHANTABILITY, FITNESS FOR A PARTICULAR PURPOSE, OR NON-INFRINGEMENT OF THIRD-PARTY INTELLECTUAL PROPERTY RIGHTS.

These resources are intended for developers who are designing with Renesas products. You are solely responsible for (1) selecting the appropriate products for your application, (2) designing, validating, and testing your application, and (3) ensuring your application meets applicable standards, and any other safety, security, or other requirements. These resources are subject to change without notice. Renesas grants you permission to use these resources only to develop an application that uses Renesas products. Other reproduction or use of these resources is strictly prohibited. No license is granted to any other Renesas intellectual property or to any third-party intellectual property. Renesas disclaims responsibility for, and you will fully indemnify Renesas and its representatives against, any claims, damages, costs, losses, or liabilities arising from your use of these resources. Renesas' products are provided only subject to Renesas' Terms and Conditions of Sale or other applicable terms agreed to in writing. No use of any Renesas resources expands or otherwise alters any applicable warranties or warranty disclaimers for these products.

(Disclaimer Rev.1.01)

Corporate Headquarters

TOYOSU FORESIA, 3-2-24 Toyosu,
Koto-ku, Tokyo 135-0061, Japan
www.renesas.com

Trademarks

Renesas and the Renesas logo are trademarks of Renesas Electronics Corporation. All trademarks and registered trademarks are the property of their respective owners.

Contact Information

For further information on a product, technology, the most up-to-date version of a document, or your nearest sales office, please visit www.renesas.com/contact-us/.

© 2026 Renesas Electronics Corporation. All rights reserved.

Downloaded from Arrow.com.