DESCRIPTION: 979 SERIES D-SUB BACKSHELL - DIE CAST

ALL TOLERANCES = ±0.3
UNLESS OTHERWISE INDICATED

DESIGNED TO ACCOMMODATE STANDARD:
D-SUB - Shell Size 3

BACKSHELL KIT INCLUDES:

2 - BACKSHELL HALVES
2 - MATING SCREWS (#4-40, RECOMMENDED TORQUE 60 in-oz)
2 - SADDLE WASHERS
2 - HOUSING SCREWS (#4-40, RECOMMENDED TORQUE 5.2 in-lbs)
2 - HOUSING NUTS (#4-40, RECOMMENDED TORQUE 5.2 in-lbs)
1 - GROMMET TREE - VARIOUS SIZES (NON-CONDUCTIVE GROMMETS)

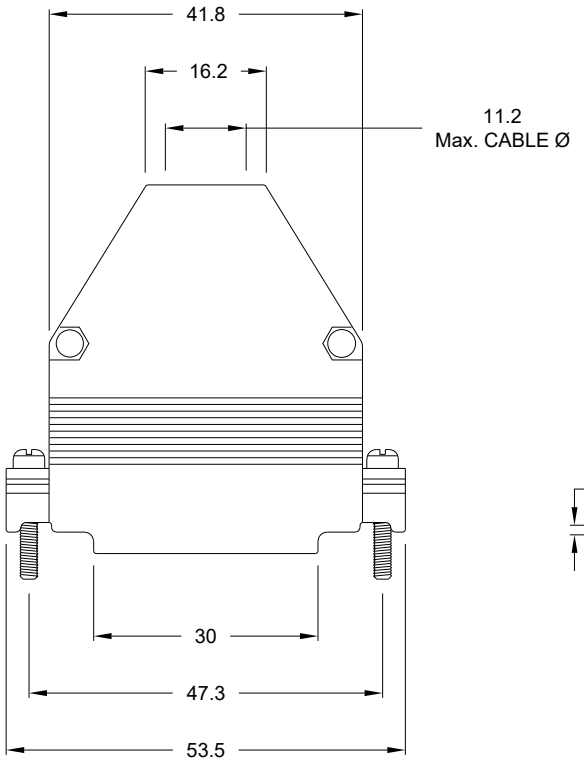

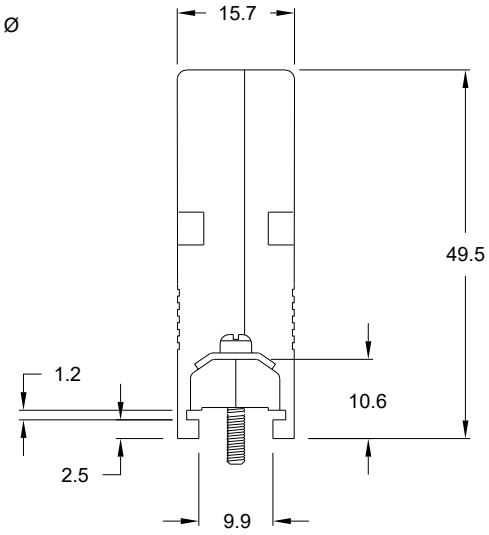

MATERIAL: DIE-CAST ZINC ALLOY
PLATING: NICKEL (5u" MIN PLATING THICKNESS)
OPERATING TEMPERATURE: -45°C TO +120°C

979-025-030R121

SERIES
POSITIONS
025
MATERIAL
030 = ZINC
RoHS COMPLIANT
R = HIGH TEMP. PROCESS
PLATING
12 = NICKEL
PUT-UPS
1 = KIT

RoHS COMPLIANT

UNITS = mm

DO NOT SCALE FROM DRAWING

THESE DRAWINGS AND SPECIFICATIONS ARE THE PROPERTY OF NorComp AND SHALL NOT BE REPRODUCED, COPIED OR USED AS THE BASIS FOR THE MANUFACTURE OR SALE OF APPARATUS WITHOUT WRITTEN PERMISSION.

DRAWN: C. SMITH
DATE: 4/20/2010

NorComp

SCALE: NTS
SHEET 1 OF 2
REV 7
DWG NO. 979-025-030R121

Downloaded from Arrow.com.

DESCRIPTION: 979 SERIES D-SUB BACKSHELL - HARDWARE

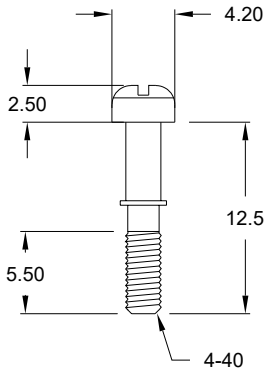

MATING SCREW

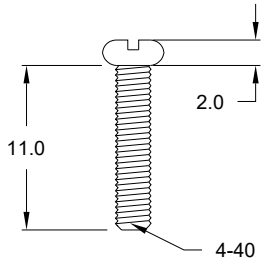

HOUSING SCREW

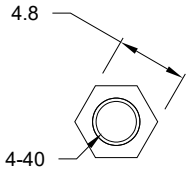

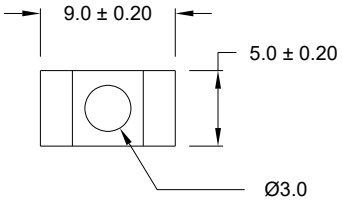

SADDLE WASHER

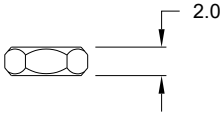

HOUSING NUT

ALL HARDWARE:

MATERIAL = STEEL

PLATING = NICKEL

MAX. CABLE DIAMETER

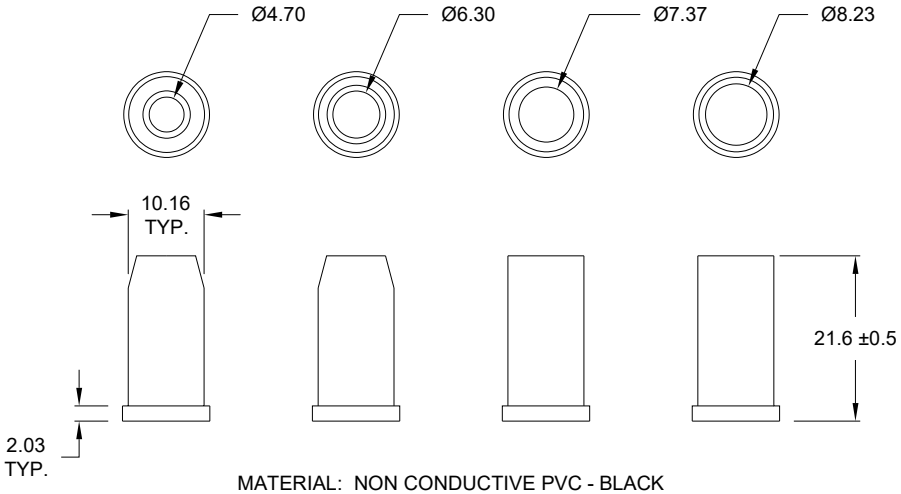

MATERIAL: NON CONDUCTIVE PVC - BLACK

P/N: 162-000-925R000

RoHS COMPLIANT

UNITS = mm

DO NOT SCALE FROM DRAWING

THESE DRAWINGS AND SPECIFICATIONS ARE THE PROPERTY OF NorComp AND SHALL NOT BE REPRODUCED, COPIED OR USED AS THE BASIS FOR THE MANUFACTURE OR SALE OF APPARATUS WITHOUT WRITTEN PERMISSION.

DRAWN: C. SMITH

DATE: 4/20/2010

NorComp

SCALE: NTS

SHEET 2 OF 2

REV 7

DWG NO. 979-025-030R121

Downloaded from Arrow.com.