Freescale Semiconductor
Technical Data

Document Number: MPC885EC
Rev. 7, 07/2010

MPC885/MPC880 PowerQUICC Hardware Specifications

This hardware specification contains detailed information on power considerations, DC/AC electrical characteristics, and AC timing specifications for the MPC885/MPC880. The MPC885 is the superset device of the MPC885/MPC880 family. The CPU on the MPC885/MPC880 is a 32-bit core built on Power Architecture™ technology that incorporates memory management units (MMUs) and instruction and data caches. For functional characteristics of the MPC885/MPC880, refer to the *MPC885 PowerQUICC Family Reference Manual.*

To locate published errata or updates for this document, refer to the MPC875/MPC870 product summary page on our website listed on the back cover of this document or, contact your local Freescale sales office.

Contents

1. Overview 2
2. Features 2
3. Maximum Tolerated Ratings 9
4. Thermal Characteristics 10
5. Power Dissipation 11
6. DC Characteristics 11
7. Thermal Calculation and Measurement 12
8. Power Supply and Power Sequencing 15
9. Layout Practices 16
10. Bus Signal Timing 16
11. IEEE 1149.1 Electrical Specifications 44
12. CPM Electrical Characteristics 46
13. UTOPIA AC Electrical Specifications 69
14. USB Electrical Characteristics 71
15. FEC Electrical Characteristics 71
16. Mechanical Data and Ordering Information 75
17. Document Revision History 85

© 2010 Freescale Semiconductor, Inc. All rights reserved.

Downloaded from Arrow.com.

1 Overview

The MPC885/MPC880 is a versatile single-chip integrated microprocessor and peripheral combination that can be used in a variety of controller applications and communications and networking systems. The MPC885/MPC880 provides enhanced ATM functionality, an additional fast Ethernet controller, a USB, and an encryption block.

Table 1 shows the functionality supported by MPC885/MPC880.

Table 1. MPC885 Family

Part	Cache (Kbytes)		Ethernet		SCC	SMC	USB	ATM Support	Security Engine
	I Cache	D Cache	10BaseT	10/100					
MPC885	8	8	Up to 3	2	3	2	1	Serial ATM and UTOPIA interface	Yes
MPC880	8	8	Up to 2	2	2	2	1	Serial ATM and UTOPIA interface	No

2 Features

The MPC885/MPC880 is comprised of three modules that each use the 32-bit internal bus: a MPC8xx core, a system integration unit (SIU), and a communications processor module (CPM).

The following list summarizes the key MPC885/MPC880 features:

- Embedded MPC8xx core up to 133 MHz
- Maximum frequency operation of the external bus is 80 MHz (in 1:1 mode)
  - The 133-MHz core frequency supports 2:1 mode only.
  - The 66-/80-MHz core frequencies support both the 1:1 and 2:1 modes.
- Single-issue, 32-bit core (compatible with the Power Architecture definition) with thirty-two 32-bit general-purpose registers (GPRs)
  - The core performs branch prediction with conditional prefetch and without conditional execution.
  - 8-Kbyte data cache and 8-Kbyte instruction cache (see Table 1)
    - Instruction cache is two-way, set-associative with 256 sets in 2 blocks
    - Data cache is two-way, set-associative with 256 sets
    - Cache coherency for both instruction and data caches is maintained on 128-bit (4-word) cache blocks.
    - Caches are physically addressed, implement a least recently used (LRU) replacement algorithm, and are lockable on a cache block basis.
  - MMUs with 32-entry TLB, fully associative instruction and data TLBs
  - MMUs support multiple page sizes of 4, 16, and 512 Kbytes, and 8 Mbytes; 16 virtual address spaces and 16 protection groups
  - Advanced on-chip emulation debug mode

Downloaded from Arrow.com.

- Provides enhanced ATM functionality found on the MPC862 and MPC866 families and includes the following:
  - Improved operation, administration and maintenance (OAM) support
  - OAM performance monitoring (PM) support
  - Multiple APC priority levels available to support a range of traffic pace requirements
  - Port-to-port switching capability without the need for RAM-based microcode
  - Simultaneous MII (100BaseT) and UTOPIA (half- or full -duplex) capability
  - Optional statistical cell counters per PHY
  - UTOPIA L2-compliant interface with added FIFO buffering to reduce the total cell transmission time and multi-PHY support. (The earlier UTOPIA L1 specification is also supported.)
  - Parameter RAM for both SPI and I^2C can be relocated without RAM-based microcode
  - Supports full-duplex UTOPIA master (ATM side) and slave (PHY side) operations using a split bus
  - AAL2/VBR functionality is ROM-resident
- Up to 32-bit data bus (dynamic bus sizing for 8, 16, and 32 bits)
- Thirty-two address lines
- Memory controller (eight banks)
  - Contains complete dynamic RAM (DRAM) controller
  - Each bank can be a chip select or $\overline{\text{RAS}}$ to support a DRAM bank
  - Up to 30 wait states programmable per memory bank
  - Glueless interface to DRAM, SIMMS, SRAM, EPROMs, Flash EPROMs, and other memory devices
  - DRAM controller programmable to support most size and speed memory interfaces
  - Four $\overline{\text{CAS}}$ lines, four $\overline{\text{WE}}$ lines, and one $\overline{\text{OE}}$ line
  - Boot chip-select available at reset (options for 8-, 16-, or 32-bit memory)
  - Variable block sizes (32 Kbytes–256 Mbytes)
  - Selectable write protection
  - On-chip bus arbitration logic
- General-purpose timers
  - Four 16-bit timers or two 32-bit timers
  - Gate mode can enable/disable counting.
  - Interrupt can be masked on reference match and event capture
- Two fast Ethernet controllers (FEC)—Two 10/100 Mbps Ethernet/IEEE Std. 802.3™ CDMA/CS that interface through MII and/or RMII interfaces
- System integration unit (SIU)
  - Bus monitor
  - Software watchdog

Downloaded from Arrow.com.

- — Periodic interrupt timer (PIT)
- — Clock synthesizer
- — Decrementer and time base
- — Reset controller
- — IEEE Std 1149.1™ test access port (JTAG)

- Security engine is optimized to handle all the algorithms associated with IPsec, SSL/TLS, SRTP, IEEE Std 802.11i™, and iSCSI processing. Available on the MPC885, the security engine contains a crypto-channel, a controller, and a set of crypto hardware accelerators (CHAs). The CHAs are:
  - — Data encryption standard execution unit (DEU)
    - – DES, 3DES
    - – Two key (K1, K2, K1) or three key (K1, K2, K3)
    - – ECB and CBC modes for both DES and 3DES
  - — Advanced encryption standard unit (AESU)
    - – Implements the Rijndael symmetric key cipher
    - – ECB, CBC, and counter modes
    - – 128-, 192-, and 256- bit key lengths
  - — Message digest execution unit (MDEU)
    - – SHA with 160- or 256-bit message digest
    - – MD5 with 128-bit message digest
    - – HMAC with either algorithm
  - — Crypto-channel supporting multi-command descriptor chains
  - — Integrated controller managing internal resources and bus mastering
  - — Buffer size of 256 bytes for the DEU, AESU, and MDEU, with flow control for large data sizes
- Interrupts
  - — Six external interrupt request (IRQ) lines
  - — 12 port pins with interrupt capability
  - — 23 internal interrupt sources
  - — Programmable priority between SCCs
  - — Programmable highest priority request
- Communications processor module (CPM)
  - — RISC controller
  - — Communication-specific commands (for example, GRACEFUL STOP TRANSMIT, ENTER HUNT MODE, and RESTART TRANSMIT)
  - — Supports continuous mode transmission and reception on all serial channels
  - — 8-Kbytes of dual-port RAM
  - — Several serial DMA (SDMA) channels to support the CPM
  - — Three parallel I/O registers with open-drain capability

Downloaded from Arrow.com.

- On-chip 16 × 16 multiply accumulate controller (MAC)
  - One operation per clock (two-clock latency, one-clock blockage)
  - MAC operates concurrently with other instructions
  - FIR loop—Four clocks per four multiplies
- Four baud rate generators
  - Independent (can be connected to any SCC or SMC)
  - Allow changes during operation
  - Autobaud support option
- Up to three serial communication controllers (SCCs) supporting the following protocols:
  - Serial ATM capability on SCCs
  - Optional UTOPIA port on SCC4
  - Ethernet/IEEE Std 802.3™ optional on the SCC(s) supporting full 10-Mbps operation
  - HDLC/SDLC
  - HDLC bus (implements an HDLC-based local area network (LAN))
  - Asynchronous HDLC to support point-to-point protocol (PPP)
  - AppleTalk
  - Universal asynchronous receiver transmitter (UART)
  - Synchronous UART
  - Serial infrared (IrDA)
  - Binary synchronous communication (BISYNC)
  - Totally transparent (bit streams)
  - Totally transparent (frame based with optional cyclic redundancy check (CRC))
- Up to two serial management channels (SMCs) supporting the following protocols:
  - UART (low-speed operation)
  - Transparent
  - General circuit interface (GCI) controller
  - Provide management for BRI devices as GCI controller in time-division multiplexed (TDM) channels
- Universal serial bus (USB)—Supports operation as a USB function endpoint, a USB host controller, or both for testing purposes (loop-back diagnostics)
  - USB 2.0 full-/low-speed compatible
  - The USB function mode has the following features:
    - Four independent endpoints support control, bulk, interrupt, and isochronous data transfers.
    - CRC16 generation and checking
    - CRC5 checking
    - NRZI encoding/decoding with bit stuffing
    - 12- or 1.5-Mbps data rate

Downloaded from Arrow.com.

  - Flexible data buffers with multiple buffers per frame
  - Automatic retransmission upon transmit error
- The USB host controller has the following features:
  - Supports control, bulk, interrupt, and isochronous data transfers
  - CRC16 generation and checking
  - NRZI encoding/decoding with bit stuffing
  - Supports both 12- and 1.5-Mbps data rates (automatic generation of preamble token and data rate configuration). Note that low-speed operation requires an external hub.
  - Flexible data buffers with multiple buffers per frame
  - Supports local loop back mode for diagnostics (12 Mbps only)

- Serial peripheral interface (SPI)
  - Supports master and slave modes
  - Supports multiple-master operation on the same bus
- Inter-integrated circuit (I^2C) port
  - Supports master and slave modes
  - Supports a multiple-master environment
- Time-slot assigner (TSA)
  - Allows SCCs and SMCs to run in multiplexed and/or non-multiplexed operation
  - Supports T1, CEPT, PCM highway, ISDN basic rate, ISDN primary rate, user defined
  - 1- or 8-bit resolution
  - Allows independent transmit and receive routing, frame synchronization, and clocking
  - Allows dynamic changes
  - Can be internally connected to four serial channels (two SCCs and two SMCs)
- Parallel interface port (PIP)
  - Centronics interface support
  - Supports fast connection between compatible ports on MPC885/MPC880 and other MPC8xx devices
- PCMCIA interface
  - Master (socket) interface, release 2.1-compliant
  - Supports two independent PCMCIA sockets
  - 8 memory or I/O windows supported
- Debug interface
  - Eight comparators: four operate on instruction address, two operate on data address, and two operate on data
  - Supports conditions: $=$ $\neq$ $<$ $>$
  - Each watchpoint can generate a break point internally.
- Normal high and normal low power modes to conserve power

Downloaded from Arrow.com.

- 1.8-V core and 3.3-V I/O operation
- The MPC885/MPC880 comes in a 357-pin ball grid array (PBGA) package

The MPC885 block diagram is shown in Figure 1.

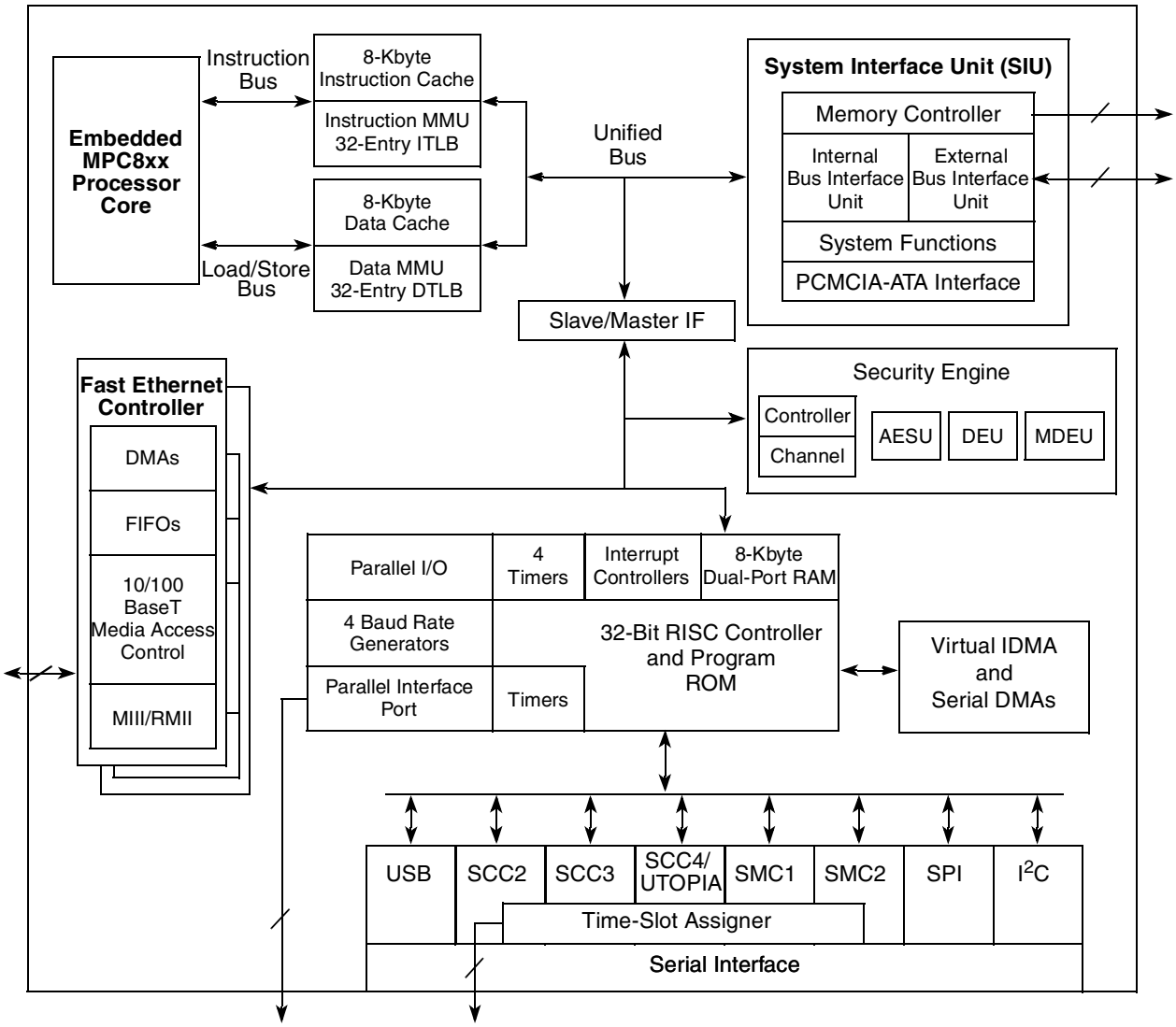

Figure 1. MPC885 Block Diagram

Downloaded from Arrow.com.

The MPC880 block diagram is shown in Figure 2.

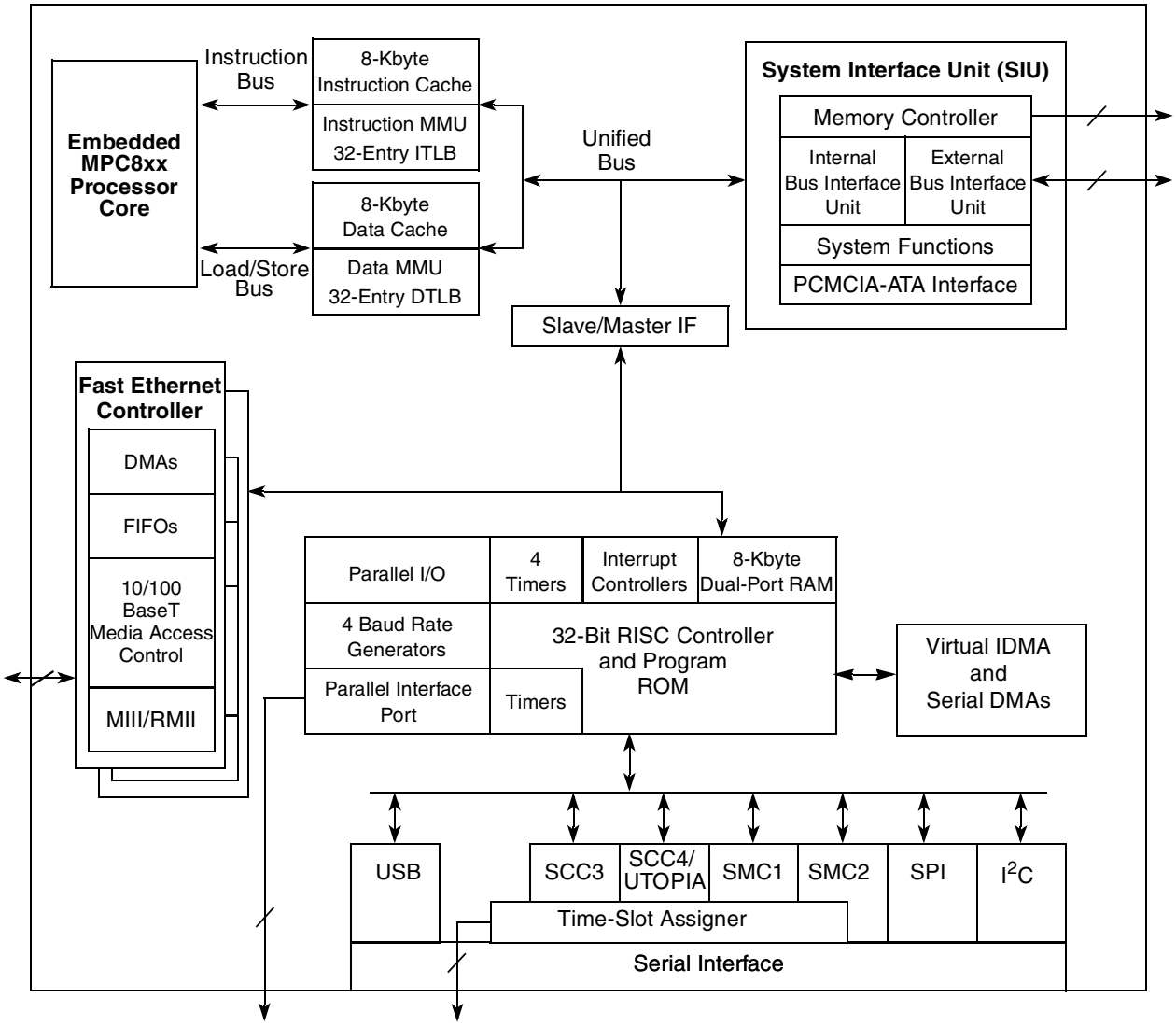

Figure 2. MPC880 Block Diagram

Downloaded from Arrow.com.

3 Maximum Tolerated Ratings

This section provides the maximum tolerated voltage and temperature ranges for the MPC885/MPC880. Table 2 displays the maximum tolerated ratings, and Table 3 displays the operating temperatures.

Table 2. Maximum Tolerated Ratings

Rating	Symbol	Value	Unit
Supply voltage[1]	V_{DDH}	–0.3 to 4.0	V
	V_{DDL}	–0.3 to 2.0	V
	VDDSYN	–0.3 to 2.0	V
	Difference between V_{DDL} and V_{DDSYN}	<100	mV
Input voltage[2]	V_{in}	GND – 0.3 to V_{DDH}	V
Storage temperature range	T_{stg}	–55 to +150	°C

1 The power supply of the device must start its ramp from 0.0 V.

2 Functional operating conditions are provided with the DC electrical specifications in Table 6. Absolute maximum ratings are stress ratings only; functional operation at the maxima is not guaranteed. Stress beyond those listed may affect device reliability or cause permanent damage to the device. See Section 8, "Power Supply and Power Sequencing."
Caution: All inputs that tolerate 5 V cannot be more than 2.5 V greater than V_{DDH}. This restriction applies to power up and normal operation (that is, if the MPC885/MPC880 is unpowered, a voltage greater than 2.5 V must not be applied to its inputs).

Figure 3 shows the undershoot and overshoot voltages at the interfaces of the MPC885/MPC880.

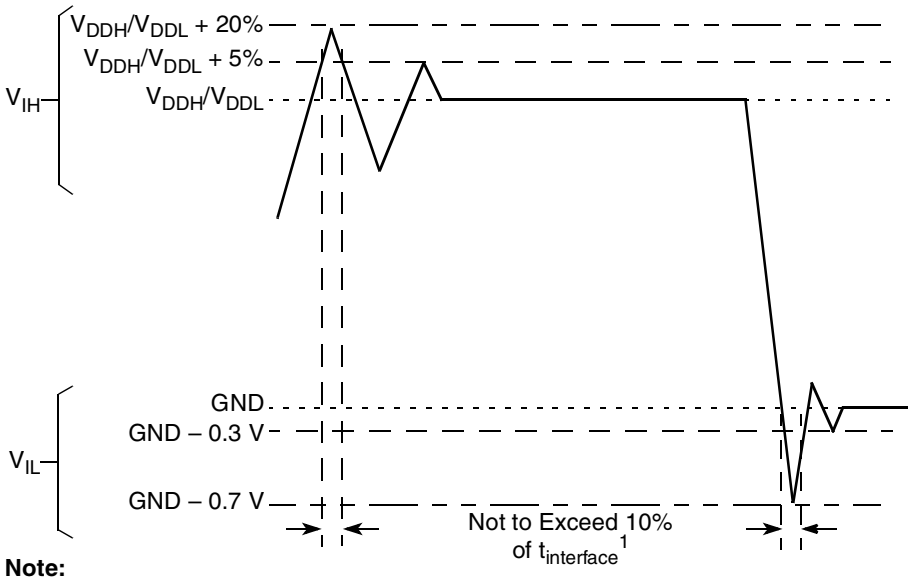

Note:
1. $t_{interface}$ refers to the clock period associated with the bus clock interface.

Figure 3. Undershoot/Overshoot Voltage for V_{DDH} and V_{DDL}

Downloaded from Arrow.com.

Table 3. Operating Temperatures

Rating	Symbol	Value	Unit
Temperature[1] (standard)	$T_{A(min)}$	0	°C
	$T_{J(max)}$	95	°C
Temperature (extended)	$T_{A(min)}$	–40	°C
	$T_{J(max)}$	100	°C

[1] Minimum temperatures are guaranteed as ambient temperature, T_A. Maximum temperatures are guaranteed as junction temperature, T_J.

This device contains circuitry protecting against damage due to high-static voltage or electrical fields; however, it is advised that normal precautions be taken to avoid application of any voltages higher than maximum-rated voltages to this high-impedance circuit. Reliability of operation is enhanced if unused inputs are tied to an appropriate logic voltage level (for example, either GND or V_{DD}).

4 Thermal Characteristics

Table 4 shows the thermal characteristics for the MPC885/MPC880.

Table 4. MPC885/MPC880 Thermal Resistance Data

Rating	Environment		Symbol	Value	Unit
Junction-to-ambient[1]	Natural convection	Single-layer board (1s)	$R_{\theta JA}$[2]	37	°C/W
		Four-layer board (2s2p)	$R_{\theta JMA}$[3]	25	
	Airflow (200 ft/min)	Single-layer board (1s)	$R_{\theta JMA}$[3]	30	
		Four-layer board (2s2p)	$R_{\theta JMA}$[3]	22	
Junction-to-board[4]	—	—	$R_{\theta JB}$	17	
Junction-to-case [5]	—	—	$R_{\theta JC}$	10	
Junction-to-package top[6]	Natural convection	—	Ψ_{JT}	2	
	Airflow (200 ft/min)	—	Ψ_{JT}	2	

[1] Junction temperature is a function of on-chip power dissipation, package thermal resistance, mounting site (board) temperature, ambient temperature, airflow, power dissipation of other components on the board, and board thermal resistance.
[2] Per SEMI G38-87 and JEDEC JESD51-2 with the single-layer board horizontal.
[3] Per JEDEC JESD51-6 with the board horizontal.
[4] Thermal resistance between the die and the printed-circuit board per JEDEC JESD51-8. Board temperature is measured on the top surface of the board near the package.
[5] Indicates the average thermal resistance between the die and the case top surface as measured by the cold plate method (MIL SPEC-883 Method 1012.1) with the cold plate temperature used for the case temperature. For exposed pad packages where the pad would be expected to be soldered, junction-to-case thermal resistance is a simulated value from the junction to the exposed pad without contact resistance.
[6] Thermal characterization parameter indicating the temperature difference between package top and the junction temperature per JEDEC JESD51-2.

Downloaded from Arrow.com.

5 Power Dissipation

Table 5 provides information on power dissipation. The modes are 1:1, where CPU and bus speeds are equal, and 2:1, where CPU frequency is twice bus speed.

Table 5. Power Dissipation (P_D)

Die Revision	Bus Mode	CPU Frequency	Typical[1]	Maximum[2]	Unit
0	1:1	66 MHz	310	390	mW
		80 MHz	350	430	mW
	2:1	133 MHz	430	495	mW

[1] Typical power dissipation at $V_{DDL} = V_{DDSYN} = 1.8$ V, and V_{DDH} is at 3.3 V.
[2] Maximum power dissipation at $V_{DDL} = V_{DDSYN} = 1.9$ V, and V_{DDH} is at 3.5 V.

NOTE

The values in Table 5 represent V_{DDL}-based power dissipation and do not include I/O power dissipation over V_{DDH}. I/O power dissipation varies widely by application due to buffer current, depending on external circuitry.

The V_{DDSYN} power dissipation is negligible.

6 DC Characteristics

Table 6 provides the DC electrical characteristics for the MPC885/MPC880.

Table 6. DC Electrical Specifications

Characteristic	Symbol	Min	Max	Unit
Operating voltage	V_{DDL} (core)	1.7	1.9	V
	V_{DDH} (I/O)	3.135	3.465	V
	V_{DDSYN}[1]	1.7	1.9	V
	Difference between V_{DDL} and V_{DDSYN}	—	100	mV
Input high voltage (all inputs except EXTAL and EXTCLK)[2]	V_{IH}	2.0	3.465	V
Input low voltage[3]	V_{IL}	GND	0.8	V
EXTAL, EXTCLK input high voltage	V_{IHC}	0.7*(V_{DDH})	V_{DDH}	V
Input leakage current, Vin = 5.5 V (except TMS, $\overline{TRST}$, DSCK and DSDI pins) for 5-V tolerant pins [2]	I_{in}	—	100	μA
Input leakage current, $V_{in} = V_{DDH}$ (except TMS, $\overline{TRST}$, DSCK, and DSDI)	I_{In}	—	10	μA
Input leakage current, $V_{in} = 0$ V (except TMS, $\overline{TRST}$, DSCK and DSDI pins)	I_{In}	—	10	μA
Input capacitance[4]	C_{in}	—	20	pF

Downloaded from Arrow.com.

Table 6. DC Electrical Specifications (continued)

Characteristic	Symbol	Min	Max	Unit
Output high voltage, I_{OH} = –2.0 mA, except XTAL and open-drain pins	V_{OH}	2.4	—	V
Output low voltage I_{OL} = 2.0 mA (CLKOUT) I_{OL} = 3.2 mA[5] I_{OL} = 5.3 mA[6] I_{OL} = 7.0 mA (TXD1/PA14, TXD2/PA12) I_{OL} = 8.9 mA ($\overline{TS}$, $\overline{TA}$, $\overline{TEA}$, $\overline{BI}$, $\overline{BB}$, $\overline{HRESET}$, $\overline{SRESET}$)	V_{OL}	—	0.5	V

1 The difference between V_{DDL} and V_{DDSYN} cannot be more than 100 mV.
2 The signals PA[0:15], PB[14:31], PC[4:15], PD[3:15], PE(14:31), TDI, TDO, TCK, $\overline{TRST}$, TMS, MII1_TXEN, MII_MDIO are 5-V tolerant. The minimum voltage is still 2.0 V.
3 V_{IL}(max) for the I^2C interface is 0.8 V rather than the 1.5 V as specified in the I^2C standard.
4 Input capacitance is periodically sampled.
5 A(0:31), TSIZ0/$\overline{REG}$, TSIZ1, D(0:31), $\overline{IRQ}$(2:4), $\overline{IRQ6}$, RD/$\overline{WR}$, $\overline{BURST}$, IP_B(3:7), PA(0:11), PA13, PA15, PB(14:31), PC(4:15), PD(3:15), PE(14:31), MII1_CRS, MII_MDIO, MII1_TXEN, and MII1_COL.
6 $\overline{BDIP}$/$\overline{GPL_B}$(5), $\overline{BR}$, $\overline{BG}$, FRZ/$\overline{IRQ6}$, $\overline{CS}$(0:7), $\overline{WE}$(0:3), $\overline{BS_A}$(0:3), $\overline{GPL_A0}$/$\overline{GPL_B0}$, $\overline{OE}$/$\overline{GPL_A1}$/$\overline{GPL_B1}$, $\overline{GPL_A}$(2:3)/$\overline{GPL_B}$(2:3)/$\overline{CS}$(2:3), UPWAITA/$\overline{GPL_A4}$, UPWAITB/$\overline{GPL_B4}$, $\overline{GPL_A5}$, ALE_A, $\overline{CE}$1_A, $\overline{CE}$2_A, OP(0:3), and BADDR(28:30).

7 Thermal Calculation and Measurement

For the following discussions, $P_D = (V_{DDL} \times I_{DDL}) + PI/O$, where PI/O is the power dissipation of the I/O drivers.

NOTE

The V_{DDSYN} power dissipation is negligible.

7.1 Estimation with Junction-to-Ambient Thermal Resistance

An estimation of the chip junction temperature, T_J, in °C can be obtained from the following equation:

$$T_J = T_A + (R_{\theta JA} \times P_D)$$

where:

T_A = ambient temperature (ºC)
$R_{\theta JA}$ = package junction-to-ambient thermal resistance (ºC/W)
P_D = power dissipation in package

The junction-to-ambient thermal resistance is an industry standard value that provides a quick and easy estimation of thermal performance. However, the answer is only an estimate; test cases have demonstrated that errors of a factor of two (in the quantity $T_J - T_A$) are possible.

Downloaded from Arrow.com.

7.2 Estimation with Junction-to-Case Thermal Resistance

Historically, thermal resistance has frequently been expressed as the sum of a junction-to-case thermal resistance and a case-to-ambient thermal resistance:

$$R_{\theta JA} = R_{\theta JC} + R_{\theta CA}$$

where:

$R_{\theta JA}$ = junction-to-ambient thermal resistance (ºC/W)

$R_{\theta JC}$ = junction-to-case thermal resistance (ºC/W)

$R_{\theta CA}$ = case-to-ambient thermal resistance (ºC/W)

$R_{\theta JC}$ is device-related and cannot be influenced by the user. The user adjusts the thermal environment to affect the case-to-ambient thermal resistance, $R_{\theta CA}$. For instance, the user can change the airflow around the device, add a heat sink, change the mounting arrangement on the printed-circuit board, or change the thermal dissipation on the printed-circuit board surrounding the device. This thermal model is most useful for ceramic packages with heat sinks where some 90% of the heat flows through the case and the heat sink to the ambient environment. For most packages, a better model is required.

7.3 Estimation with Junction-to-Board Thermal Resistance

A simple package thermal model that has demonstrated reasonable accuracy (about 20%) is a two-resistor model consisting of a junction-to-board and a junction-to-case thermal resistance. The junction-to-case covers the situation where a heat sink is used or where a substantial amount of heat is dissipated from the top of the package. The junction-to-board thermal resistance describes the thermal performance when most of the heat is conducted to the printed-circuit board. It has been observed that the thermal performance of most plastic packages and especially PBGA packages is strongly dependent on the board temperature; see Figure 4.

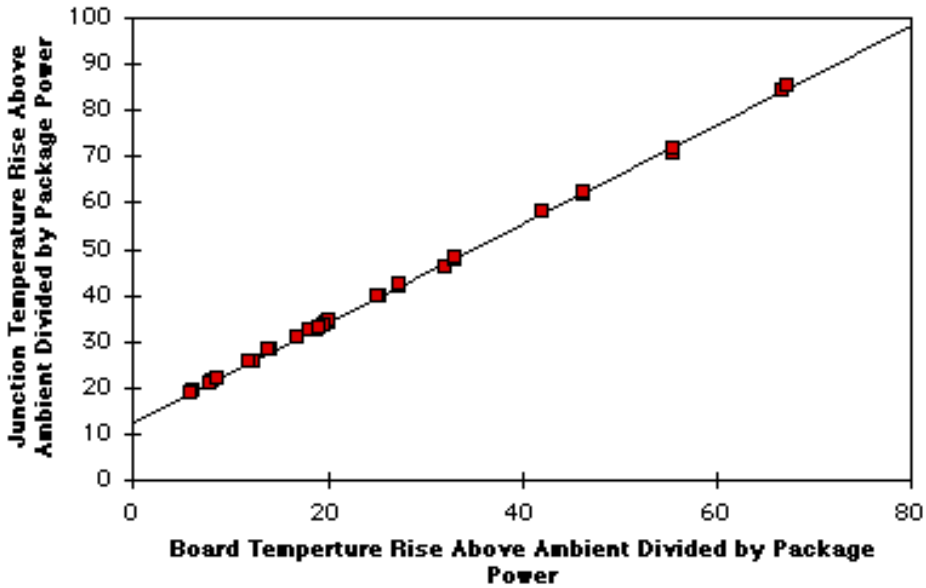

Figure 4. Effect of Board Temperature Rise on Thermal Behavior

Downloaded from Arrow.com.

If the board temperature is known, an estimate of the junction temperature in the environment can be made using the following equation:

$$T_J = T_B + (R_{\theta JB} \times P_D)$$

where:

$R_{\theta JB}$ = junction-to-board thermal resistance (ºC/W)

T_B = board temperature (ºC)

P_D = power dissipation in package

If the board temperature is known and the heat loss from the package case to the air can be ignored, acceptable predictions of junction temperature can be made. For this method to work, the board and board mounting must be similar to the test board used to determine the junction-to-board thermal resistance, namely a 2s2p (board with a power and a ground plane) and vias attaching the thermal balls to the ground plane.

7.4 Estimation Using Simulation

When the board temperature is not known, a thermal simulation of the application is needed. The simple two resistor model can be used with the thermal simulation of the application [2], or a more accurate and complex model of the package can be used in the thermal simulation.

7.5 Experimental Determination

To determine the junction temperature of the device in the application after prototypes are available, the thermal characterization parameter (Ψ_{JT}) can be used to determine the junction temperature with a measurement of the temperature at the top center of the package case using the following equation:

$$T_J = T_T + (\Psi_{JT} \times P_D)$$

where:

Ψ_{JT} = thermal characterization parameter

T_T = thermocouple temperature on top of package

P_D = power dissipation in package

The thermal characterization parameter is measured per the JESD51-2 specification published by JEDEC using a 40 gauge type T thermocouple epoxied to the top center of the package case. The thermocouple should be positioned so that the thermocouple junction rests on the package. A small amount of epoxy is placed over the thermocouple junction and over about 1 mm of wire extending from the junction. The thermocouple wire is placed flat against the package case to avoid measurement errors caused by the cooling effects of the thermocouple wire.

Downloaded from Arrow.com.

7.6 References

Semiconductor Equipment and Materials International(415) 964-5111
805 East Middlefield Rd
Mountain View, CA 94043

MIL-SPEC and EIA/JESD (JEDEC) specifications800-854-7179 or
(Available from Global Engineering Documents)303-397-7956

JEDEC Specifications http://www.jedec.org

1. C.E. Triplett and B. Joiner, “An Experimental Characterization of a 272 PBGA Within an Automotive Engine Controller Module,” Proceedings of SemiTherm, San Diego, 1998, pp. 47–54.
2. 2. B. Joiner and V. Adams, “Measurement and Simulation of Junction to Board Thermal Resistance and Its Application in Thermal Modeling,” Proceedings of SemiTherm, San Diego, 1999, pp. 212–220.

8 Power Supply and Power Sequencing

This section provides design considerations for the MPC885/MPC880 power supply. The MPC885/MPC880 has a core voltage (V_{DDL}) and PLL voltage (V_{DDSYN}), which both operate at a lower voltage than the I/O voltage V_{DDH}. The I/O section of the MPC885/MPC880 is supplied with 3.3 V across V_{DDH} and V_{SS} (GND).

The signals PA[0:15], PB[14:31], PC[4:15], PD[3:15], TDI, TDO, TCK, TRST_B, TMS, MII_TXEN, and MII_MDIO are 5 V tolerant. All inputs cannot be more than 2.5 V greater than V_{DDH}. In addition, 5-V tolerant pins cannot exceed 5.5 V and remaining input pins cannot exceed 3.465 V. This restriction applies to power up/down and normal operation.

One consequence of multiple power supplies is that when power is initially applied the voltage rails ramp up at different rates. The rates depend on the nature of the power supply, the type of load on each power supply, and the manner in which different voltages are derived. The following restrictions apply:

- V_{DDL} must not exceed V_{DDH} during power up and power down.
- V_{DDL} must not exceed 1.9 V, and V_{DDH} must not exceed 3.465 V.

These cautions are necessary for the long-term reliability of the part. If they are violated, the electrostatic discharge (ESD) protection diodes are forward-biased, and excessive current can flow through these diodes. If the system power supply design does not control the voltage sequencing, the circuit shown Figure 5 can be added to meet these requirements. The MUR420 Schottky diodes control the maximum potential difference between the external bus and core power supplies on power up, and the 1N5820 diodes regulate the maximum potential difference on power down.

Downloaded from Arrow.com.

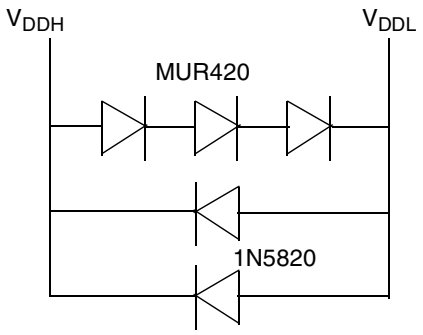

Figure 5. Example Voltage Sequencing Circuit

9 Layout Practices

Each V_{DD} pin on the MPC885/MPC880 should be provided with a low-impedance path to the board's supply. Each GND pin should likewise be provided with a low-impedance path to ground. The power supply pins drive distinct groups of logic on chip. The V_{DD} power supply should be bypassed to ground using at least four 0.1 µF by-pass capacitors located as close as possible to the four sides of the package. Each board designed should be characterized and additional appropriate decoupling capacitors should be used if required. The capacitor leads and associated printed-circuit traces connecting to chip V_{DD} and GND should be kept to less than half an inch per capacitor lead. At a minimum, a four-layer board employing two inner layers as V_{DD} and GND planes should be used.

All output pins on the MPC885/MPC880 have fast rise and fall times. Printed-circuit (PC) trace interconnection length should be minimized in order to minimize undershoot and reflections caused by these fast output switching times. This recommendation particularly applies to the address and data buses. Maximum PC trace lengths of six inches are recommended. Capacitance calculations should consider all device loads as well as parasitic capacitances due to the PC traces. Attention to proper PCB layout and bypassing becomes especially critical in systems with higher capacitive loads because these loads create higher transient currents in the V_{DD} and GND circuits. Pull up all unused inputs or signals that will be inputs during reset. Special care should be taken to minimize the noise levels on the PLL supply pins. For more information, please refer to the *MPC885 PowerQUICC™ Family Reference Manual*, Section 14.4.3, "Clock Synthesizer Power (V_{DDSYN}, V_{SSSYN}, V_{SSSYN1})."

10 Bus Signal Timing

The maximum bus speed supported by the MPC885/MPC880 is 80 MHz. Higher-speed parts must be operated in half-speed bus mode (for example, an MPC885/MPC880 used at 133 MHz must be configured for a 66 MHz bus). Table 7 shows the frequency ranges for standard part frequencies in 1:1 bus mode, and Table 8 shows the frequency ranges for standard part frequencies in 2:1 bus mode.

Downloaded from Arrow.com.

Table 7. Frequency Ranges for Standard Part Frequencies (1:1 Bus Mode)

Part Frequency	66 MHz		80 MHz	
	Min	Max	Min	Max
Core frequency	40	66.67	40	80
Bus frequency	40	66.67	40	80

Table 8. Frequency Ranges for Standard Part Frequencies (2:1 Bus Mode)

Part Frequency	66 MHz		80 MHz		133 MHz	
	Min	Max	Min	Max	Min	Max
Core frequency	40	66.67	40	80	40	133
Bus frequency	20	33.33	20	40	20	66

Table 9 provides the timings for the MPC885/MPC880 at 33-, 40-, 66-, and 80-MHz bus operation.

The timing for the MPC885/MPC880 bus shown assumes a 50-pF load for maximum delays and a 0-pF load for minimum delays. CLKOUT assumes a 100-pF load for maximum delays and a 50-pF load for minimum delays.

Table 9. Bus Operation Timings

Num	Characteristic	33 MHz		40 MHz		66 MHz		80 MHz		Unit
		Min	Max	Min	Max	Min	Max	Min	Max	
B1	Bus period (CLKOUT), see Table 7	—	—	—	—	—	—	—	—	ns
B1a	EXTCLK to CLKOUT phase skew - If CLKOUT is an integer multiple of EXTCLK, then the rising edge of EXTCLK is aligned with the rising edge of CLKOUT. For a non-integer multiple of EXTCLK, this synchronization is lost, and the rising edges of EXTCLK and CLKOUT have a continuously varying phase skew.	–2	+2	–2	+2	–2	+2	–2	+2	ns
B1b	CLKOUT frequency jitter peak-to-peak	—	1	—	1	—	1	—	1	ns
B1c	Frequency jitter on EXTCLK	—	0.50	—	0.50	—	0.50	—	0.50	%
B1d	CLKOUT phase jitter peak-to-peak for OSCLK ≥ 15 MHz	—	4	—	4	—	4	—	4	ns
	CLKOUT phase jitter peak-to-peak for OSCLK < 15 MHz	—	5	—	5	—	5	—	5	ns
B2	CLKOUT pulse width low (MIN = 0.4 × B1, MAX = 0.6 × B1)	12.1	18.2	10.0	15.0	6.1	9.1	5.0	7.5	ns
B3	CLKOUT pulse width high (MIN = 0.4 × B1, MAX = 0.6 × B1)	12.1	18.2	10.0	15.0	6.1	9.1	5.0	7.5	ns
B4	CLKOUT rise time	—	4.00	—	4.00	—	4.00	—	4.00	ns

Downloaded from Arrow.com.

Table 9. Bus Operation Timings (continued)

Num	Characteristic	33 MHz		40 MHz		66 MHz		80 MHz		Unit
		Min	Max	Min	Max	Min	Max	Min	Max	
B5	CLKOUT fall time	—	4.00	—	4.00	—	4.00	—	4.00	ns
B7	CLKOUT to A(0:31), BADDR(28:30), RD/$\overline{\text{WR}}$, $\overline{\text{BURST}}$, D(0:31) output hold (MIN = 0.25 × B1)	7.60	—	6.30	—	3.80	—	3.13	—	ns
B7a	CLKOUT to TSIZ(0:1), $\overline{\text{REG}}$, $\overline{\text{RSV}}$, $\overline{\text{BDIP}}$, PTR output hold (MIN = 0.25 × B1)	7.60	—	6.30	—	3.80	—	3.13	—	ns
B7b	CLKOUT to $\overline{\text{BR}}$, $\overline{\text{BG}}$, FRZ, VFLS(0:1), VF(0:2) IWP(0:2), LWP(0:1), $\overline{\text{STS}}$ output hold (MIN = 0.25 × B1)	7.60	—	6.30	—	3.80	—	3.13	—	ns
B8	CLKOUT to A(0:31), BADDR(28:30) RD/$\overline{\text{WR}}$, $\overline{\text{BURST}}$, D(0:31) valid (MAX = 0.25 × B1 + 6.3)	—	13.80	—	12.50	—	10.00	—	9.43	ns
B8a	CLKOUT to TSIZ(0:1), $\overline{\text{REG}}$, $\overline{\text{RSV}}$, AT(0:3) $\overline{\text{BDIP}}$, PTR valid (MAX = 0.25 × B1 + 6.3)	—	13.80	—	12.50	—	10.00	—	9.43	ns
B8b	CLKOUT to $\overline{\text{BR}}$, $\overline{\text{BG}}$, VFLS(0:1), VF(0:2), IWP(0:2), FRZ, LWP(0:1), $\overline{\text{STS}}$ valid [4] (MAX = 0.25 × B1 + 6.3)	—	13.80	—	12.50	—	10.00	—	9.43	ns
B9	CLKOUT to A(0:31), BADDR(28:30), RD/$\overline{\text{WR}}$, $\overline{\text{BURST}}$, D(0:31), TSIZ(0:1), $\overline{\text{REG}}$, $\overline{\text{RSV}}$, AT(0:3), PTR High-Z (MAX = 0.25 × B1 + 6.3)	7.60	13.80	6.30	12.50	3.80	10.00	3.13	9.43	ns
B11	CLKOUT to $\overline{\text{TS}}$, $\overline{\text{BB}}$ assertion (MAX = 0.25 × B1 + 6.0)	7.60	13.60	6.30	12.30	3.80	9.80	3.13	9.13	ns
B11a	CLKOUT to $\overline{\text{TA}}$, $\overline{\text{BI}}$ assertion (when driven by the memory controller or PCMCIA interface) (MAX = 0.00 × B1 + 9.30[1])	2.50	9.30	2.50	9.30	2.50	9.30	2.50	9.30	ns
B12	CLKOUT to $\overline{\text{TS}}$, $\overline{\text{BB}}$ negation (MAX = 0.25 × B1 + 4.8)	7.60	12.30	6.30	11.00	3.80	8.50	3.13	7.92	ns
B12a	CLKOUT to $\overline{\text{TA}}$, $\overline{\text{BI}}$ negation (when driven by the memory controller or PCMCIA interface) (MAX = 0.00 × B1 + 9.00)	2.50	9.00	2.50	9.00	2.50	9.00	2.5	9.00	ns
B13	CLKOUT to $\overline{\text{TS}}$, $\overline{\text{BB}}$ High-Z (MIN = 0.25 × B1)	7.60	21.60	6.30	20.30	3.80	14.00	3.13	12.93	ns
B13a	CLKOUT to $\overline{\text{TA}}$, $\overline{\text{BI}}$ High-Z (when driven by the memory controller or PCMCIA interface) (MIN = 0.00 × B1 + 2.5)	2.50	15.00	2.50	15.00	2.50	15.00	2.5	15.00	ns
B14	CLKOUT to $\overline{\text{TEA}}$ assertion (MAX = 0.00 × B1 + 9.00)	2.50	9.00	2.50	9.00	2.50	9.00	2.50	9.00	ns
B15	CLKOUT to $\overline{\text{TEA}}$ High-Z (MIN = 0.00 × B1 + 2.50)	2.50	15.00	2.50	15.00	2.50	15.00	2.50	15.00	ns
B16	$\overline{\text{TA}}$, $\overline{\text{BI}}$ valid to CLKOUT (setup time) (MIN = 0.00 × B1 + 6.00)	6.00	—	6.00	—	6.00	—	6	—	ns
B16a	$\overline{\text{TEA}}$, $\overline{\text{KR}}$, $\overline{\text{RETRY}}$, $\overline{\text{CR}}$ valid to CLKOUT (setup time) (MIN = 0.00 × B1 + 4.5)	4.50	—	4.50	—	4.50	—	4.50	—	ns

Downloaded from Arrow.com.

Table 9. Bus Operation Timings (continued)

Num	Characteristic	33 MHz		40 MHz		66 MHz		80 MHz		Unit
		Min	Max	Min	Max	Min	Max	Min	Max	
B16b	$\overline{BB}$, $\overline{BG}$, $\overline{BR}$, valid to CLKOUT (setup time)[2] (4MIN = 0.00 × B1 + 0.00)	4.00	—	4.00	—	4.00	—	4.00	—	ns
B17	CLKOUT to $\overline{TA}$, $\overline{TEA}$, $\overline{BI}$, $\overline{BB}$, $\overline{BG}$, $\overline{BR}$ valid (hold time) (MIN = 0.00 × B1 + 1.00[3])	1.00	—	1.00	—	2.00	—	2.00	—	ns
B17a	CLKOUT to $\overline{KR}$, $\overline{RETRY}$, $\overline{CR}$ valid (hold time) (MIN = 0.00 × B1 + 2.00)	2.00	—	2.00	—	2.00	—	2.00	—	ns
B18	D(0:31) valid to CLKOUT rising edge (setup time)[4] (MIN = 0.00 × B1 + 6.00)	6.00	—	6.00	—	6.00	—	6.00	—	ns
B19	CLKOUT rising edge to D(0:31) valid (hold time)[4] (MIN = 0.00 × B1 + 1.00[5])	1.00	—	1.00	—	2.00	—	2.00	—	ns
B20	D(0:31) valid to CLKOUT falling edge (setup time)[6] (MIN = 0.00 × B1 + 4.00)	4.00	—	4.00	—	4.00	—	4.00	—	ns
B21	CLKOUT falling edge to D(0:31) valid (hold time)[6] (MIN = 0.00 × B1 + 2.00)	2.00	—	2.00	—	2.00	—	2.00	—	ns
B22	CLKOUT rising edge to $\overline{CS}$ asserted GPCM ACS = 00 (MAX = 0.25 × B1 + 6.3)	7.60	13.80	6.30	12.50	3.80	10.00	3.13	9.43	ns
B22a	CLKOUT falling edge to $\overline{CS}$ asserted GPCM ACS = 10, TRLX = [0 or 1] (MAX = 0.00 × B1 + 8.00)	—	8.00	—	8.00	—	8.00	—	8.00	ns
B22b	CLKOUT falling edge to $\overline{CS}$ asserted GPCM ACS = 11, TRLX = [0 or 1], EBDF = 0 (MAX = 0.25 × B1 + 6.3)	7.60	13.80	6.30	12.50	3.80	10.00	3.13	9.43	ns
B22c	CLKOUT falling edge to $\overline{CS}$ asserted GPCM ACS = 11, TRLX = [0 or 1], EBDF = 1 (MAX = 0.375 × B1 + 6.6)	10.90	18.00	10.90	16.00	5.20	12.30	4.69	10.93	ns
B23	CLKOUT rising edge to $\overline{CS}$ negated GPCM read access, GPCM write access ACS = 00 and CSNT = 0 (MAX = 0.00 × B1 + 8.00)	2.00	8.00	2.00	8.00	2.00	8.00	2.00	8.00	ns
B24	A(0:31) and BADDR(28:30) to $\overline{CS}$ asserted GPCM ACS = 10, TRLX = 0 (MIN = 0.25 × B1 – 2.00)	5.60	—	4.30	—	1.80	—	1.13	—	ns
B24a	A(0:31) and BADDR(28:30) to $\overline{CS}$ asserted GPCM ACS = 11 TRLX = 0 (MIN = 0.50 × B1 – 2.00)	13.20	—	10.50	—	5.60	—	4.25	—	ns
B25	CLKOUT rising edge to $\overline{OE}$, $\overline{WE}$(0:3) asserted (MAX = 0.00 × B1 + 9.00)	—	9.00	—	9.00	—	9.00	—	9.00	ns
B26	CLKOUT rising edge to $\overline{OE}$ negated (MAX = 0.00 × B1 + 9.00)	2.00	9.00	2.00	9.00	2.00	9.00	2.00	9.00	ns
B27	A(0:31) and BADDR(28:30) to $\overline{CS}$ asserted GPCM ACS = 10, TRLX = 1 (MIN = 1.25 × B1 – 2.00)	35.90	—	29.30	—	16.90	—	13.60	—	ns

Downloaded from Arrow.com.

Table 9. Bus Operation Timings (continued)

Num	Characteristic	33 MHz		40 MHz		66 MHz		80 MHz		Unit
		Min	Max	Min	Max	Min	Max	Min	Max	
B27a	A(0:31) and BADDR(28:30) to $\overline{CS}$ asserted GPCM ACS = 11, TRLX = 1 (MIN = 1.50 × B1 – 2.00)	43.50	—	35.50	—	20.70	—	16.75	—	ns
B28	CLKOUT rising edge to $\overline{WE}$(0:3) negated GPCM write access CSNT = 0 (MAX = 0.00 × B1 + 9.00)	—	9.00	—	9.00	—	9.00	—	9.00	ns
B28a	CLKOUT falling edge to $\overline{WE}$(0:3) negated GPCM write access TRLX = 0, CSNT = 1, EBDF = 0 (MAX = 0.25 × B1 + 6.80)	7.60	14.30	6.30	13.00	3.80	10.50	3.13	9.93	ns
B28b	CLKOUT falling edge to $\overline{CS}$ negated GPCM write access TRLX = 0, CSNT = 1 ACS = 10 or ACS = 11, EBDF = 0 (MAX = 0.25 × B1 + 6.80)	—	14.30	—	13.00	—	10.50	—	9.93	ns
B28c	CLKOUT falling edge to $\overline{WE}$(0:3) negated GPCM write access TRLX = 0, CSNT = 1 write access TRLX = 0, CSNT = 1, EBDF = 1 (MAX = 0.375 × B1 + 6.6)	10.90	18.00	10.90	18.00	5.20	12.30	4.69	11.29	ns
B28d	CLKOUT falling edge to $\overline{CS}$ negated GPCM write access TRLX = 0, CSNT = 1, ACS = 10, or ACS = 11, EBDF = 1 (MAX = 0.375 × B1 + 6.6)	—	18.00	—	18.00	—	12.30	—	11.30	ns
B29	$\overline{WE}$(0:3) negated to D(0:31) High-Z GPCM write access, CSNT = 0, EBDF = 0 (MIN = 0.25 × B1 – 2.00)	5.60	—	4.30	—	1.80	—	1.13	—	ns
B29a	$\overline{WE}$(0:3) negated to D(0:31) High-Z GPCM write access, TRLX = 0, CSNT = 1, EBDF = 0 (MIN = 0.50 × B1 – 2.00)	13.20	—	10.50	—	5.60	—	4.25	—	ns
B29b	$\overline{CS}$ negated to D(0:31) High-Z GPCM write access, ACS = 00, TRLX = 0 & CSNT = 0 (MIN = 0.25 × B1 – 2.00)	5.60	—	4.30	—	1.80	—	1.13	—	ns
B29c	$\overline{CS}$ negated to D(0:31) High-Z GPCM write access, TRLX = 0, CSNT = 1, ACS = 10, or ACS = 11 EBDF = 0 (MIN = 0.50 × B1 – 2.00)	13.20	—	10.50	—	5.60	—	4.25	—	ns
B29d	$\overline{WE}$(0:3) negated to D(0:31) High-Z GPCM write access, TRLX = 1, CSNT = 1, EBDF = 0 (MIN = 1.50 × B1 – 2.00)	43.50	—	35.50	—	20.70	—	16.75	—	ns
B29e	$\overline{CS}$ negated to D(0:31) High-Z GPCM write access, TRLX = 1, CSNT = 1, ACS = 10, or ACS = 11 EBDF = 0 (MIN = 1.50 × B1 – 2.00)	43.50	—	35.50	—	20.70	—	16.75	—	ns
B29f	$\overline{WE}$(0:3) negated to D(0:31) High-Z GPCM write access, TRLX = 0, CSNT = 1, EBDF = 1 (MIN = 0.375 × B1 – 6.30)[7]	5.00	—	3.00	—	0.00	—	0.00	—	ns
B29g	$\overline{CS}$ negated to D(0:31) High-Z GPCM write access, TRLX = 0, CSNT = 1 ACS = 10 or ACS = 11, EBDF = 1 (MIN = 0.375 × B1 – 6.30)[7]	5.00	—	3.00	—	0.00	—	0.00	—	ns

Downloaded from Arrow.com.

Table 9. Bus Operation Timings (continued)

Num	Characteristic	33 MHz		40 MHz		66 MHz		80 MHz		Unit
		Min	Max	Min	Max	Min	Max	Min	Max	
B29h	$\overline{WE}$(0:3) negated to D(0:31) High-Z GPCM write access, TRLX = 1, CSNT = 1, EBDF = 1 (MIN = 0.375 × B1 – 3.30)	38.40	—	31.10	—	17.50	—	13.85	—	ns
B29i	$\overline{CS}$ negated to D(0:31) High-Z GPCM write access, TRLX = 1, CSNT = 1, ACS = 10 or ACS = 11, EBDF = 1 (MIN = 0.375 × B1 – 3.30)	38.40	—	31.10	—	17.50	—	13.85	—	ns
B30	$\overline{CS}$, $\overline{WE}$(0:3) negated to A(0:31), BADDR(28:30) Invalid GPCM read/write access[8] (MIN = 0.25 × B1 – 2.00)	5.60	—	4.30	—	1.80	—	1.13	—	ns
B30a	$\overline{WE}$(0:3) negated to A(0:31), BADDR(28:30) Invalid GPCM, write access, TRLX = 0, CSNT = 1, $\overline{CS}$ negated to A(0:31) invalid GPCM write access TRLX = 0, CSNT =1 ACS = 10, or ACS == 11, EBDF = 0 (MIN = 0.50 × B1 – 2.00)	13.20	—	10.50	—	5.60	—	4.25	—	ns
B30b	$\overline{WE}$(0:3) negated to A(0:31) invalid GPCM BADDR(28:30) invalid GPCM write access, TRLX = 1, CSNT = 1. $\overline{CS}$ negated to A(0:31) invalid GPCM write access TRLX = 1, CSNT = 1, ACS = 10, or ACS == 11 EBDF = 0 (MIN = 1.50 × B1 – 2.00)	43.50	—	35.50	—	20.70	—	16.75	—	ns
B30c	$\overline{WE}$(0:3) negated to A(0:31), BADDR(28:30) invalid GPCM write access, TRLX = 0, CSNT = 1. $\overline{CS}$ negated to A(0:31) invalid GPCM write access, TRLX = 0, CSNT = 1 ACS = 10, ACS == 11, EBDF = 1 (MIN = 0.375 × B1 – 3.00)	8.40	—	6.40	—	2.70	—	1.70	—	ns
B30d	$\overline{WE}$(0:3) negated to A(0:31), BADDR(28:30) invalid GPCM write access TRLX = 1, CSNT =1, $\overline{CS}$ negated to A(0:31) invalid GPCM write access TRLX = 1, CSNT = 1, ACS = 10 or 11, EBDF = 1	38.67	—	31.38	—	17.83	—	14.19	—	ns
B31	CLKOUT falling edge to $\overline{CS}$ valid, as requested by control bit CST4 in the corresponding word in the UPM (MAX = 0.00 × B1 + 6.00)	1.50	6.00	1.50	6.00	1.50	6.00	1.50	6.00	ns
B31a	CLKOUT falling edge to $\overline{CS}$ valid, as requested by control bit CST1 in the corresponding word in the UPM (MAX = 0.25 × B1 + 6.80)	7.60	14.30	6.30	13.00	3.80	10.50	3.13	10.00	ns
B31b	CLKOUT rising edge to $\overline{CS}$ valid, as requested by control bit CST2 in the corresponding word in the UPM (MAX = 0.00 × B1 + 8.00)	1.50	8.00	1.50	8.00	1.50	8.00	1.50	8.00	ns
B31c	CLKOUT rising edge to $\overline{CS}$ valid, as requested by control bit CST3 in the corresponding word in the UPM (MAX = 0.25 × B1 + 6.30)	7.60	13.80	6.30	12.50	3.80	10.00	3.13	9.40	ns
B31d	CLKOUT falling edge to $\overline{CS}$ valid, as requested by control bit CST1 in the corresponding word in the UPM EBDF = 1 (MAX = 0.375 × B1 + 6.6)	13.30	18.00	11.30	16.00	7.60	12.30	4.69	11.30	ns

Downloaded from Arrow.com.

Table 9. Bus Operation Timings (continued)

Num	Characteristic	33 MHz		40 MHz		66 MHz		80 MHz		Unit
		Min	Max	Min	Max	Min	Max	Min	Max	
B32	CLKOUT falling edge to $\overline{BS}$ valid, as requested by control bit BST4 in the corresponding word in the UPM (MAX = 0.00 × B1 + 6.00)	1.50	6.00	1.50	6.00	1.50	6.00	1.50	6.00	ns
B32a	CLKOUT falling edge to $\overline{BS}$ valid, as requested by control bit BST1 in the corresponding word in the UPM, EBDF = 0 (MAX = 0.25 × B1 + 6.80)	7.60	14.30	6.30	13.00	3.80	10.50	3.13	10.00	ns
B32b	CLKOUT rising edge to $\overline{BS}$ valid, as requested by control bit BST2 in the corresponding word in the UPM (MAX = 0.00 × B1 + 8.00)	1.50	8.00	1.50	8.00	1.50	8.00	1.50	8.00	ns
B32c	CLKOUT rising edge to $\overline{BS}$ valid, as requested by control bit BST3 in the corresponding word in the UPM (MAX = 0.25 × B1 + 6.80)	7.60	14.30	6.30	13.00	3.80	10.50	3.13	10.00	ns
B32d	CLKOUT falling edge to $\overline{BS}$ valid, as requested by control bit BST1 in the corresponding word in the UPM, EBDF = 1 (MAX = 0.375 × B1 + 6.60)	13.30	18.00	11.30	16.00	7.60	12.30	4.49	11.30	ns
B33	CLKOUT falling edge to $\overline{GPL}$ valid, as requested by control bit GxT4 in the corresponding word in the UPM (MAX = 0.00 × B1 + 6.00)	1.50	6.00	1.50	6.00	1.50	6.00	1.50	6.00	ns
B33a	CLKOUT rising edge to $\overline{GPL}$ valid, as requested by control bit GxT3 in the corresponding word in the UPM (MAX = 0.25 × B1 + 6.80)	7.60	14.30	6.30	13.00	3.80	10.50	3.13	10.00	ns
B34	A(0:31), BADDR(28:30), and D(0:31) to $\overline{CS}$ valid, as requested by control bit CST4 in the corresponding word in the UPM (MIN = 0.25 × B1 – 2.00)	5.60	—	4.30	—	1.80	—	1.13	—	ns
B34a	A(0:31), BADDR(28:30), and D(0:31) to $\overline{CS}$ valid, as requested by control bit CST1 in the corresponding word in the UPM (MIN = 0.50 × B1 – 2.00)	13.20	—	10.50	—	5.60	—	4.25	—	ns
B34b	A(0:31), BADDR(28:30), and D(0:31) to $\overline{CS}$ valid, as requested by CST2 in the corresponding word in UPM (MIN = 0.75 × B1 – 2.00)	20.70	—	16.70	—	9.40	—	6.80	—	ns
B35	A(0:31), BADDR(28:30) to $\overline{CS}$ valid, as requested by control bit BST4 in the corresponding word in the UPM (MIN = 0.25 × B1 – 2.00)	5.60	—	4.30	—	1.80	—	1.13	—	ns
B35a	A(0:31), BADDR(28:30), and D(0:31) to $\overline{BS}$ valid, as requested by BST1 in the corresponding word in the UPM (MIN = 0.50 × B1 – 2.00)	13.20	—	10.50	—	5.60	—	4.25	—	ns
B35b	A(0:31), BADDR(28:30), and D(0:31) to $\overline{BS}$ valid, as requested by control bit BST2 in the corresponding word in the UPM (MIN = 0.75 × B1 – 2.00)	20.70	—	16.70	—	9.40	—	7.40	—	ns

Downloaded from Arrow.com.

Table 9. Bus Operation Timings (continued)

Num	Characteristic	33 MHz		40 MHz		66 MHz		80 MHz		Unit
		Min	Max	Min	Max	Min	Max	Min	Max	
B36	A(0:31), BADDR(28:30), and D(0:31) to $\overline{GPL}$ valid, as requested by control bit GxT4 in the corresponding word in the UPM (MIN = 0.25 × B1 – 2.00)	5.60	—	4.30	—	1.80	—	1.13	—	ns
B37	UPWAIT valid to CLKOUT falling edge[9] (MIN = 0.00 × B1 + 6.00)	6.00	—	6.00	—	6.00	—	6.00	—	ns
B38	CLKOUT falling edge to UPWAIT valid [9] (MIN = 0.00 × B1 + 1.00)	1.00	—	1.00	—	1.00	—	1.00	—	ns
B39	$\overline{AS}$ valid to CLKOUT rising edge[10] (MIN = 0.00 × B1 + 7.00)	7.00	—	7.00	—	7.00	—	7.00	—	ns
B40	A(0:31), TSIZ(0:1), RD/$\overline{WR}$, $\overline{BURST}$, valid to CLKOUT rising edge (MIN = 0.00 × B1 + 7.00)	7.00	—	7.00	—	7.00	—	7.00	—	ns
B41	$\overline{TS}$ valid to CLKOUT rising edge (setup time) (MIN = 0.00 × B1 + 7.00)	7.00	—	7.00	—	7.00	—	7.00	—	ns
B42	CLKOUT rising edge to $\overline{TS}$ valid (hold time) (MIN = 0.00 × B1 + 2.00)	2.00	—	2.00	—	2.00	—	2.00	—	ns
B43	$\overline{AS}$ negation to memory controller signals negation (MAX = TBD)	—	TBD	—	TBD	—	TBD	—	TBD	ns

1 For part speeds above 50 MHz, use 9.80 ns for B11a.
2 The timing required for $\overline{BR}$ input is relevant when the MPC885/MPC880 is selected to work with the internal bus arbiter. The timing for $\overline{BG}$ input is relevant when the MPC885/MPC880 is selected to work with the external bus arbiter.
3 For part speeds above 50 MHz, use 2 ns for B17.
4 The D(0:31) input timings B18 and B19 refer to the rising edge of the CLKOUT in which the $\overline{TA}$ input signal is asserted.
5 For part speeds above 50 MHz, use 2 ns for B19.
6 The D(0:31) input timings B20 and B21 refer to the falling edge of the CLKOUT. This timing is valid only for read accesses controlled by chip-selects under control of the user-programmable machine (UPM) in the memory controller, for data beats where DLT3 = 1 in the RAM words. (This is only the case where data is latched on the falling edge of CLKOUT.)
7 This formula applies to bus operation up to 50 MHz.
8 The timing B30 refers to $\overline{CS}$ when ACS = 00 and to $\overline{CS}$ and $\overline{WE}$(0:3) when CSNT = 0.
9 The signal UPWAIT is considered asynchronous to the CLKOUT and synchronized internally. The timings specified in B37 and B38 are specified to enable the freeze of the UPM output signals as described in Figure 21.
10 The $\overline{AS}$ signal is considered asynchronous to the CLKOUT. The timing B39 is specified in order to allow the behavior specified in Figure 24.

Downloaded from Arrow.com.

Figure 6 provides the control timing diagram.

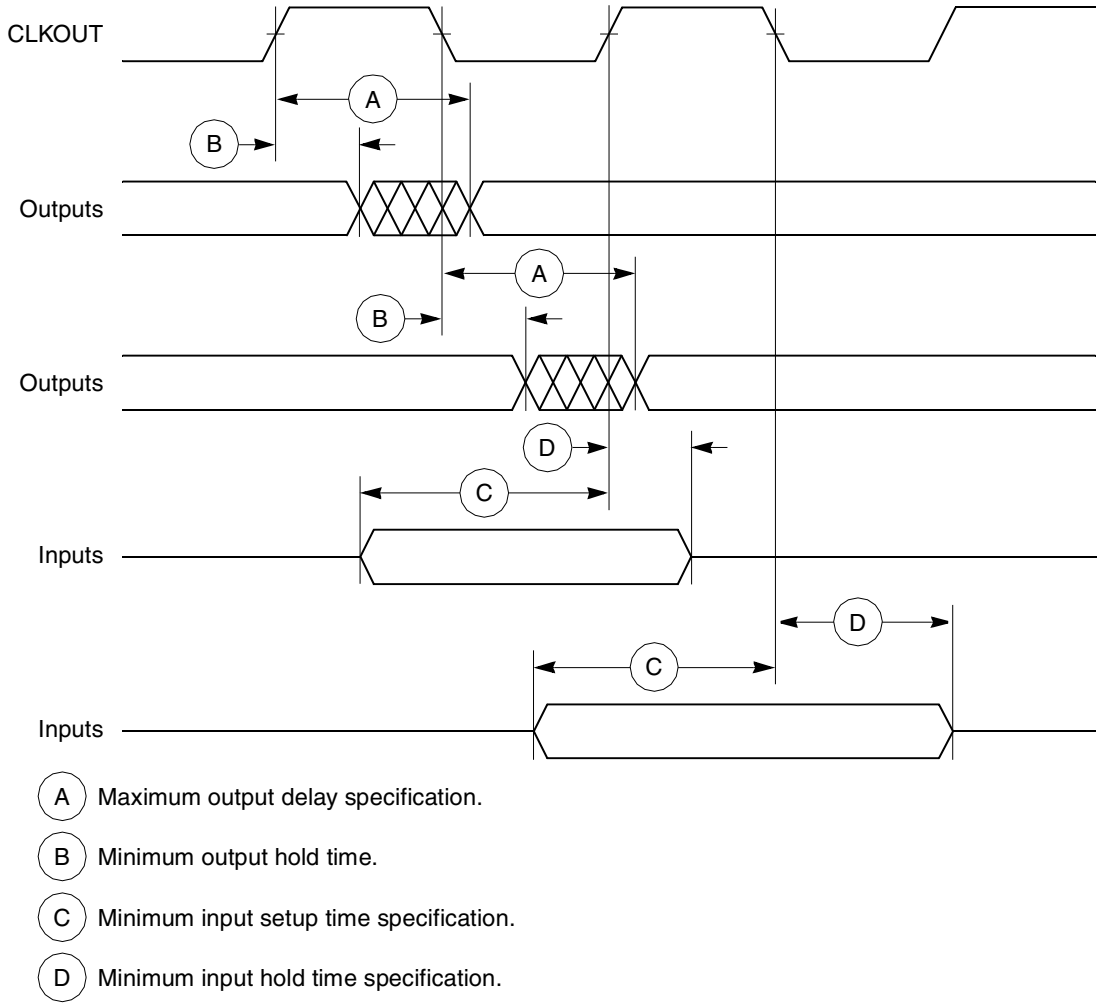

Figure 6. Control Timing

Figure 7 provides the timing for the external clock.

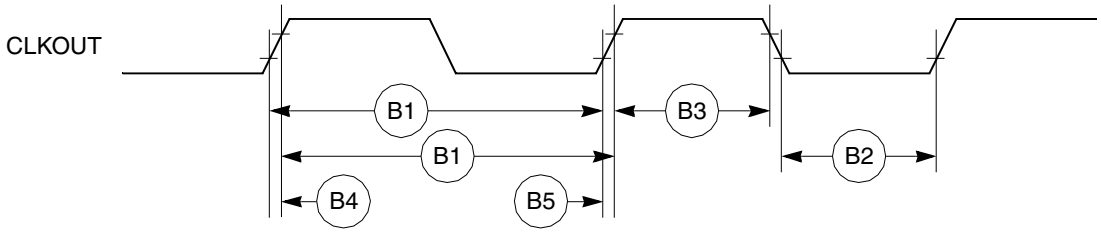

Figure 7. External Clock Timing

Downloaded from Arrow.com.

Figure 8 provides the timing for the synchronous output signals.

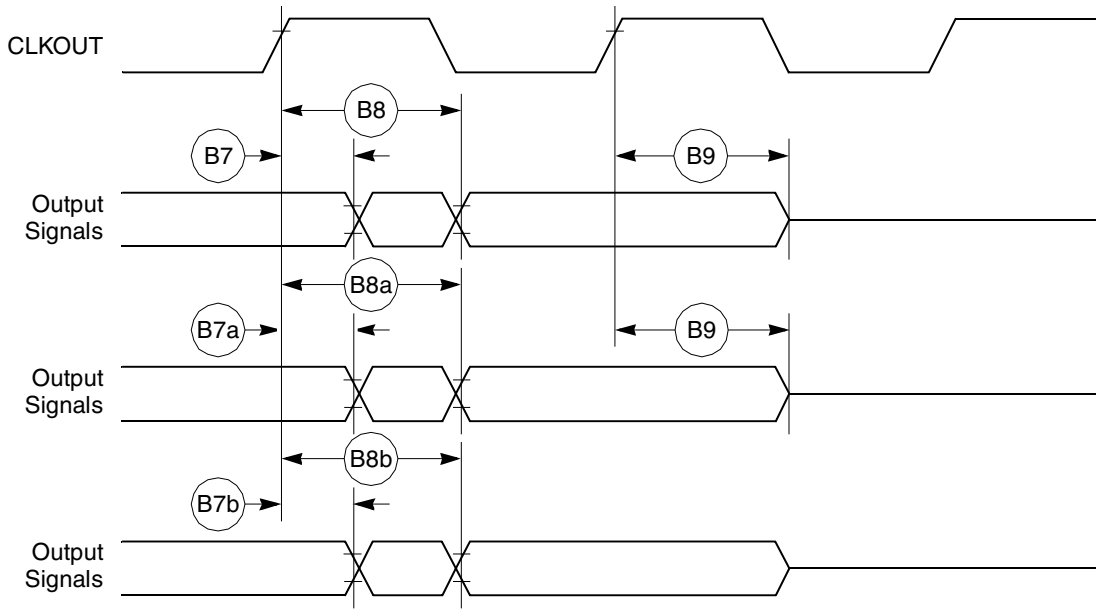

Figure 8. Synchronous Output Signals Timing

Figure 9 provides the timing for the synchronous active pull-up and open-drain output signals.

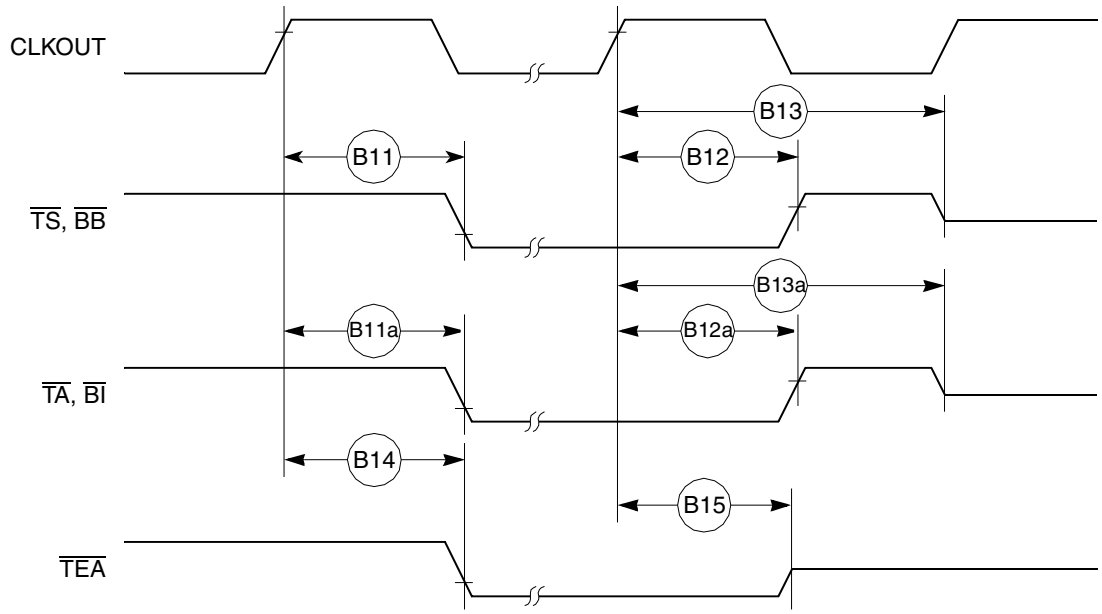

Figure 9. Synchronous Active Pull-Up Resistor and Open-Drain Outputs Signals Timing

Downloaded from Arrow.com.

Figure 10 provides the timing for the synchronous input signals.

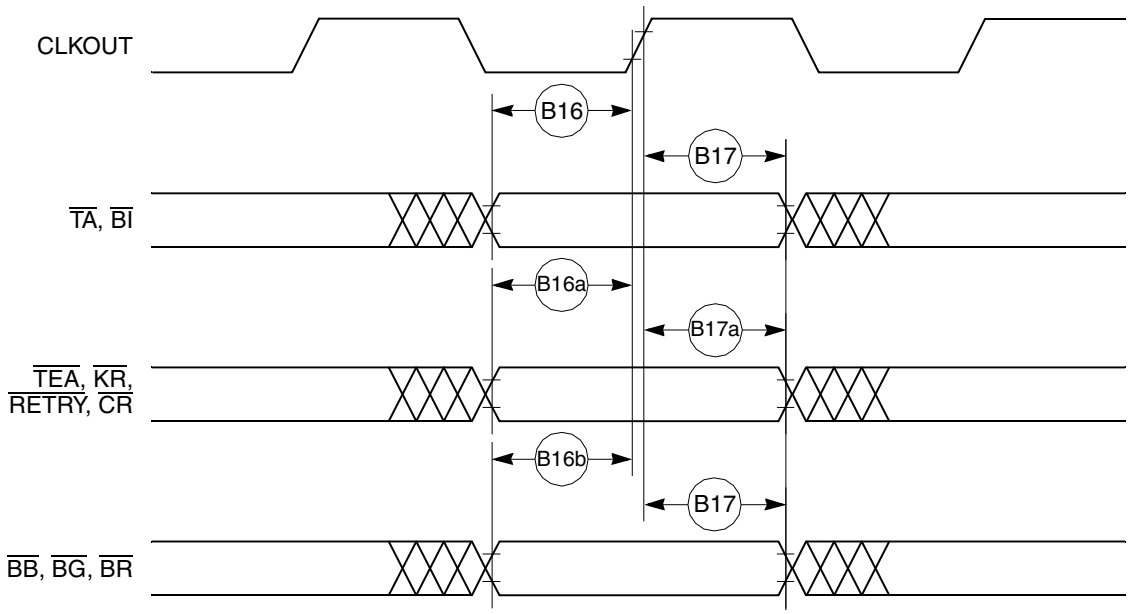

Figure 10. Synchronous Input Signals Timing

Figure 11 provides normal case timing for input data. It also applies to normal read accesses under the control of the user-programmable machine (UPM) in the memory controller.

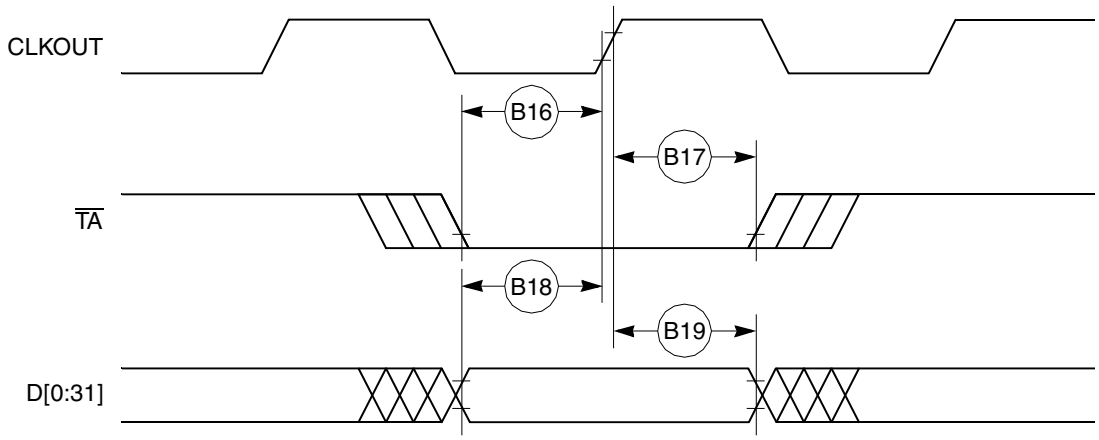

Figure 11. Input Data Timing in Normal Case

Downloaded from Arrow.com.

Figure 12 provides the timing for the input data controlled by the UPM for data beats where DLT3 = 1 in the UPM RAM words. (This is only the case where data is latched on the falling edge of CLKOUT.)

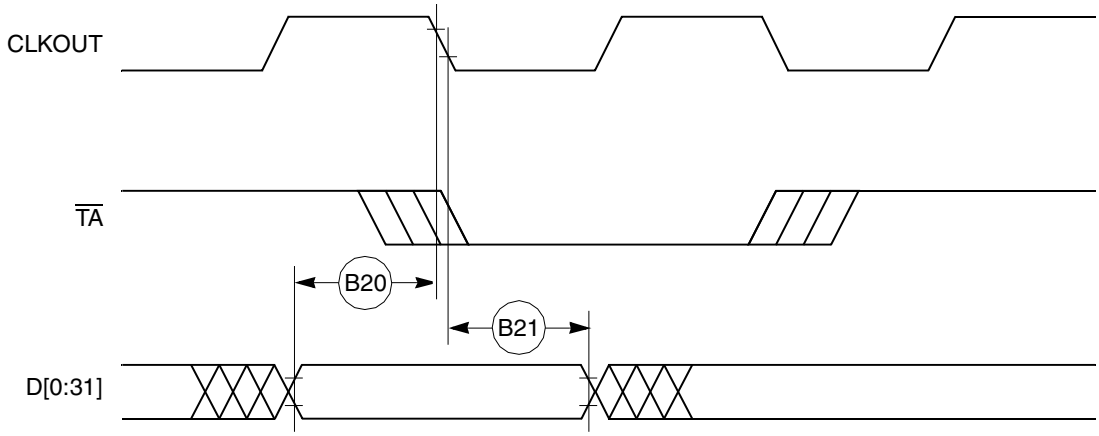

Figure 12. Input Data Timing when Controlled by UPM in the Memory Controller and DLT3 = 1

Figure 13 through Figure 16 provide the timing for the external bus read controlled by various GPCM factors.

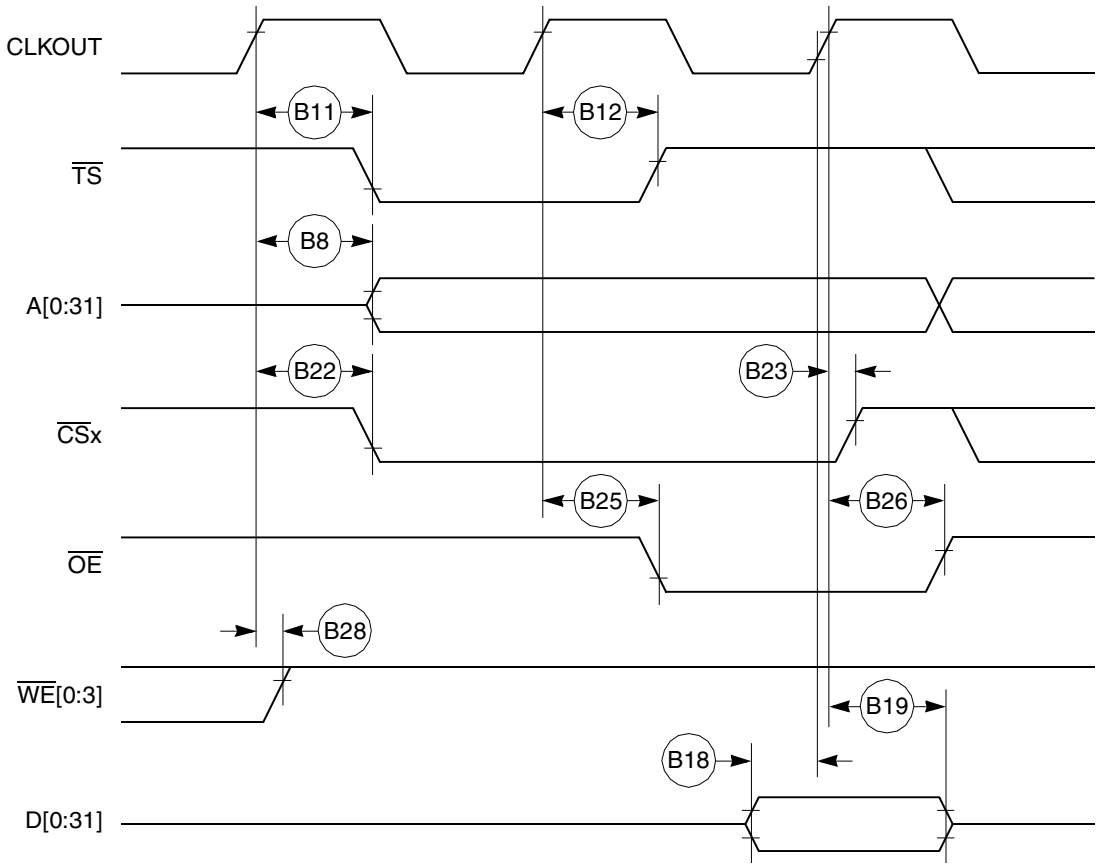

Figure 13. External Bus Read Timing (GPCM Controlled—ACS = 00)

Downloaded from Arrow.com.

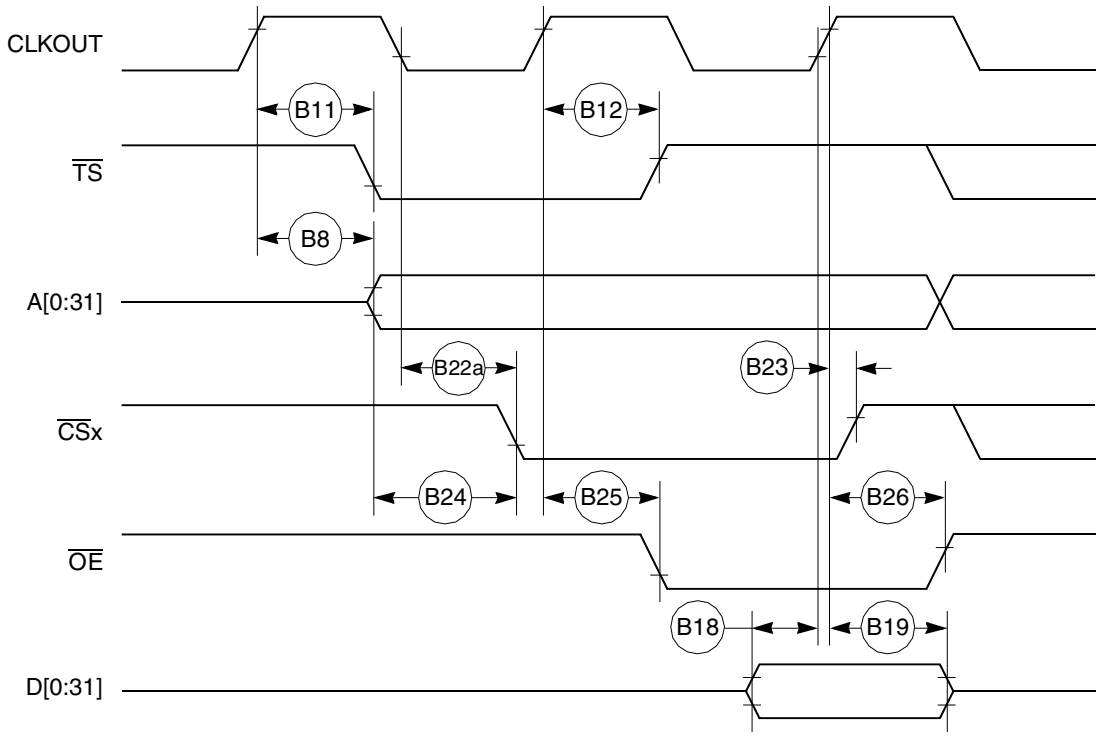

Figure 14. External Bus Read Timing (GPCM Controlled—TRLX = 0, ACS = 10)

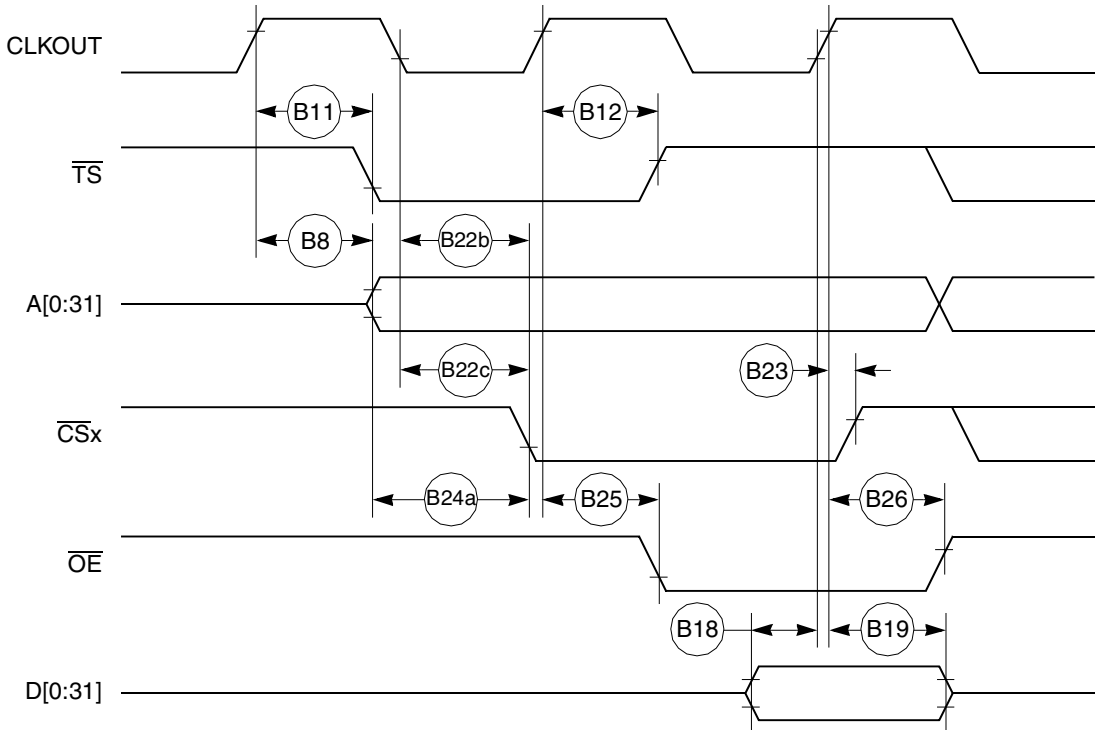

Figure 15. External Bus Read Timing (GPCM Controlled—TRLX = 0, ACS = 11)

Downloaded from Arrow.com.

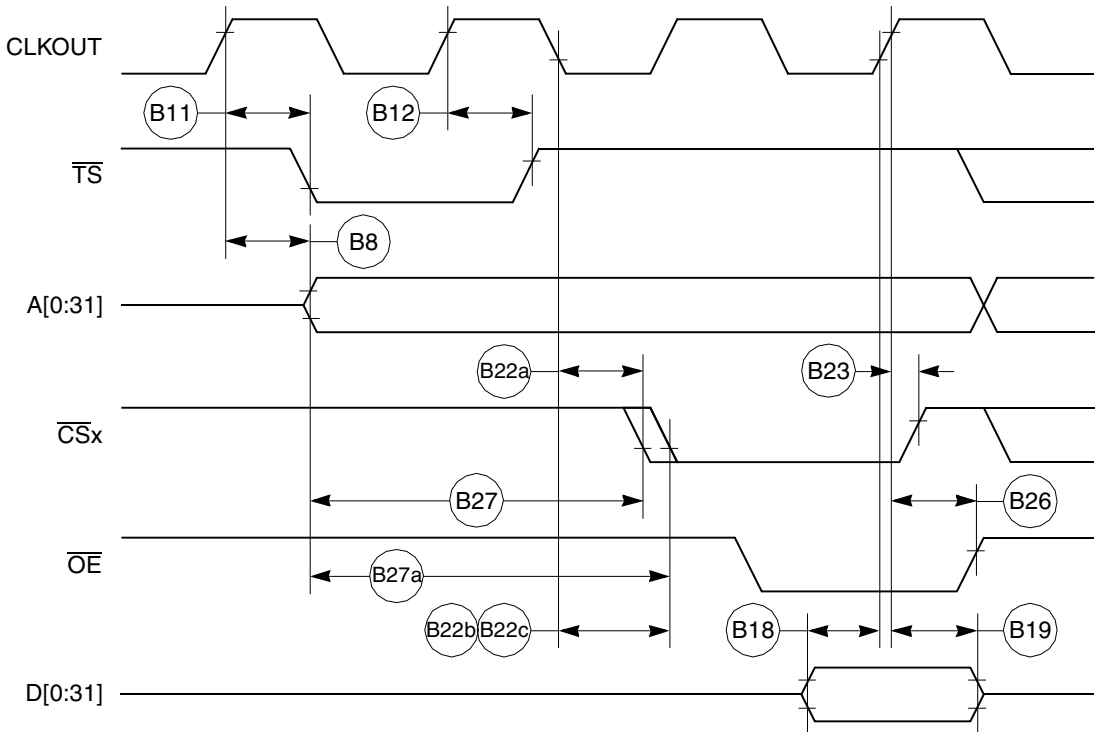

Figure 16. External Bus Read Timing (GPCM Controlled—TRLX = 1, ACS = 10, ACS = 11)

Downloaded from Arrow.com.

Figure 17 through Figure 19 provide the timing for the external bus write controlled by various GPCM factors.

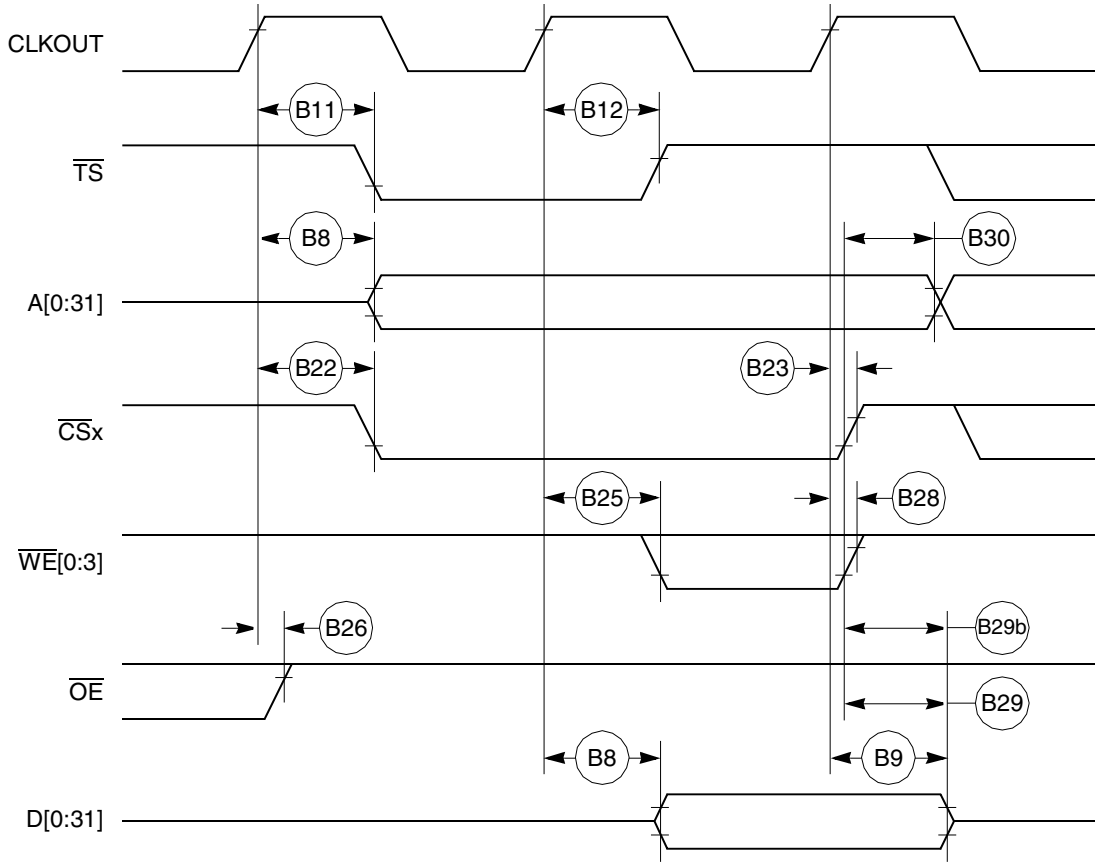

Figure 17. External Bus Write Timing (GPCM Controlled—TRLX = 0, CSNT = 0)

Downloaded from Arrow.com.

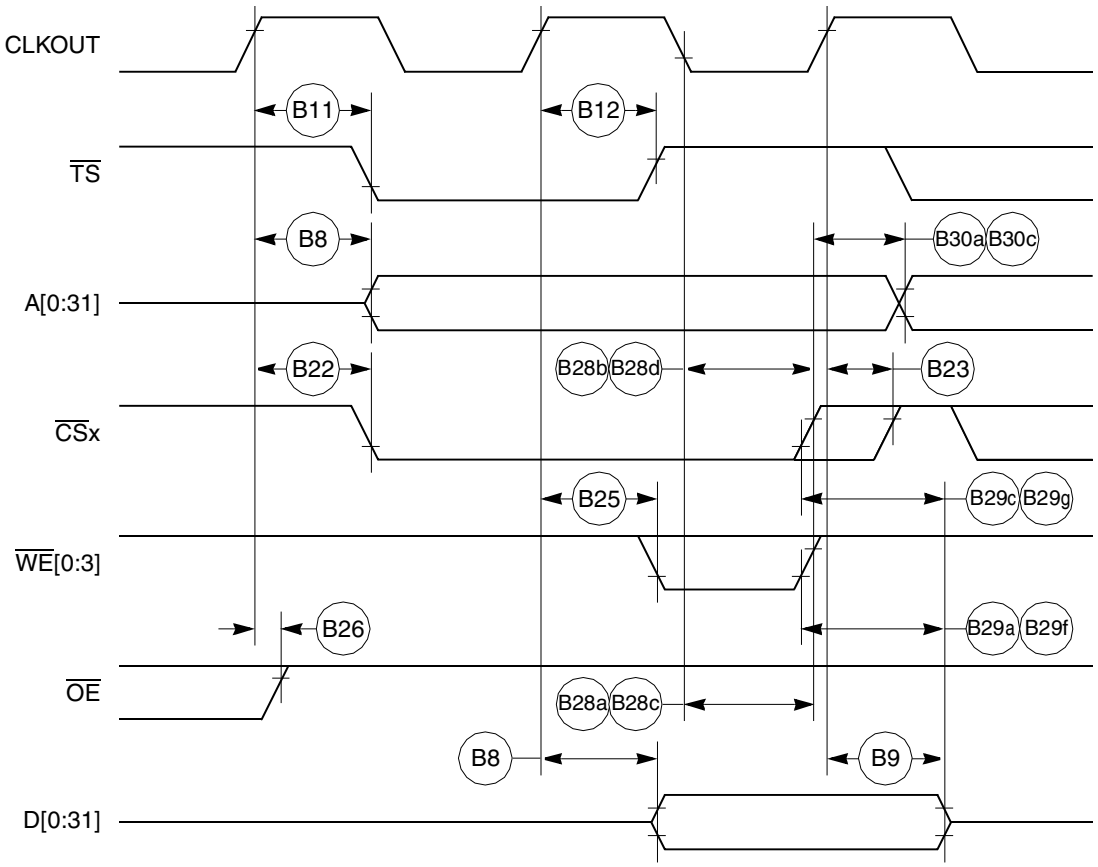

Figure 18. External Bus Write Timing (GPCM Controlled—TRLX = 0, CSNT = 1)

Downloaded from Arrow.com.

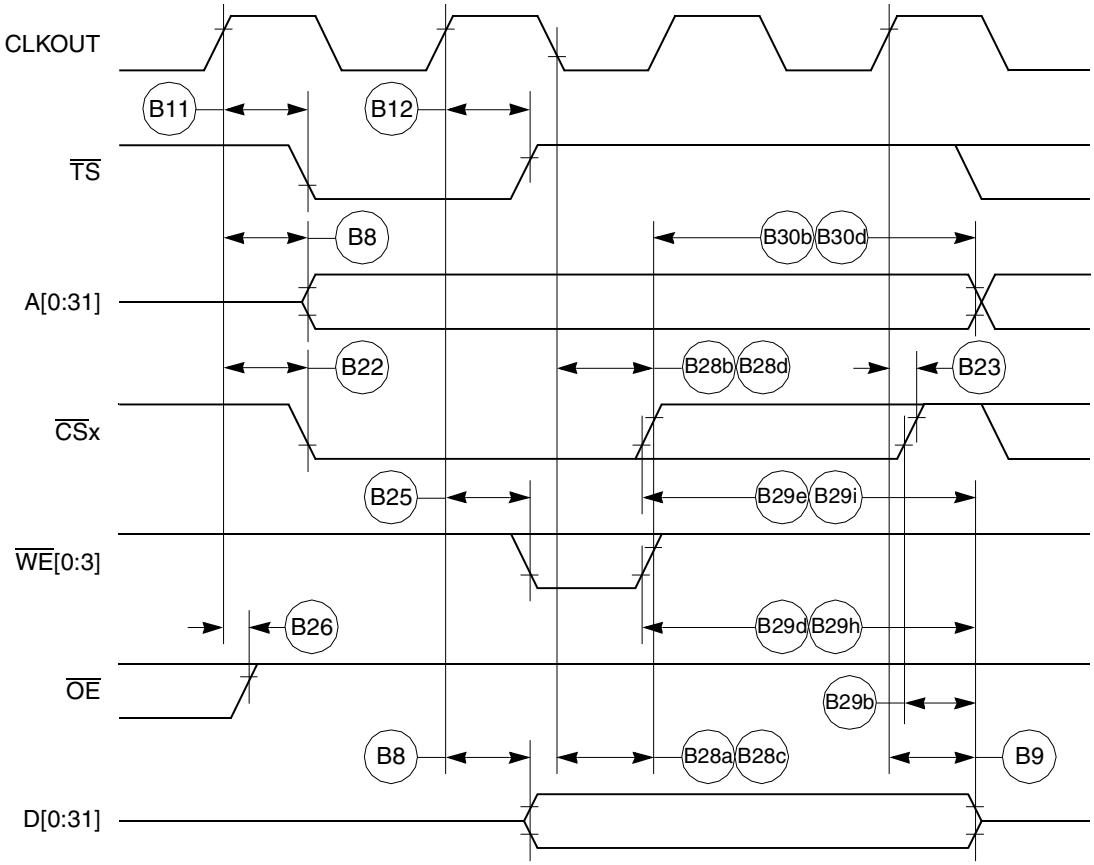

Figure 19. External Bus Write Timing (GPCM Controlled—TRLX = 1, CSNT = 1)

Downloaded from Arrow.com.

Figure 20 provides the timing for the external bus controlled by the UPM.

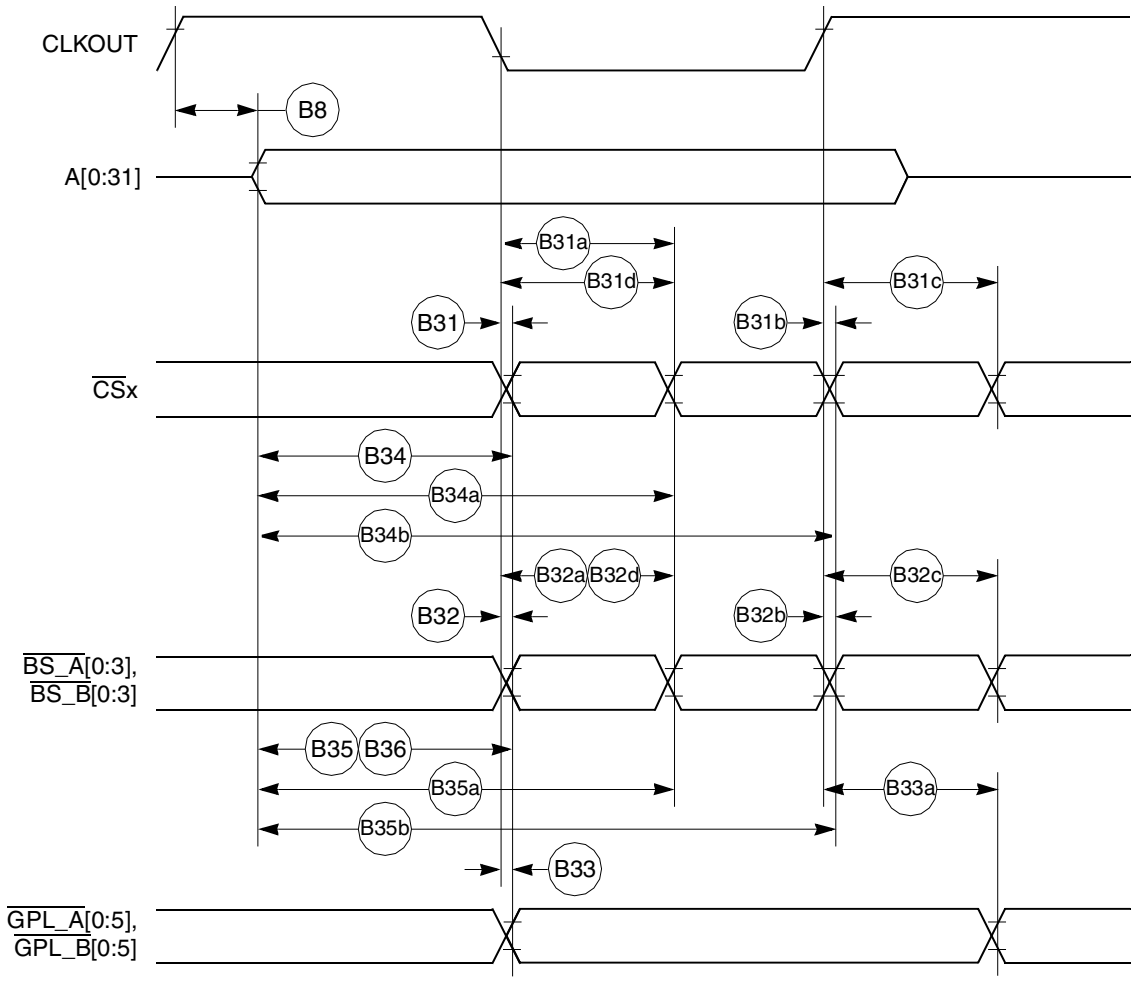

Figure 20. External Bus Timing (UPM-Controlled Signals)

Downloaded from Arrow.com.

Figure 21 provides the timing for the asynchronous asserted UPWAIT signal controlled by the UPM.

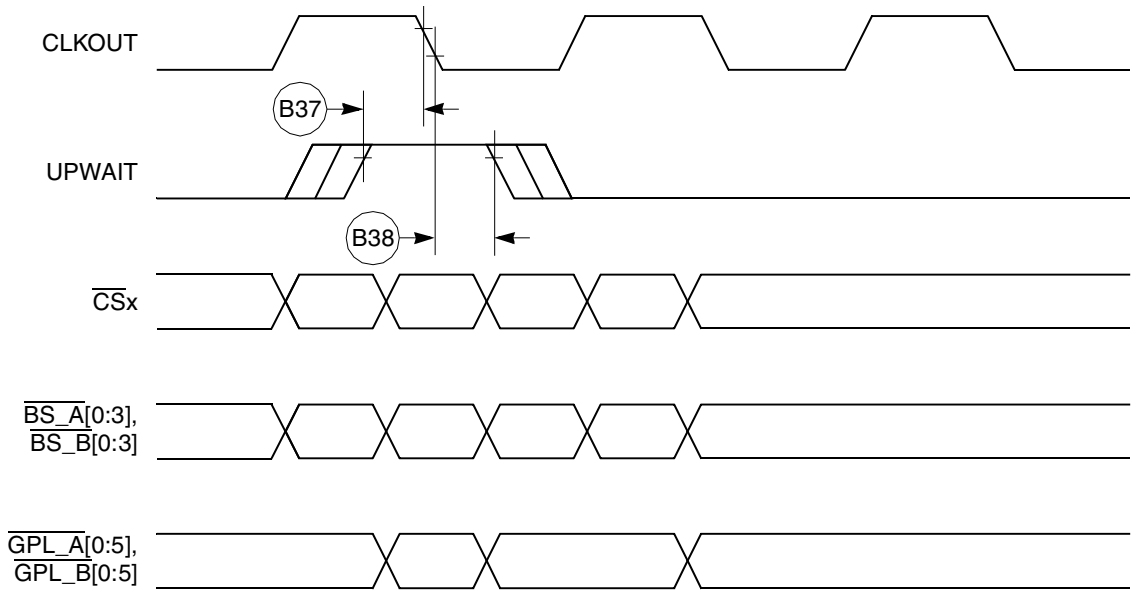

Figure 21. Asynchronous UPWAIT Asserted Detection in UPM-Handled Cycles Timing

Figure 22 provides the timing for the asynchronous negated UPWAIT signal controlled by the UPM.

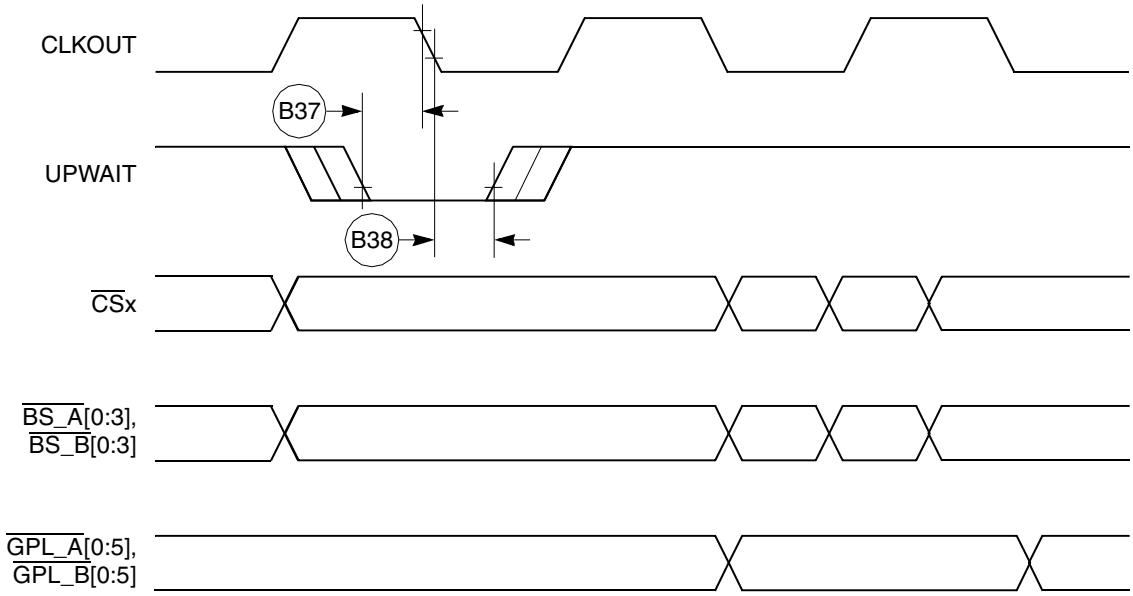

Figure 22. Asynchronous UPWAIT Negated Detection in UPM-Handled Cycles Timing

Downloaded from Arrow.com.

Figure 23 provides the timing for the synchronous external master access controlled by the GPCM.

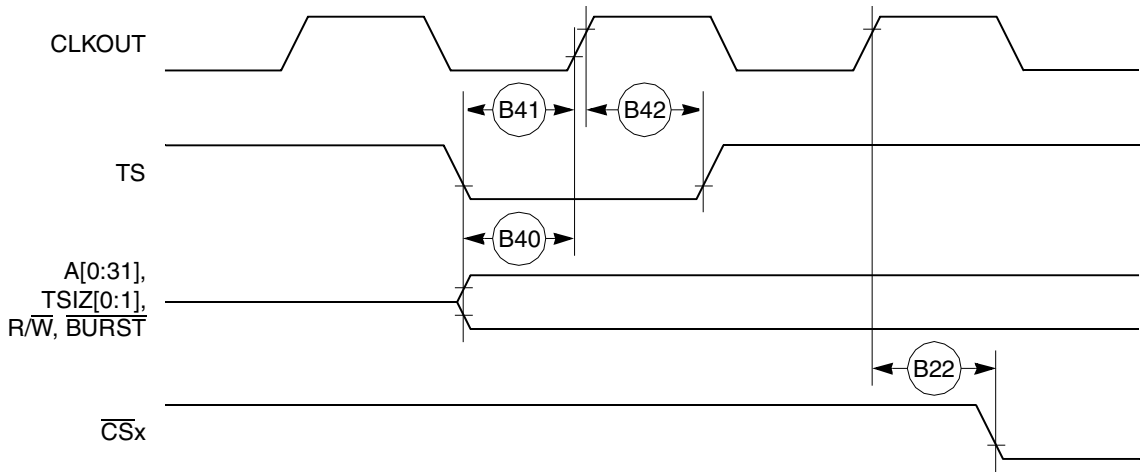

Figure 23. Synchronous External Master Access Timing (GPCM Handled—ACS = 00)

Figure 24 provides the timing for the asynchronous external master memory access controlled by the GPCM.

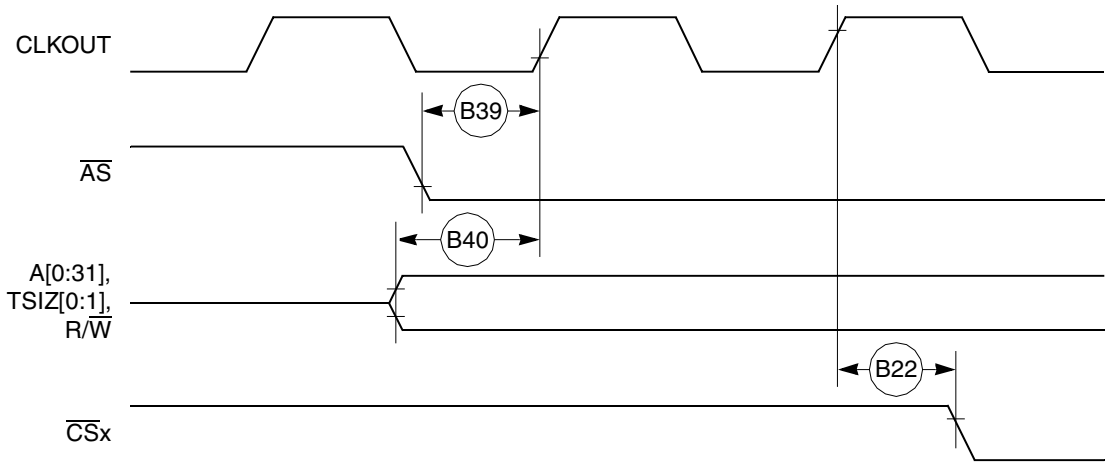

Figure 24. Asynchronous External Master Memory Access Timing (GPCM Controlled—ACS = 00)

Figure 25 provides the timing for the asynchronous external master control signals negation.

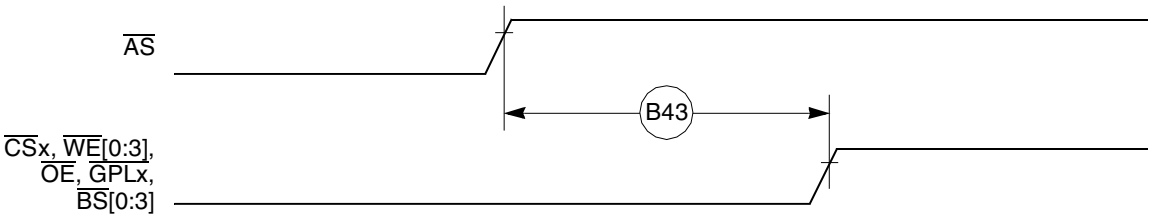

Figure 25. Asynchronous External Master—Control Signals Negation Timing

Downloaded from Arrow.com.

Table 10 provides the interrupt timing for the MPC885/MPC880.

Table 10. Interrupt Timing

Num	Characteristic[1]	All Frequencies		Unit
		Min	Max	
I39	$\overline{\text{IRQ}}$x valid to CLKOUT rising edge (setup time)	6.00		ns
I40	$\overline{\text{IRQ}}$x hold time after CLKOUT	2.00		ns
I41	$\overline{\text{IRQ}}$x pulse width low	3.00		ns
I42	$\overline{\text{IRQ}}$x pulse width high	3.00		ns
I43	$\overline{\text{IRQ}}$x edge-to-edge time	$4 \times T_{CLOCKOUT}$		—

1 The I39 and I40 timings describe the testing conditions under which the $\overline{\text{IRQ}}$ lines are tested when being defined as level sensitive. The $\overline{\text{IRQ}}$ lines are synchronized internally and do not have to be asserted or negated with reference to the CLKOUT. The I41, I42, and I43 timings are specified to allow correct functioning of the $\overline{\text{IRQ}}$ lines detection circuitry and have no direct relation with the total system interrupt latency that the MPC885/MPC880 is able to support.

Figure 26 provides the interrupt detection timing for the external level-sensitive lines.

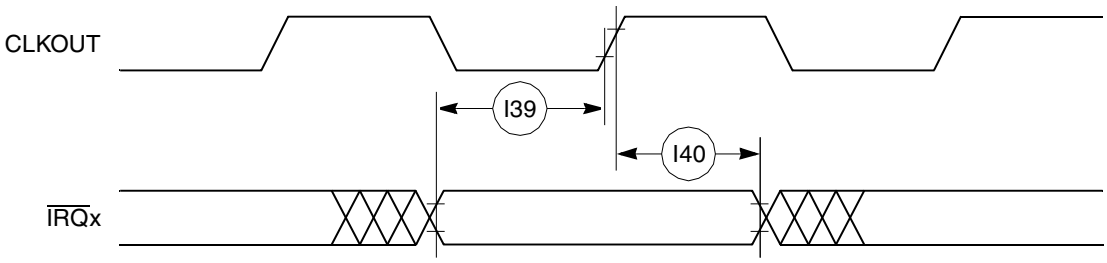

Figure 26. Interrupt Detection Timing for External Level Sensitive Lines

Figure 27 provides the interrupt detection timing for the external edge-sensitive lines.

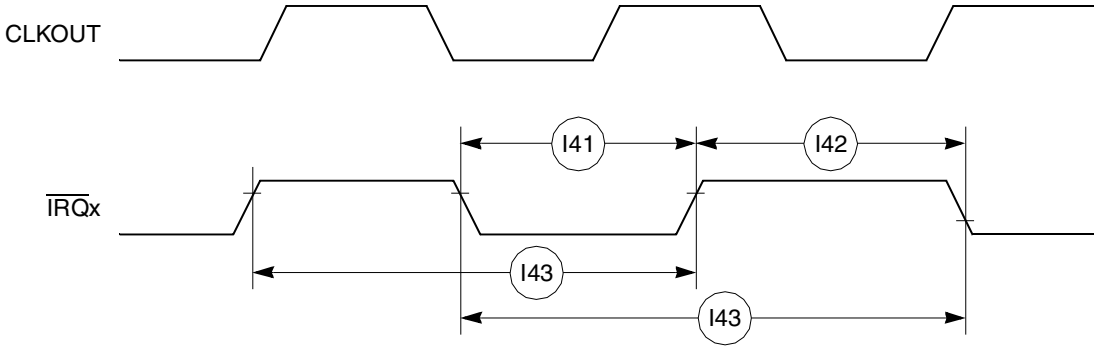

Figure 27. Interrupt Detection Timing for External Edge Sensitive Lines

Downloaded from Arrow.com.

Table 11 shows the PCMCIA timing for the MPC885/MPC880.

Table 11. PCMCIA Timing

Num	Characteristic	33 MHz		40 MHz		66 MHz		80 MHz		Unit
		Min	Max	Min	Max	Min	Max	Min	Max	
P44	A(0:31), $\overline{\text{REG}}$ valid to PCMCIA strobe asserted[1] (MIN = 0.75 × B1 – 2.00)	20.70	—	16.70	—	9.40	—	7.40	—	ns
P45	A(0:31), $\overline{\text{REG}}$ valid to ALE negation[1] (MIN = 1.00 × B1 – 2.00)	28.30	—	23.00	—	13.20	—	10.50	—	ns
P46	CLKOUT to $\overline{\text{REG}}$ valid (MAX = 0.25 × B1 + 8.00)	7.60	15.60	6.30	14.30	3.80	11.80	3.13	11.13	ns
P47	CLKOUT to $\overline{\text{REG}}$ invalid (MIN = 0.25 – B1 + 1.00)	8.60	—	7.30	—	4.80	—	4.13	—	ns
P48	CLKOUT to $\overline{\text{CE1}}$, $\overline{\text{CE2}}$ asserted (MAX = 0.25 × B1 + 8.00)	7.60	15.60	6.30	14.30	3.80	11.80	3.13	11.13	ns
P49	CLKOUT to $\overline{\text{CE1}}$, $\overline{\text{CE2}}$ negated (MAX = 0.25 × B1 + 8.00)	7.60	15.60	6.30	14.30	3.80	11.80	3.13	11.13	ns
P50	CLKOUT to $\overline{\text{PCOE}}$, $\overline{\text{IORD}}$, $\overline{\text{PCWE}}$, $\overline{\text{IOWR}}$ assert time (MAX = 0.00 × B1 + 11.00)	—	11.00	—	11.00	—	11.00	—	11.00	ns
P51	CLKOUT to $\overline{\text{PCOE}}$, $\overline{\text{IORD}}$, $\overline{\text{PCWE}}$, $\overline{\text{IOWR}}$ negate time (MAX = 0.00 × B1 + 11.00)	2.00	11.00	2.00	11.00	2.00	11.00	2.00	11.00	ns
P52	CLKOUT to ALE assert time (MAX = 0.25 × B1 + 6.30)	7.60	13.80	6.30	12.50	3.80	10.00	3.13	9.40	ns
P53	CLKOUT to ALE negate time (MAX = 0.25 × B1 + 8.00)	—	15.60	—	14.30	—	11.80	—	11.13	ns
P54	$\overline{\text{PCWE}}$, $\overline{\text{IOWR}}$ negated to D(0:31) invalid [1] (MIN = 0.25 × B1 – 2.00)	5.60	—	4.30	—	1.80	—	1.13	—	ns
P55	$\overline{\text{WAITA}}$ and $\overline{\text{WAITB}}$ valid to CLKOUT rising edge[1] (MIN = 0.00 × B1 + 8.00)	8.00	—	8.00	—	8.00	—	8.00	—	ns
P56	CLKOUT rising edge to $\overline{\text{WAITA}}$ and $\overline{\text{WAITB}}$ invalid[1] (MIN = 0.00 × B1 + 2.00)	2.00	—	2.00	—	2.00	—	2.00	—	ns

[1] PSST = 1. Otherwise add PSST times cycle time.
PSHT = 0. Otherwise add PSHT times cycle time.

These synchronous timings define when the $\overline{\text{WAITx}}$ signals are detected in order to freeze (or relieve) the PCMCIA current cycle. The $\overline{\text{WAITx}}$ assertion will be effective only if it is detected 2 cycles before the PSL timer expiration. See Chapter 16, “PCMCIA Interface,” in the *MPC885 PowerQUICC™ Family Reference Manual*.

Downloaded from Arrow.com.

Figure 28 provides the PCMCIA access cycle timing for the external bus read.

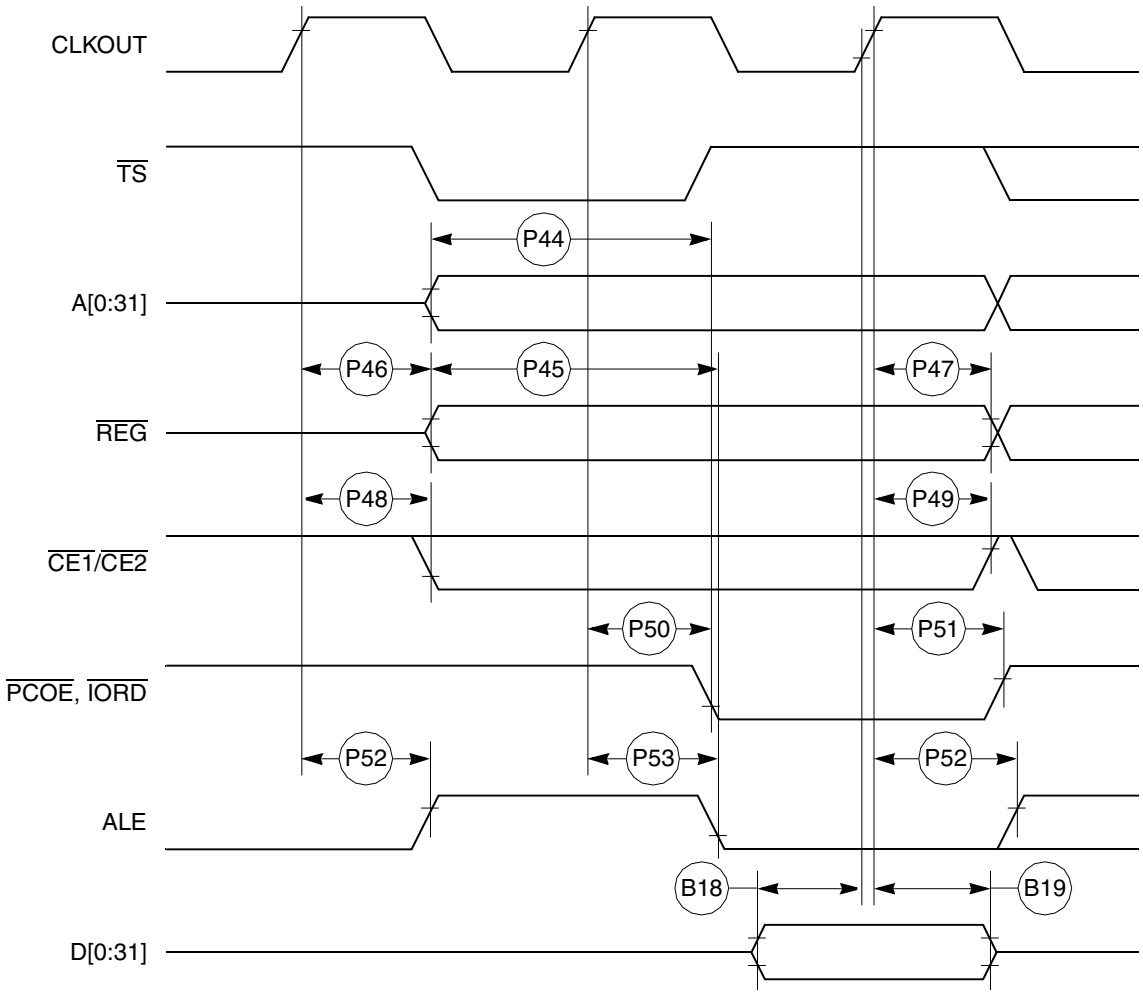

Figure 28. PCMCIA Access Cycles Timing External Bus Read

Downloaded from Arrow.com.

Figure 29 provides the PCMCIA access cycle timing for the external bus write.

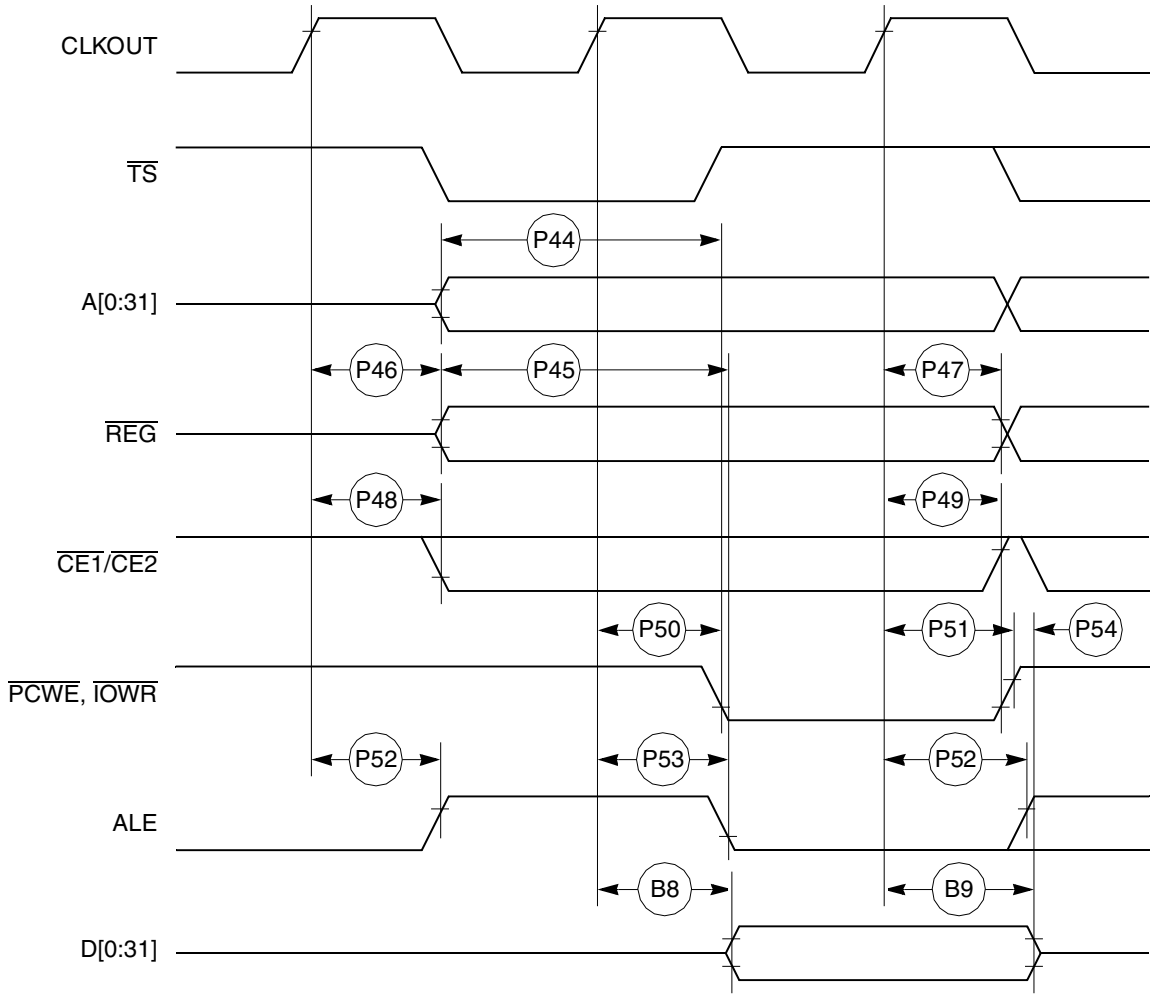

Figure 29. PCMCIA Access Cycles Timing External Bus Write

Figure 30 provides the PCMCIA WAIT signals detection timing.

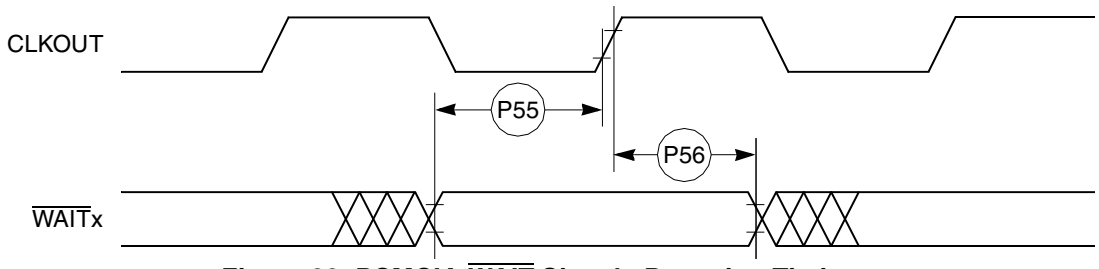

Figure 30. PCMCIA WAIT Signals Detection Timing

Downloaded from Arrow.com.

Table 12 shows the PCMCIA port timing for the MPC885/MPC880.

Table 12. PCMCIA Port Timing

Num	Characteristic	33 MHz		40 MHz		66 MHz		80 MHz		Unit
		Min	Max	Min	Max	Min	Max	Min	Max	
P57	CLKOUT to OPx valid (MAX = 0.00 × B1 + 19.00)	—	19.00	—	19.00	—	19.00	—	19.00	ns
P58	$\overline{\text{HRESET}}$ negated to OPx drive[1] (MIN = 0.75 × B1 + 3.00)	25.70	—	21.70	—	14.40	—	12.40	—	ns
P59	IP_Xx valid to CLKOUT rising edge (MIN = 0.00 × B1 + 5.00)	5.00	—	5.00	—	5.00	—	5.00	—	ns
P60	CLKOUT rising edge to IP_Xx invalid (MIN = 0.00 × B1 + 1.00)	1.00	—	1.00	—	1.00	—	1.00	—	ns

[1] OP2 and OP3 only.

Figure 31 provides the PCMCIA output port timing for the MPC885/MPC880.

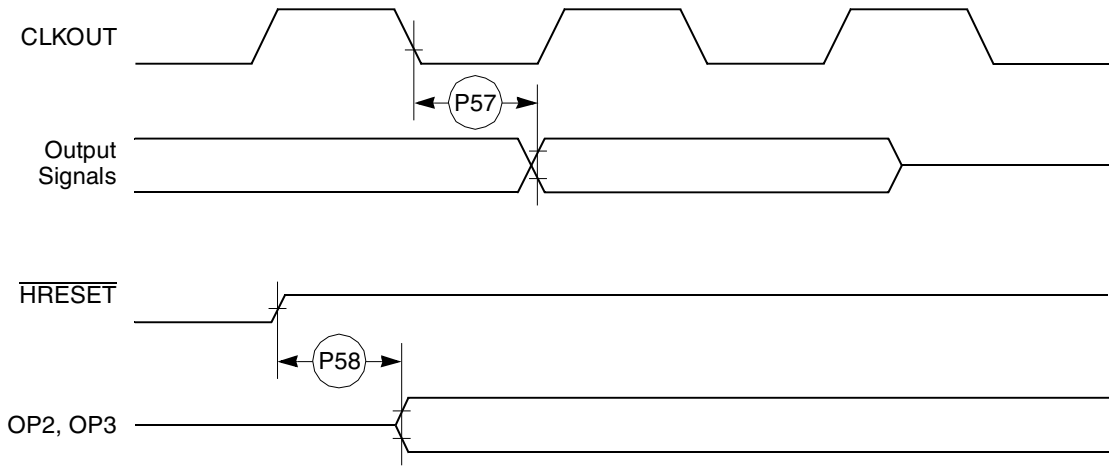

Figure 31. PCMCIA Output Port Timing

Figure 32 provides the PCMCIA input port timing for the MPC885/MPC880.

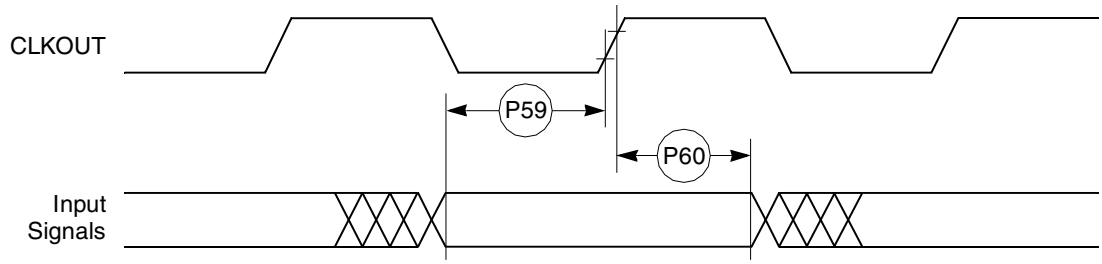

Figure 32. PCMCIA Input Port Timing

Downloaded from Arrow.com.

Table 13 shows the debug port timing for the MPC885/MPC880.

Table 13. Debug Port Timing

Num	Characteristic	All Frequencies		Unit
		Min	Max	
D61	DSCK cycle time	$3 \times T_{CLOCKOUT}$	—	—
D62	DSCK clock pulse width	$1.25 \times T_{CLOCKOUT}$	—	—
D63	DSCK rise and fall times	0.00	3.00	ns
D64	DSDI input data setup time	8.00	—	ns
D65	DSDI data hold time	5.00	—	ns
D66	DSCK low to DSDO data valid	0.00	15.00	ns
D67	DSCK low to DSDO invalid	0.00	2.00	ns

Figure 33 provides the input timing for the debug port clock.

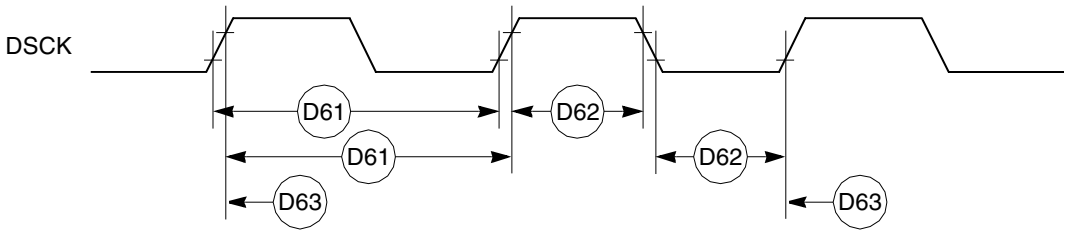

Figure 33. Debug Port Clock Input Timing

Figure 34 provides the timing for the debug port.

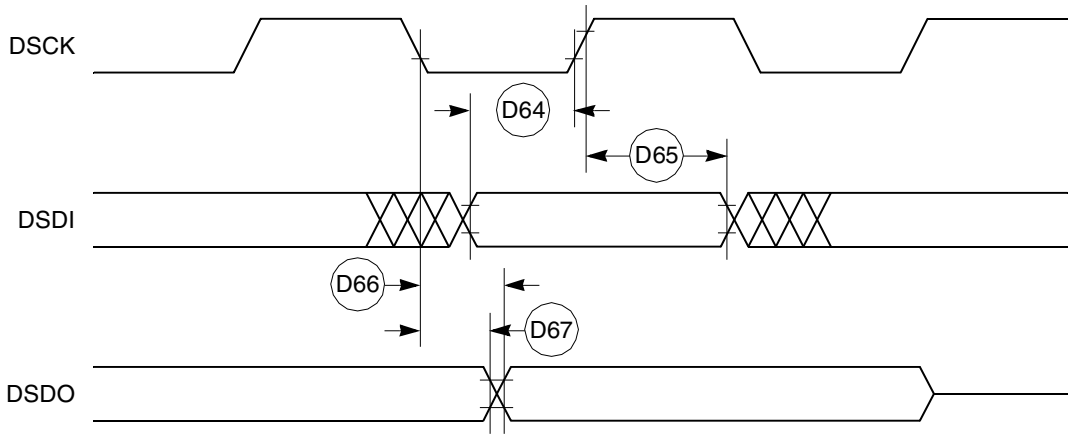

Figure 34. Debug Port Timings

Downloaded from Arrow.com.

Table 14 shows the reset timing for the MPC885/MPC880.

Table 14. Reset Timing

Num	Characteristic	33 MHz		40 MHz		66 MHz		80 MHz		Unit
		Min	Max	Min	Max	Min	Max	Min	Max	
R69	CLKOUT to $\overline{\text{HRESET}}$ high impedance (MAX = 0.00 × B1 + 20.00)	—	20.00	—	20.00	—	20.00	—	20.00	ns
R70	CLKOUT to $\overline{\text{SRESET}}$ high impedance (MAX = 0.00 × B1 + 20.00)	—	20.00	—	20.00	—	20.00	—	20.00	ns
R71	$\overline{\text{RSTCONF}}$ pulse width (MIN = 17.00 × B1)	515.20	—	425.00	—	257.60	—	212.50	—	ns
R72	—	—	—	—	—	—	—	—	—	—
R73	Configuration data to HRESET rising edge setup time (MIN = 15.00 × B1 + 50.00)	504.50	—	425.00	—	277.30	—	237.50	—	ns
R74	Configuration data to $\overline{\text{RSTCONF}}$ rising edge setup time (MIN = 0.00 × B1 + 350.00)	350.00	—	350.00	—	350.00	—	350.00	—	ns
R75	Configuration data hold time after $\overline{\text{RSTCONF}}$ negation (MIN = 0.00 × B1 + 0.00)	0.00	—	0.00	—	0.00	—	0.00	—	ns
R76	Configuration data hold time after $\overline{\text{HRESET}}$ negation (MIN = 0.00 × B1 + 0.00)	0.00	—	0.00	—	0.00	—	0.00	—	ns
R77	$\overline{\text{HRESET}}$ and $\overline{\text{RSTCONF}}$ asserted to data out drive (MAX = 0.00 × B1 + 25.00)	—	25.00	—	25.00	—	25.00	—	25.00	ns
R78	$\overline{\text{RSTCONF}}$ negated to data out high impedance (MAX = 0.00 × B1 + 25.00)	—	25.00	—	25.00	—	25.00	—	25.00	ns
R79	CLKOUT of last rising edge before chip three-states $\overline{\text{HRESET}}$ to data out high impedance (MAX = 0.00 × B1 + 25.00)	—	25.00	—	25.00	—	25.00	—	25.00	ns
R80	DSDI, DSCK setup (MIN = 3.00 × B1)	90.90	—	75.00	—	45.50	—	37.50	—	ns
R81	DSDI, DSCK hold time (MIN = 0.00 × B1 + 0.00)	0.00	—	0.00	—	0.00	—	0.00	—	ns
R82	$\overline{\text{SRESET}}$ negated to CLKOUT rising edge for DSDI and DSCK sample (MIN = 8.00 × B1)	242.40	—	200.00	—	121.20	—	100.00	—	ns

Downloaded from Arrow.com.

Figure 35 shows the reset timing for the data bus configuration.

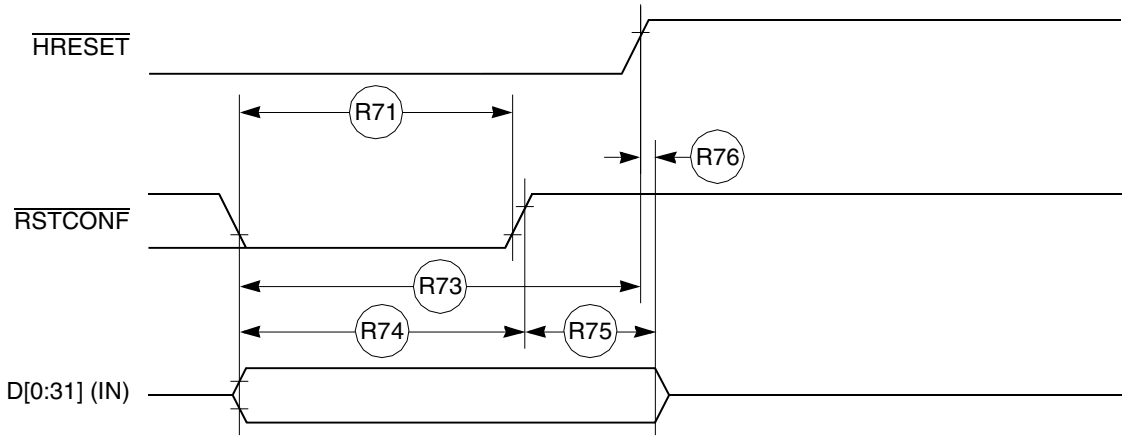

Figure 35. Reset Timing—Configuration from Data Bus

Figure 36 provides the reset timing for the data bus weak drive during configuration.

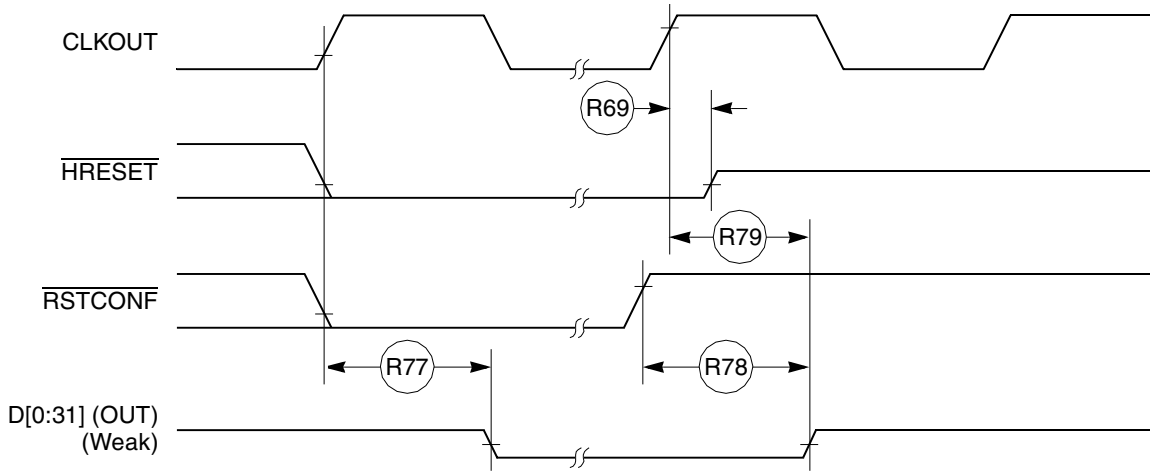

Figure 36. Reset Timing—Data Bus Weak Drive During Configuration

Figure 37 provides the reset timing for the debug port configuration.

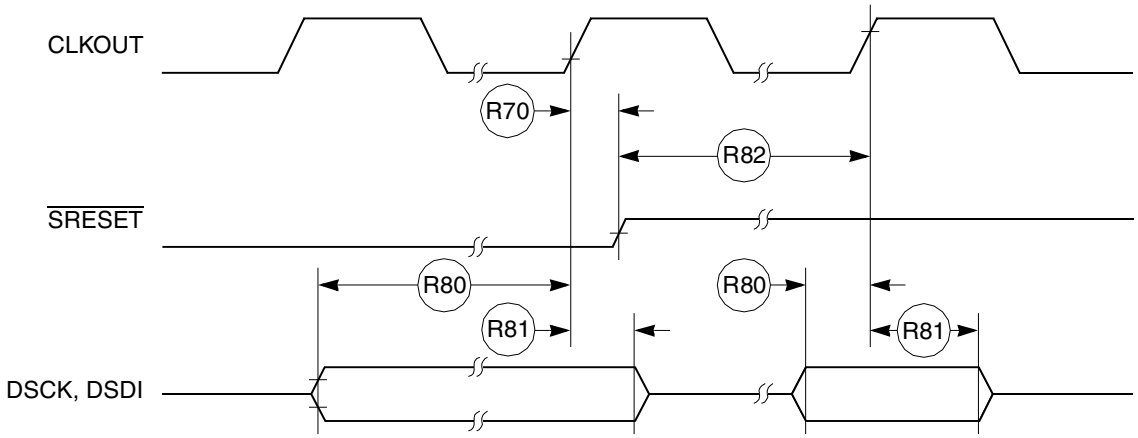

Figure 37. Reset Timing—Debug Port Configuration

Downloaded from Arrow.com.

11 IEEE 1149.1 Electrical Specifications

Table 15 provides the JTAG timings for the MPC885/MPC880 shown in Figure 38 through Figure 41.

Table 15. JTAG Timing

Num	Characteristic	All Frequencies		Unit
		Min	Max	
J82	TCK cycle time	100.00	—	ns
J83	TCK clock pulse width measured at 1.5 V	40.00	—	ns
J84	TCK rise and fall times	0.00	10.00	ns
J85	TMS, TDI data setup time	5.00	—	ns
J86	TMS, TDI data hold time	25.00	—	ns
J87	TCK low to TDO data valid	—	27.00	ns
J88	TCK low to TDO data invalid	0.00	—	ns
J89	TCK low to TDO high impedance	—	20.00	ns
J90	$\overline{\text{TRST}}$ assert time	100.00	—	ns
J91	$\overline{\text{TRST}}$ setup time to TCK low	40.00	—	ns
J92	TCK falling edge to output valid	—	50.00	ns
J93	TCK falling edge to output valid out of high impedance	—	50.00	ns
J94	TCK falling edge to output high impedance	—	50.00	ns
J95	Boundary scan input valid to TCK rising edge	50.00	—	ns
J96	TCK rising edge to boundary scan input invalid	50.00	—	ns

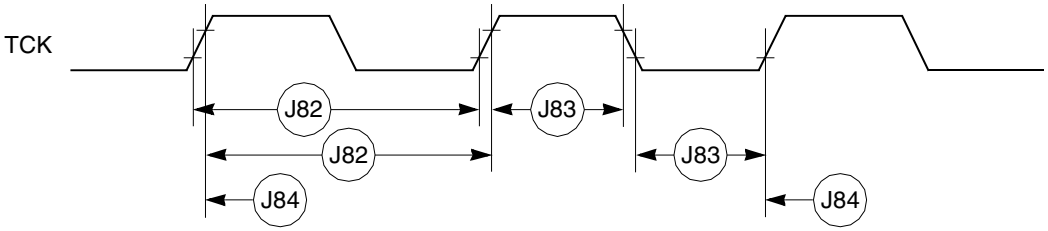

Figure 38. JTAG Test Clock Input Timing

Downloaded from Arrow.com.

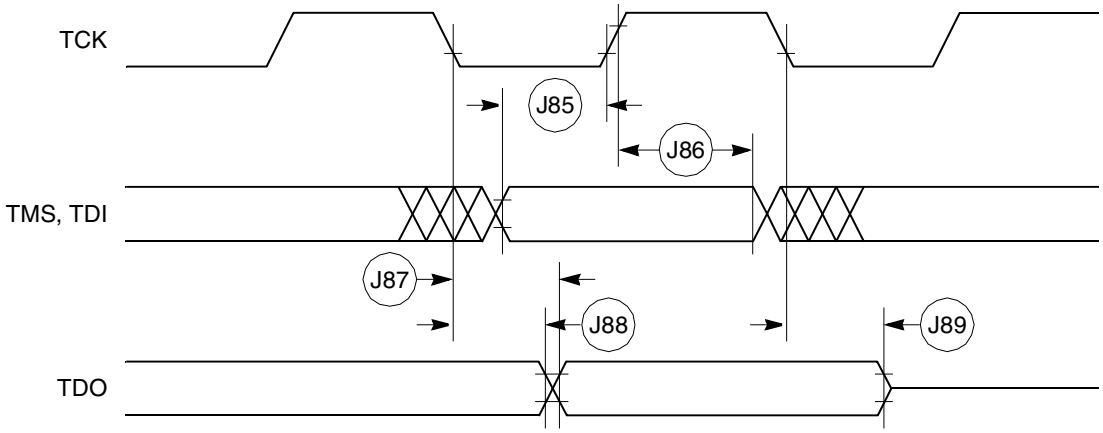

Figure 39. JTAG Test Access Port Timing Diagram

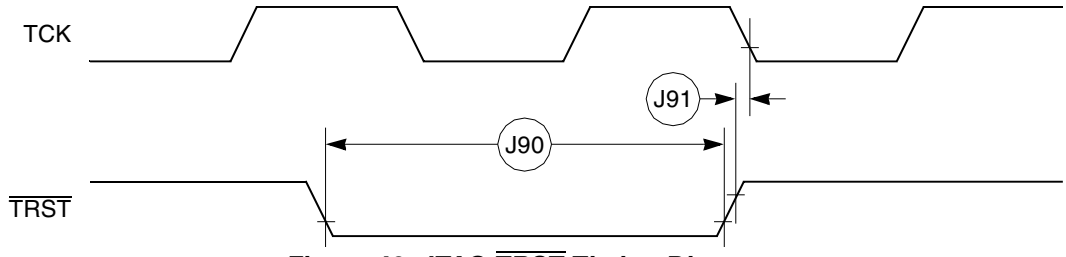

Figure 40. JTAG $\overline{\text{TRST}}$ Timing Diagram

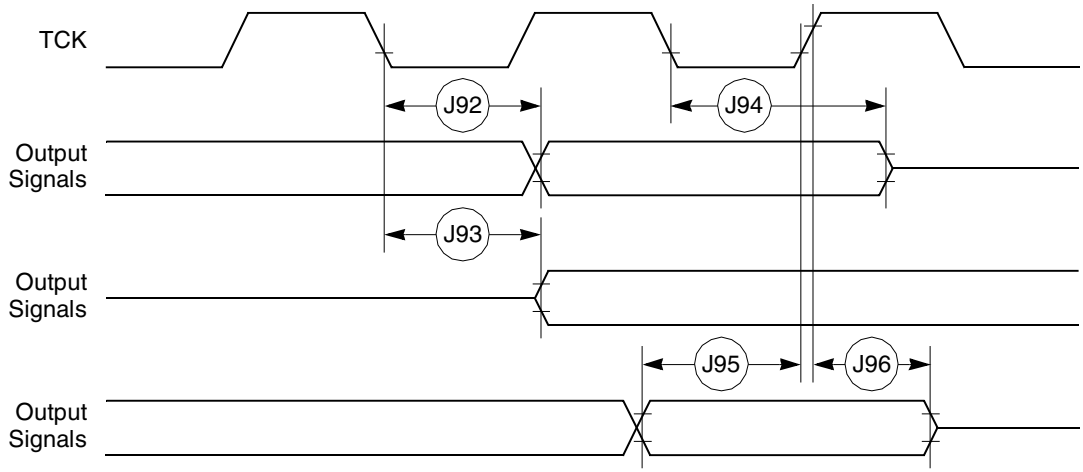

Figure 41. Boundary Scan (JTAG) Timing Diagram

Downloaded from Arrow.com.

12 CPM Electrical Characteristics

This section provides the AC and DC electrical specifications for the communications processor module (CPM) of the MPC885/MPC880.

12.1 PIP/PIO AC Electrical Specifications

Table 16 provides the PIP/PIO AC timings as shown in Figure 42 through Figure 46.

Table 16. PIP/PIO Timing

Num	Characteristic	All Frequencies		Unit
		Min	Max	
21	Data-in setup time to STBI low	0	—	ns
22	Data-In hold time to STBI high	0	—	clk
23	STBI pulse width	1.5	—	clk
24	STBO pulse width	1 clk – 5 ns	—	ns
25	Data-out setup time to STBO low	2	—	clk
26	Data-out hold time from STBO high	5	—	clk
27	STBI low to STBO low (Rx interlock)	—	4.5	clk
28	STBI low to STBO high (Tx interlock)	2	—	clk
29	Data-in setup time to clock high	15	—	ns
30	Data-in hold time from clock high	7.5	—	ns
31	Clock low to data-out valid (CPU writes data, control, or direction)	—	25	ns

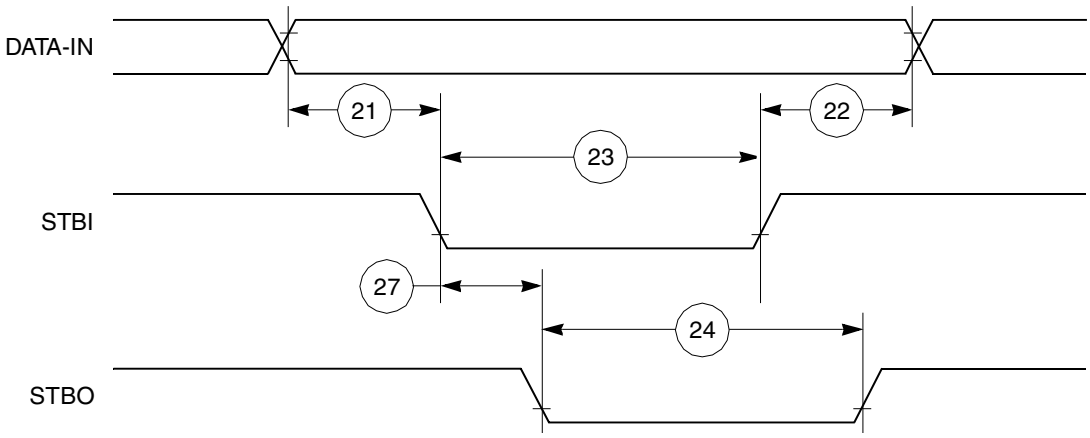

Figure 42. PIP Rx (Interlock Mode) Timing Diagram

Downloaded from Arrow.com.

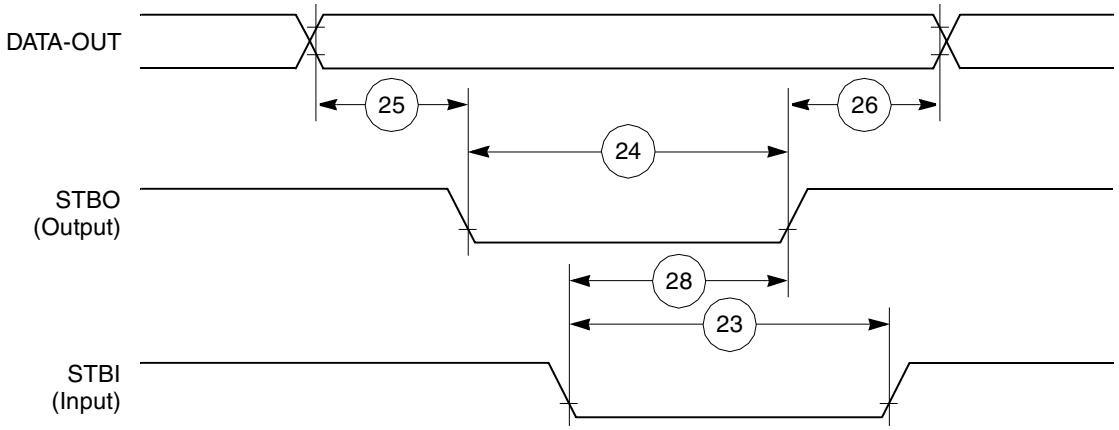

Figure 43. PIP Tx (Interlock Mode) Timing Diagram

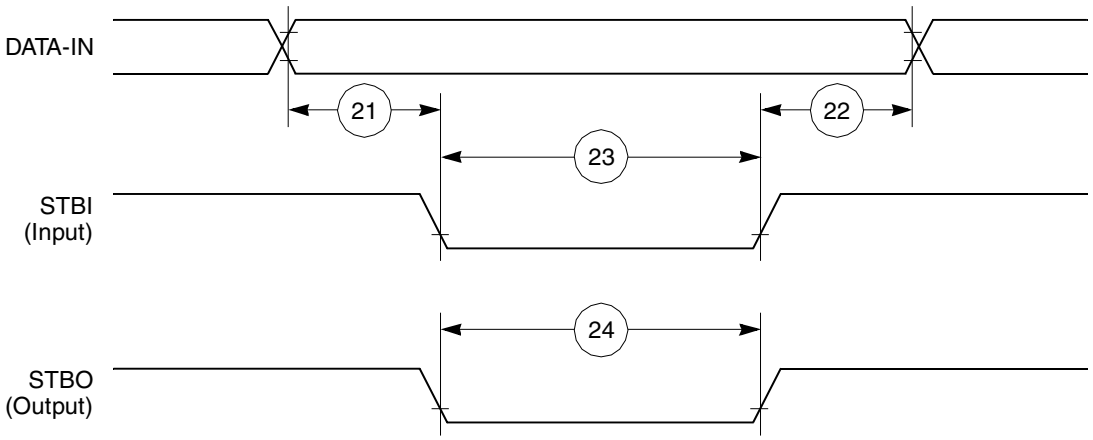

Figure 44. PIP Rx (Pulse Mode) Timing Diagram

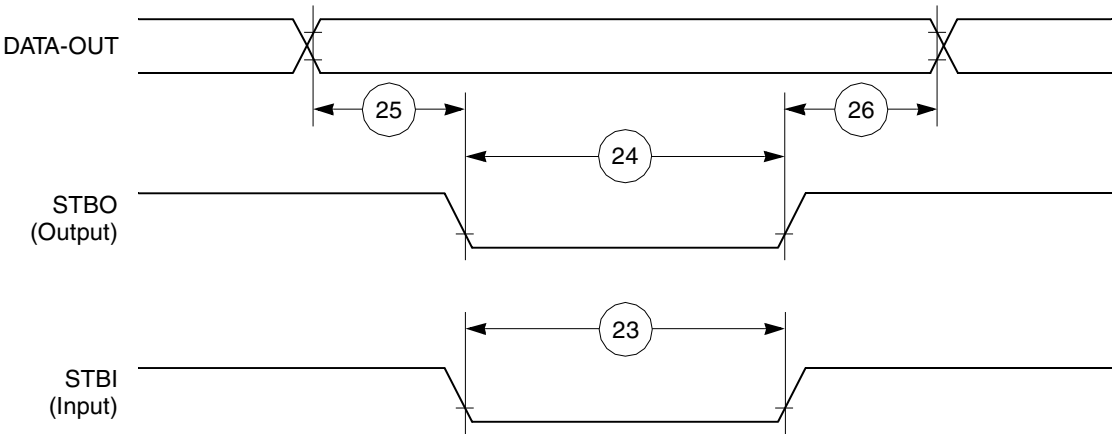

Figure 45. PIP TX (Pulse Mode) Timing Diagram

Downloaded from Arrow.com.

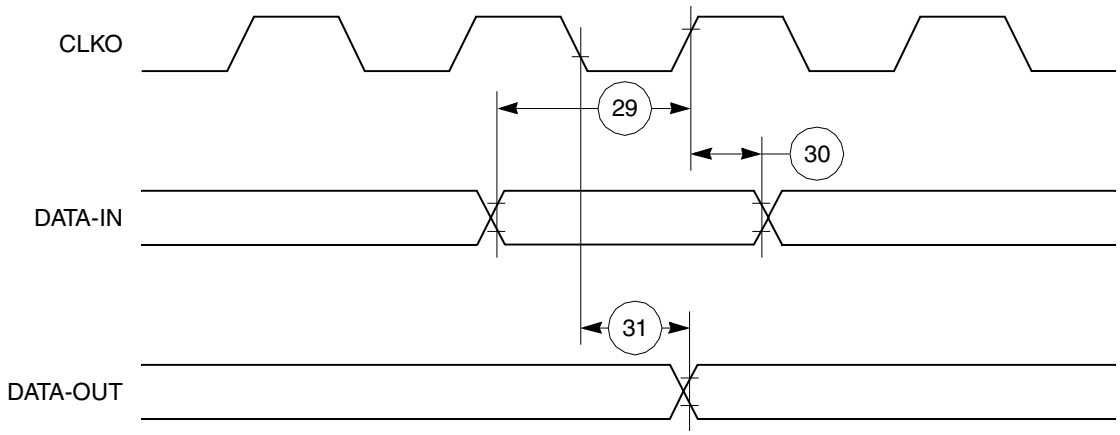

Figure 46. Parallel I/O Data-In/Data-Out Timing Diagram

12.2 Port C Interrupt AC Electrical Specifications

Table 17 provides the timings for port C interrupts.

Table 17. Port C Interrupt Timing

Num	Characteristic	33.34 MHz		Unit
		Min	Max	
35	Port C interrupt pulse width low (edge-triggered mode)	55	—	ns
36	Port C interrupt minimum time between active edges	55	—	ns

Figure 47 shows the port C interrupt detection timing.

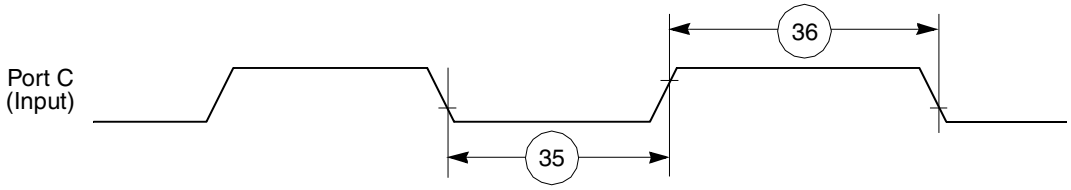

Figure 47. Port C Interrupt Detection Timing

Downloaded from Arrow.com.

12.3 IDMA Controller AC Electrical Specifications

Table 18 provides the IDMA controller timings as shown in Figure 48 tthrough Figure 51.

Table 18. IDMA Controller Timing

Num	Characteristic	All Frequencies		Unit
		Min	Max	
40	$\overline{\text{DREQ}}$ setup time to clock high	7	—	ns
41	$\overline{\text{DREQ}}$ hold time from clock high [1]	TBD	—	ns
42	$\overline{\text{SDACK}}$ assertion delay from clock high	—	12	ns
43	$\overline{\text{SDACK}}$ negation delay from clock low	—	12	ns
44	$\overline{\text{SDACK}}$ negation delay from $\overline{\text{TA}}$ low	—	20	ns
45	$\overline{\text{SDACK}}$ negation delay from clock high	—	15	ns
46	$\overline{\text{TA}}$ assertion to rising edge of the clock setup time (applies to external $\overline{\text{TA}}$)	7	—	ns

[1] Applies to high-to-low mode (EDM = 1).

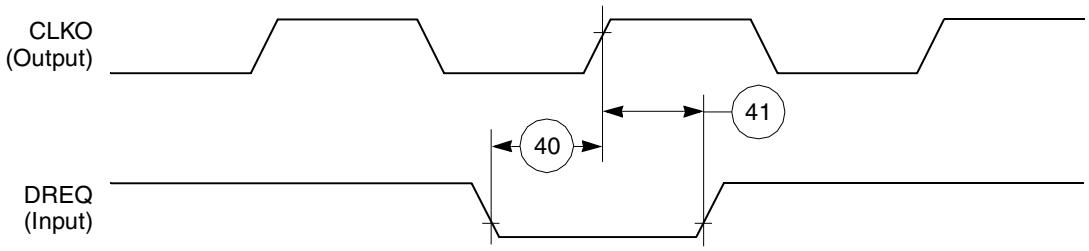

Figure 48. IDMA External Requests Timing Diagram

Downloaded from Arrow.com.

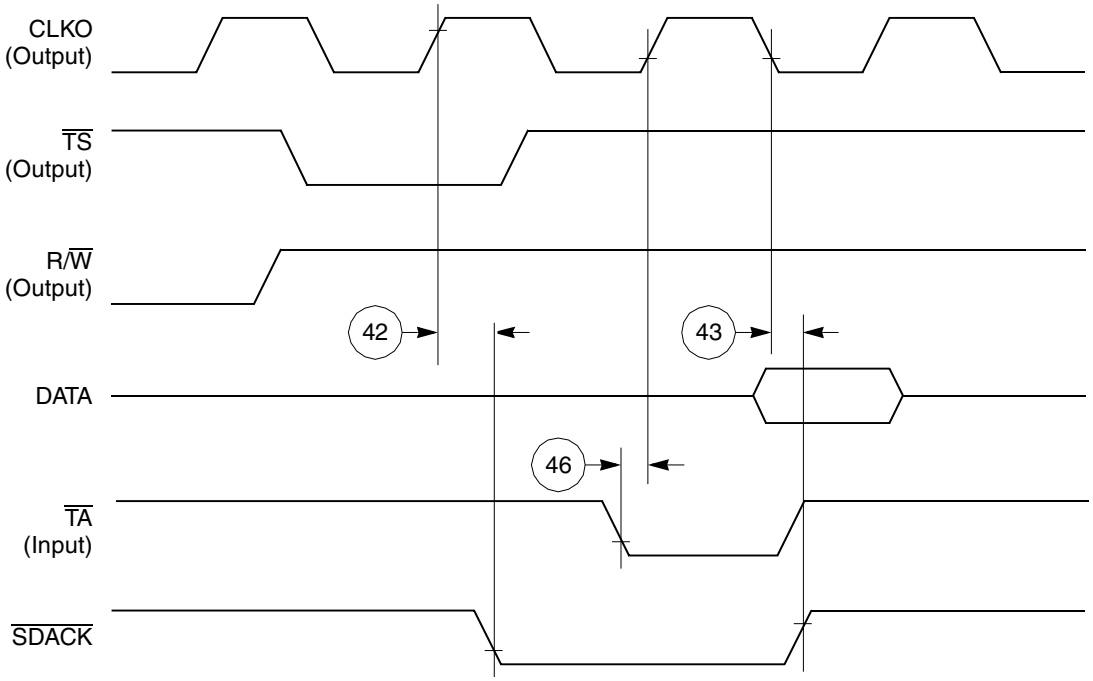

Figure 49. SDACK Timing Diagram—Peripheral Write, Externally-Generated TA

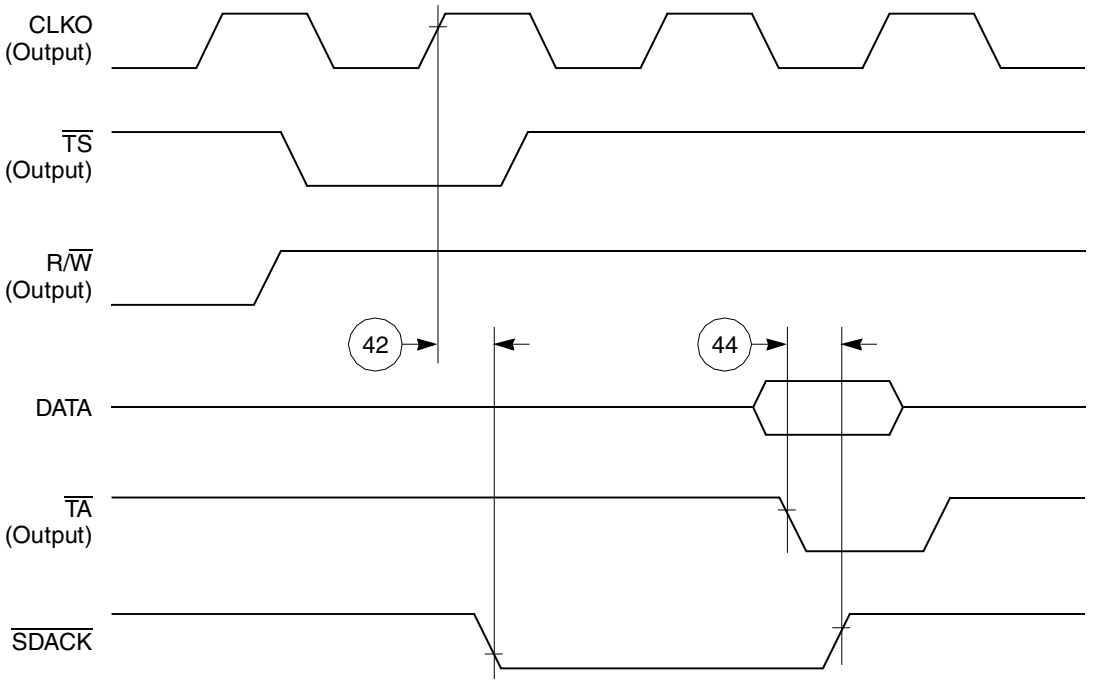

Figure 50. SDACK Timing Diagram—Peripheral Write, Internally-Generated TA

Downloaded from Arrow.com.

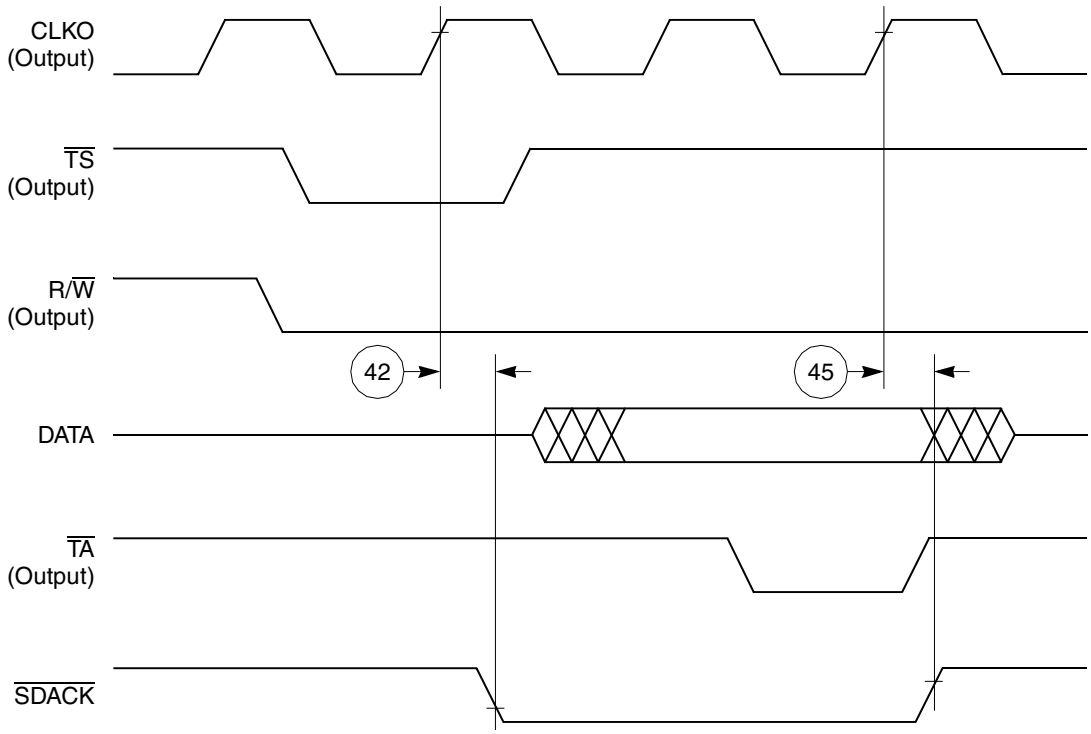

Figure 51. SDACK Timing Diagram—Peripheral Read, Internally-Generated TA

12.4 Baud Rate Generator AC Electrical Specifications

Table 19 provides the baud rate generator timings as shown in Figure 52.

Table 19. Baud Rate Generator Timing

Num	Characteristic	All Frequencies		Unit
		Min	Max	
50	BRGO rise and fall time	—	10	ns
51	BRGO duty cycle	40	60	%
52	BRGO cycle	40	—	ns

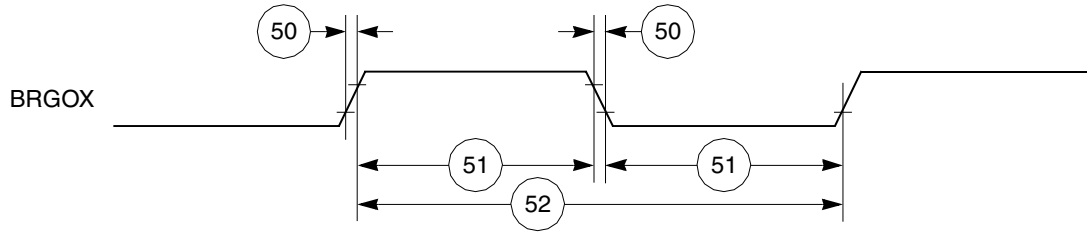

Figure 52. Baud Rate Generator Timing Diagram

Downloaded from Arrow.com.

12.5 Timer AC Electrical Specifications

Table 20 provides the general-purpose timer timings as shown in Figure 53.

Table 20. Timer Timing

Num	Characteristic	All Frequencies		Unit
		Min	Max	
61	TIN/$\overline{\text{TGATE}}$ rise and fall time	10	—	ns
62	TIN/$\overline{\text{TGATE}}$ low time	1	—	clk
63	TIN/$\overline{\text{TGATE}}$ high time	2	—	clk
64	TIN/$\overline{\text{TGATE}}$ cycle time	3	—	clk
65	CLKO low to $\overline{\text{TOUT}}$ valid	3	25	ns

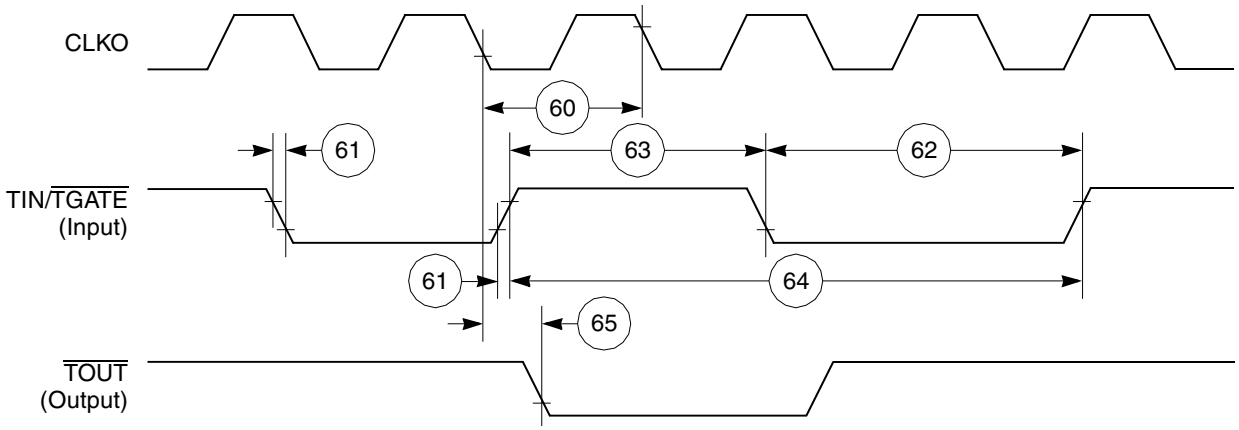

Figure 53. CPM General-Purpose Timers Timing Diagram

12.6 Serial Interface AC Electrical Specifications

Table 21 provides the serial interface timings as shown in Figure 54 through Figure 58.

Table 21. SI Timing

Num	Characteristic	All Frequencies		Unit
		Min	Max	
70	L1RCLK, L1TCLK frequency (DSC = 0)[1, 2]	—	SYNCCLK/2.5	MHz
71	L1RCLK, L1TCLK width low (DSC = 0)[2]	P + 10	—	ns
71a	L1RCLK, L1TCLK width high (DSC = 0)[3]	P + 10	—	ns
72	L1TXD, L1ST(1–4), $\overline{\text{L1RQ}}$, L1CLKO rise/fall time	—	15.00	ns
73	L1RSYNC, L1TSYNC valid to L1CLK edge (SYNC setup time)	20.00	—	ns
74	L1CLK edge to L1RSYNC, L1TSYNC, invalid (SYNC hold time)	35.00	—	ns
75	L1RSYNC, L1TSYNC rise/fall time	—	15.00	ns

Downloaded from Arrow.com.

Table 21. SI Timing (continued)

Num	Characteristic	All Frequencies		Unit
		Min	Max	
76	L1RXD valid to L1CLK edge (L1RXD setup time)	17.00	—	ns
77	L1CLK edge to L1RXD invalid (L1RXD hold time)	13.00	—	ns
78	L1CLK edge to L1ST(1–4) valid[4]	10.00	45.00	ns
78A	L1SYNC valid to L1ST(1–4) valid	10.00	45.00	ns
79	L1CLK edge to L1ST(1–4) invalid	10.00	45.00	ns
80	L1CLK edge to L1TXD valid	10.00	55.00	ns
80A	L1TSYNC valid to L1TXD valid[4]	10.00	55.00	ns
81	L1CLK edge to L1TXD high impedance	0.00	42.00	ns
82	L1RCLK, L1TCLK frequency (DSC =1)	—	16.00 or SYNCCLK/2	MHz
83	L1RCLK, L1TCLK width low (DSC =1)	P + 10	—	ns
83a	L1RCLK, L1TCLK width high (DSC = 1)[3]	P + 10	—	ns
84	L1CLK edge to L1CLKO valid (DSC = 1)	—	30.00	ns
85	$\overline{\text{L1RQ}}$ valid before falling edge of L1TSYNC[4]	1.00	—	L1TCLK
86	L1GR setup time[2]	42.00	—	ns
87	L1GR hold time	42.00	—	ns
88	L1CLK edge to L1SYNC valid (FSD = 00) CNT = 0000, BYT = 0, DSC = 0)	—	0.00	ns

1 The ratio SyncCLK/L1RCLK must be greater than 2.5/1.
2 These specs are valid for IDL mode only.
3 Where P = 1/CLKOUT. Thus for a 25-MHz CLKO1 rate, P = 40 ns.
4 These strobes and TxD on the first bit of the frame become valid after L1CLK edge or L1SYNC, whichever comes later.

Downloaded from Arrow.com.

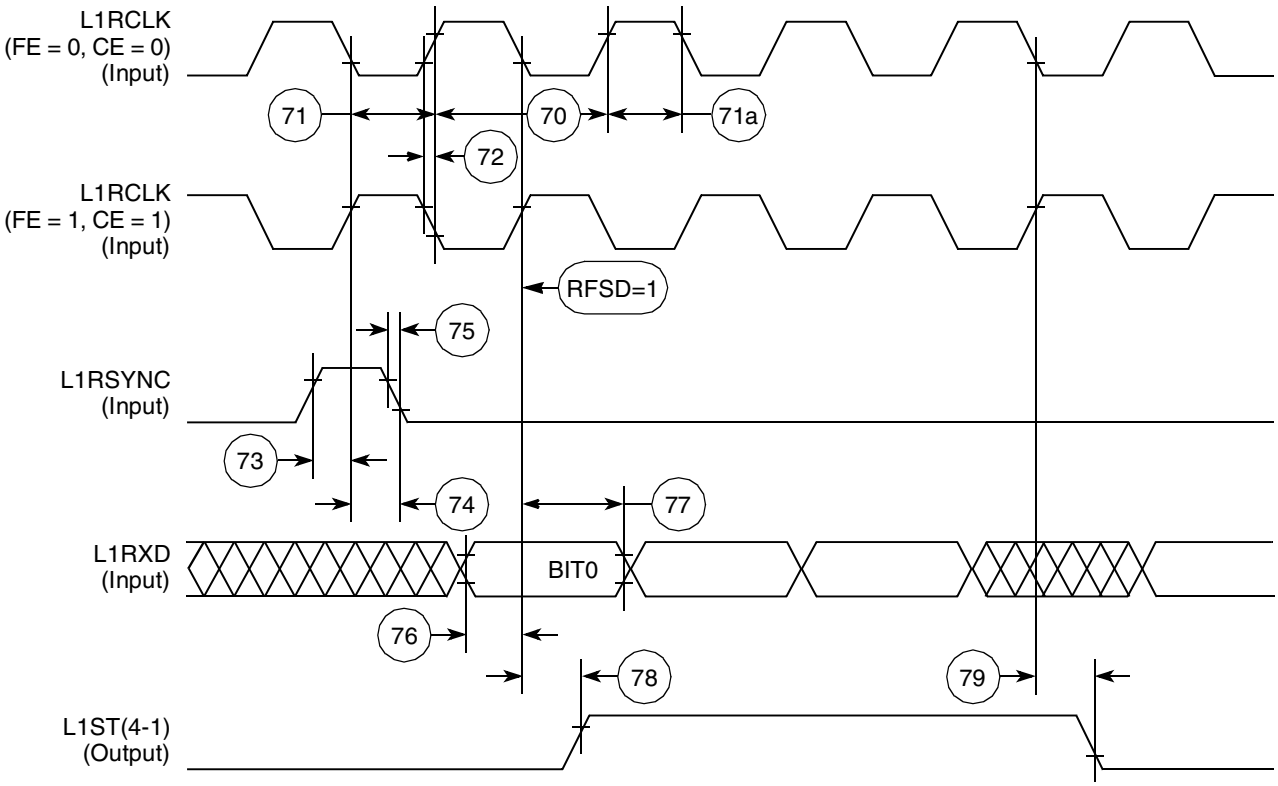

Figure 54. SI Receive Timing Diagram with Normal Clocking (DSC = 0)

Downloaded from Arrow.com.

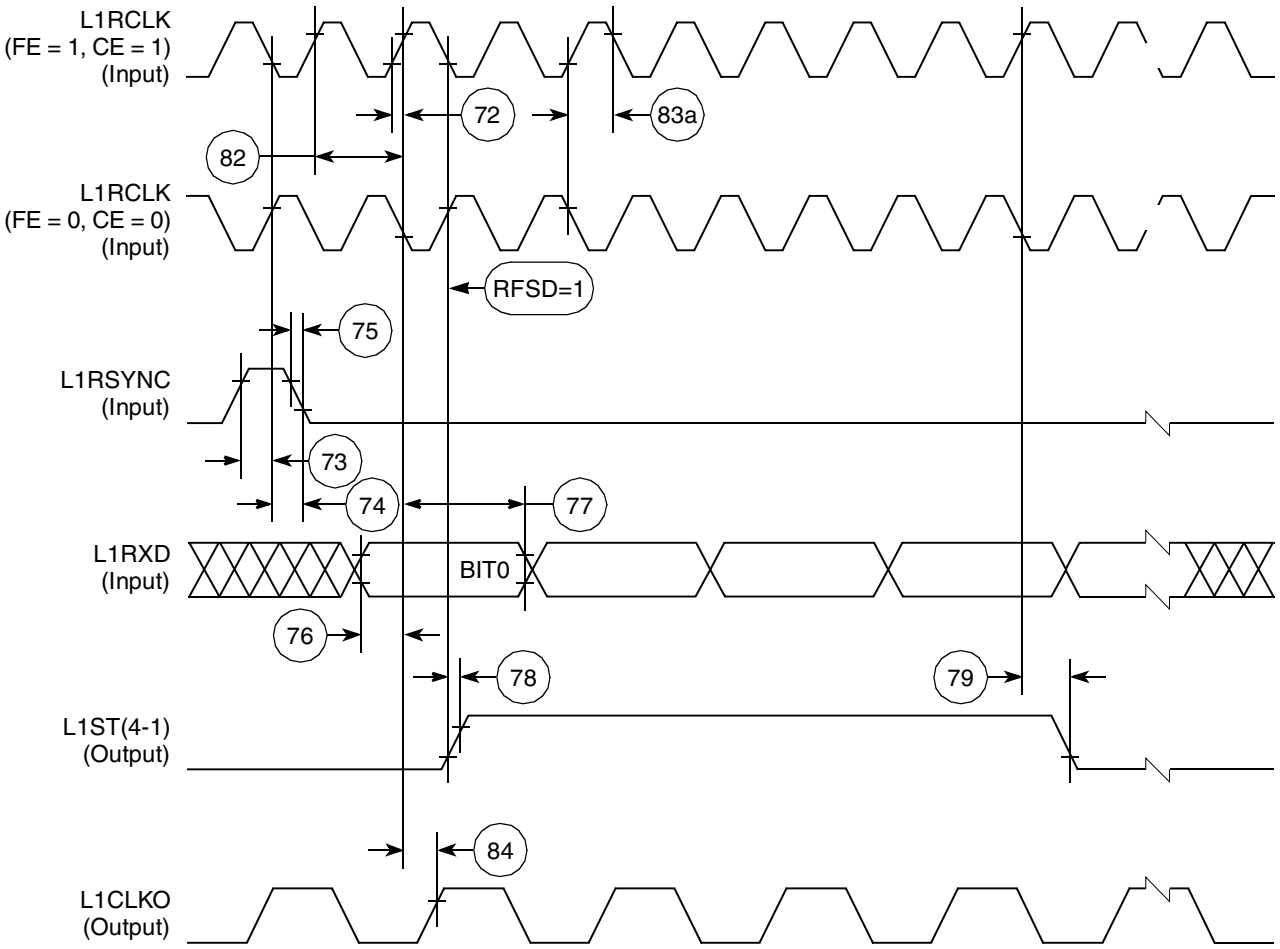

Figure 55. SI Receive Timing with Double-Speed Clocking (DSC = 1)

Downloaded from Arrow.com.

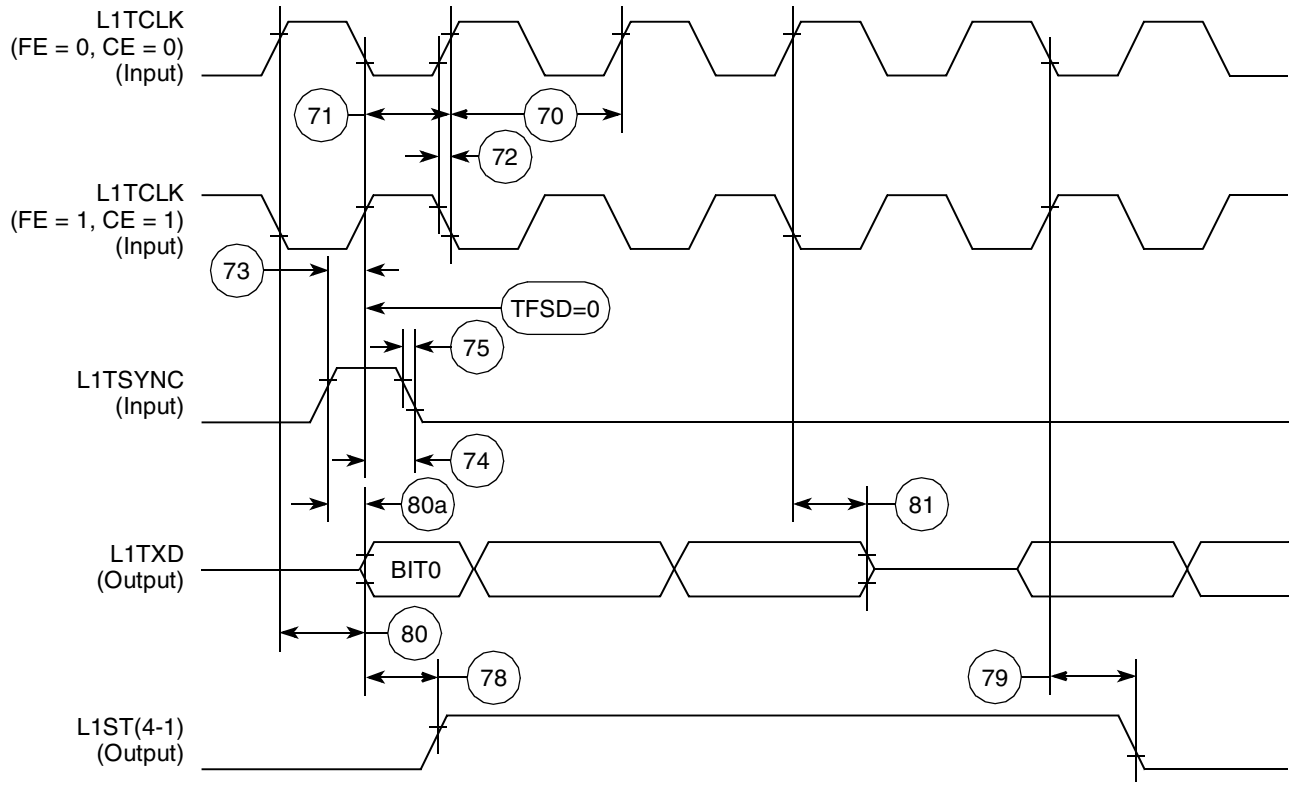

Figure 56. SI Transmit Timing Diagram (DSC = 0)

Downloaded from Arrow.com.

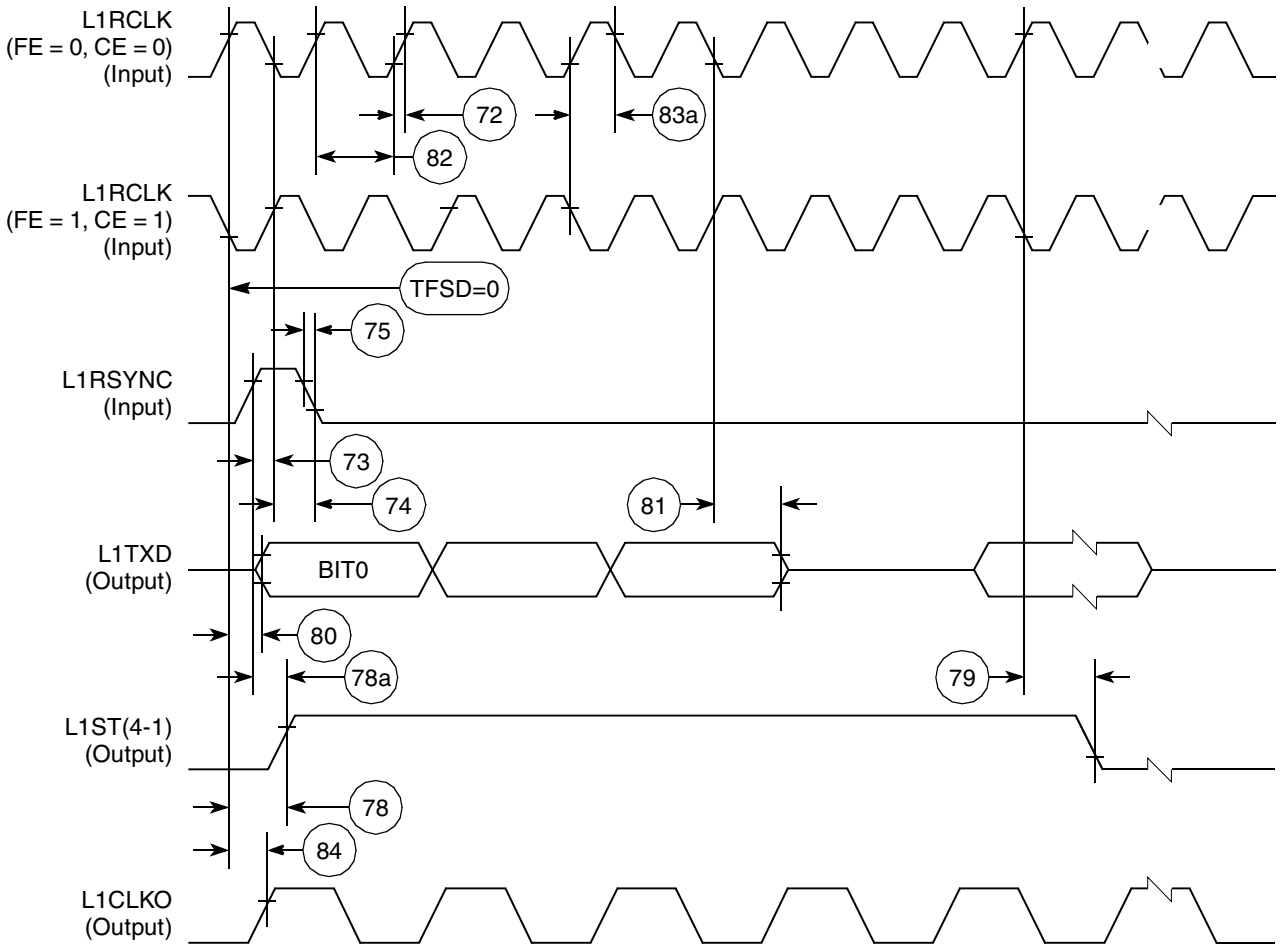

Figure 57. SI Transmit Timing with Double Speed Clocking (DSC = 1)

Downloaded from Arrow.com.

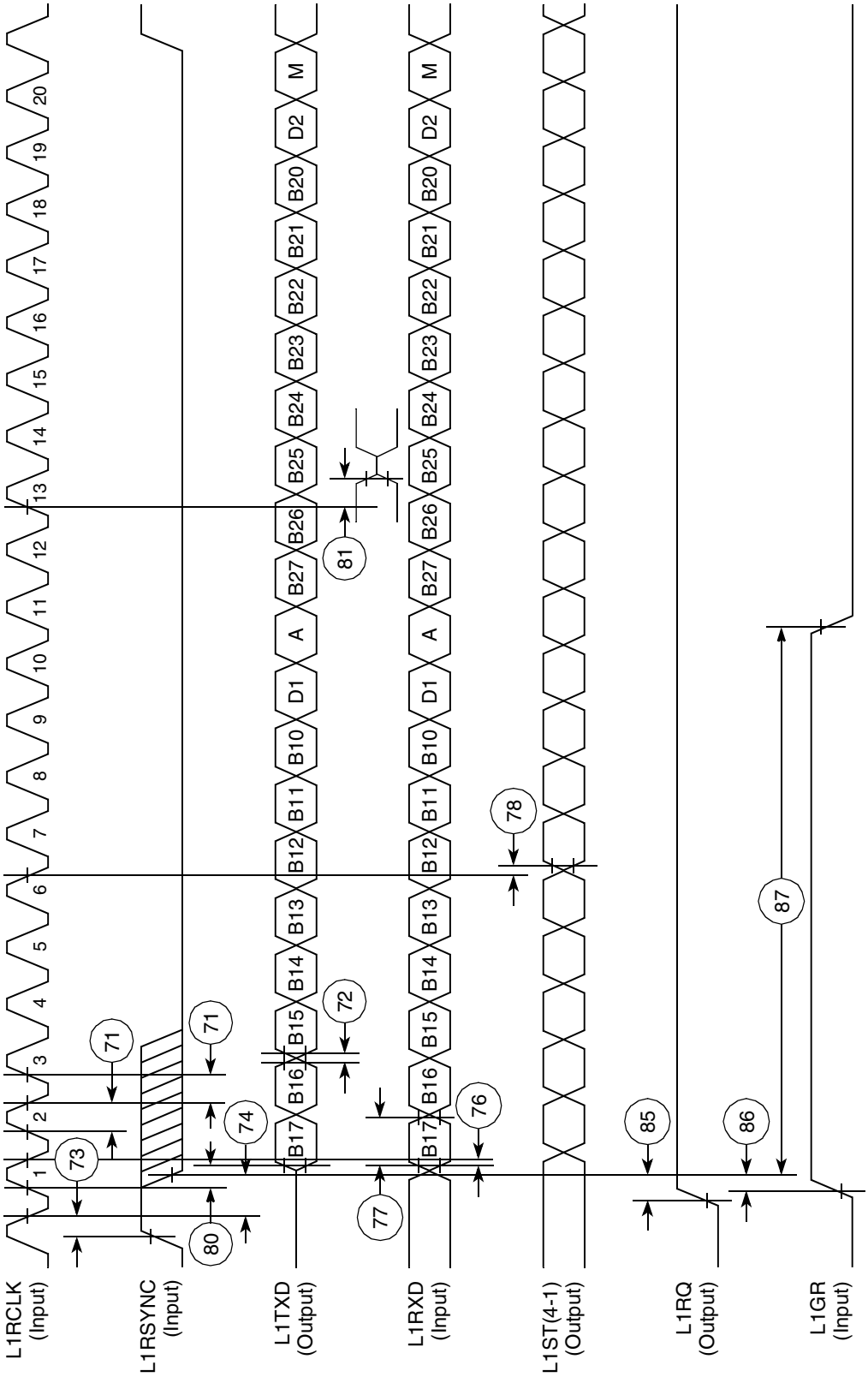

Figure 58. IDL Timing

Downloaded from Arrow.com.

12.7 SCC in NMSI Mode Electrical Specifications

Table 22 provides the NMSI external clock timing.

Table 22. NMSI External Clock Timing

Num	Characteristic	All Frequencies		Unit
		Min	Max	
100	RCLK1 and TCLK1 width high[1]	1/SYNCCLK	—	ns
101	RCLK1 and TCLK1 width low	1/SYNCCLK + 5	—	ns
102	RCLK1 and TCLK1 rise/fall time	—	15.00	ns
103	TXD1 active delay (from TCLK1 falling edge)	0.00	50.00	ns
104	$\overline{\text{RTS1}}$ active/inactive delay (from TCLK1 falling edge)	0.00	50.00	ns
105	$\overline{\text{CTS1}}$ setup time to TCLK1 rising edge	5.00	—	ns
106	RXD1 setup time to RCLK1 rising edge	5.00	—	ns
107	RXD1 hold time from RCLK1 rising edge[2]	5.00	—	ns
108	$\overline{\text{CD1}}$ setup time to RCLK1 rising edge	5.00	—	ns

1 The ratios SyncCLK/RCLK1 and SyncCLK/TCLK1 must be greater than or equal to 2.25/1.
2 Also applies to $\overline{\text{CD}}$ and $\overline{\text{CTS}}$ hold time when they are used as external sync signals.

Table 23 provides the NMSI internal clock timing.

Table 23. NMSI Internal Clock Timing

Num	Characteristic	All Frequencies		Unit
		Min	Max	
100	RCLK1 and TCLK1 frequency[1]	0.00	SYNCCLK/3	MHz
102	RCLK1 and TCLK1 rise/fall time	—	—	ns
103	TXD1 active delay (from TCLK1 falling edge)	0.00	30.00	ns
104	$\overline{\text{RTS1}}$ active/inactive delay (from TCLK1 falling edge)	0.00	30.00	ns
105	$\overline{\text{CTS1}}$ setup time to TCLK1 rising edge	40.00	—	ns
106	RXD1 setup time to RCLK1 rising edge	40.00	—	ns
107	RXD1 hold time from RCLK1 rising edge[2]	0.00	—	ns
108	$\overline{\text{CD1}}$ setup time to RCLK1 rising edge	40.00	—	ns

1 The ratios SyncCLK/RCLK1 and SyncCLK/TCLK1 must be greater than or equal to 3/1.
2 Also applies to $\overline{\text{CD}}$ and $\overline{\text{CTS}}$ hold time when they are used as external sync signals

Downloaded from Arrow.com.

Figure 59 through Figure 61 show the NMSI timings.

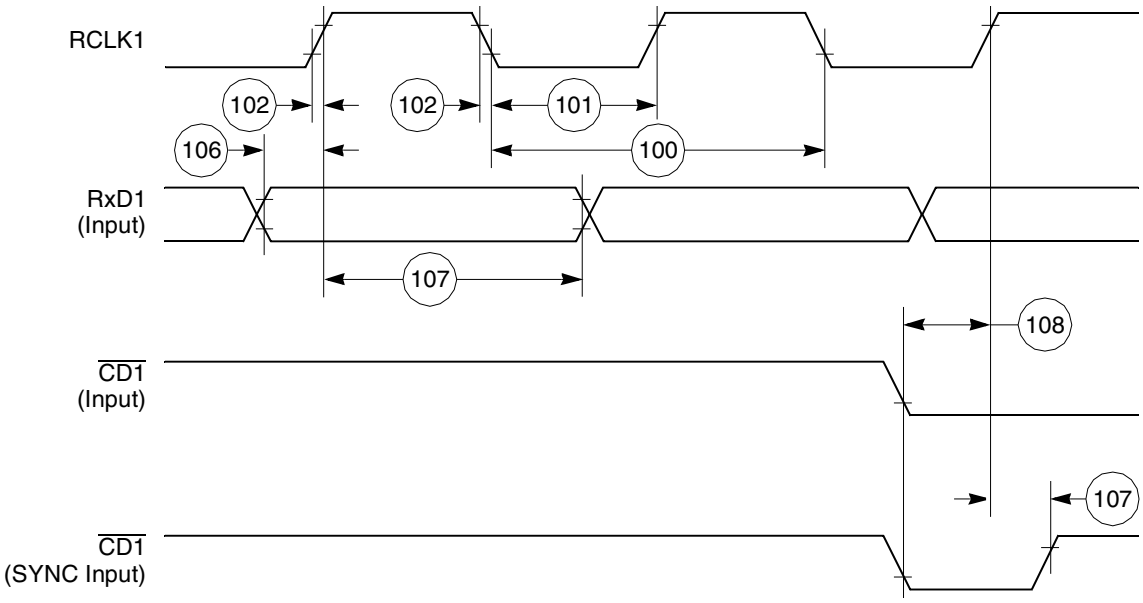

Figure 59. SCC NMSI Receive Timing Diagram

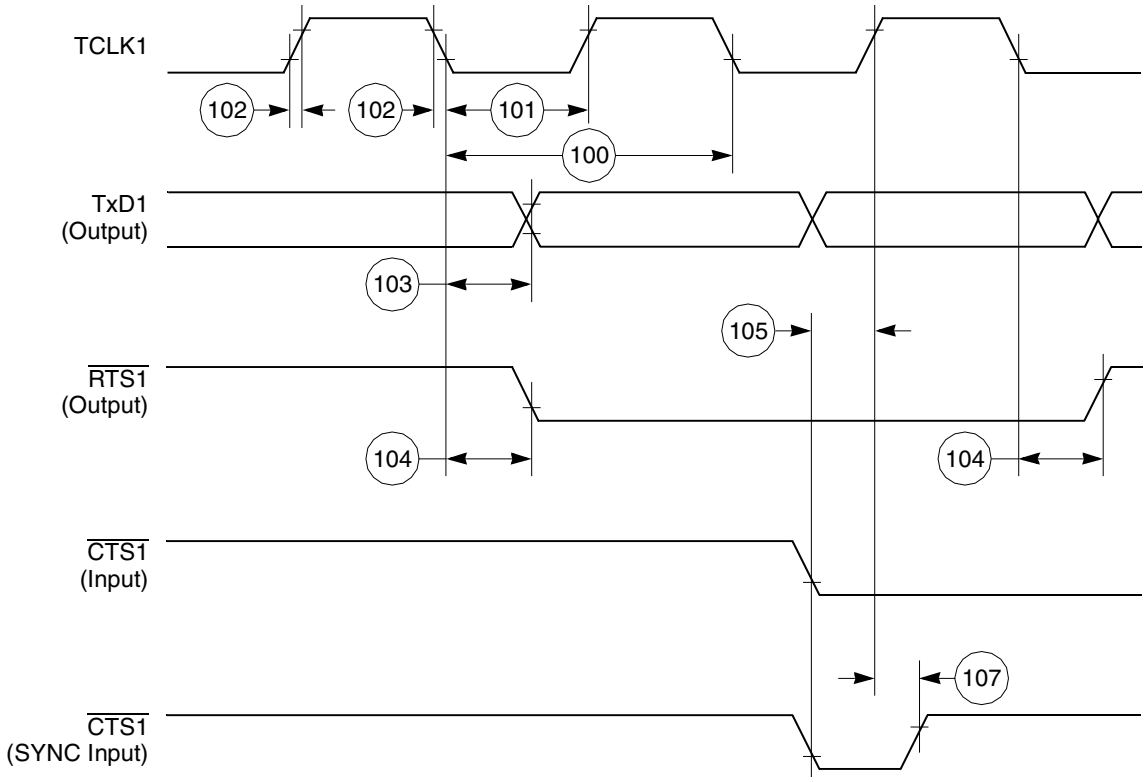

Figure 60. SCC NMSI Transmit Timing Diagram

Downloaded from Arrow.com.

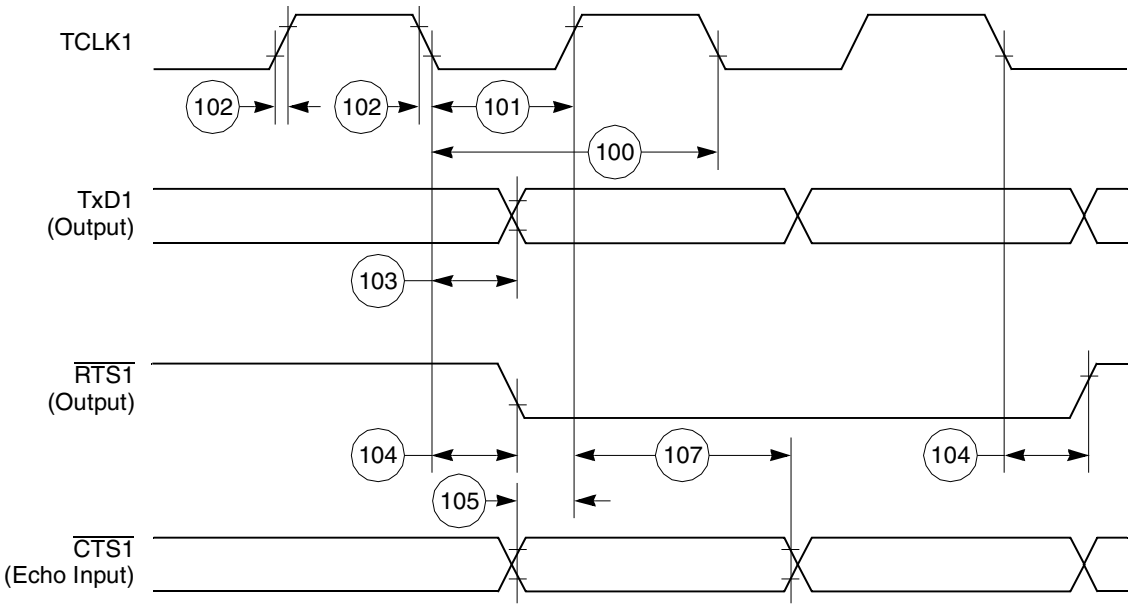

Figure 61. HDLC Bus Timing Diagram

12.8 Ethernet Electrical Specifications

Table 24 provides the Ethernet timings as shown in Figure 62 through Figure 64.

Table 24. Ethernet Timing

Num	Characteristic	All Frequencies		Unit
		Min	Max	
120	CLSN width high	40	—	ns
121	RCLK1 rise/fall time	—	15	ns
122	RCLK1 width low	40	—	ns
123	RCLK1 clock period[1]	80	120	ns
124	RXD1 setup time	20	—	ns
125	RXD1 hold time	5	—	ns
126	RENA active delay (from RCLK1 rising edge of the last data bit)	10	—	ns
127	RENA width low	100	—	ns
128	TCLK1 rise/fall time	—	15	ns
129	TCLK1 width low	40	—	ns
130	TCLK1 clock period[1]	99	101	ns
131	TXD1 active delay (from TCLK1 rising edge)	—	50	ns
132	TXD1 inactive delay (from TCLK1 rising edge)	6.5	50	ns
133	TENA active delay (from TCLK1 rising edge)	10	50	ns

Downloaded from Arrow.com.

Table 24. Ethernet Timing (continued)

Num	Characteristic	All Frequencies		Unit
		Min	Max	
134	TENA inactive delay (from TCLK1 rising edge)	10	50	ns
138	CLKO1 low to $\overline{\text{SDACK}}$ asserted[2]	—	20	ns
139	CLKO1 low to $\overline{\text{SDACK}}$ negated [2]	—	20	ns

[1] The ratios SyncCLK/RCLK1 and SyncCLK/TCLK1 must be greater than or equal to 2/1.
[2] $\overline{\text{SDACK}}$ is asserted whenever the SDMA writes the incoming frame DA into memory.

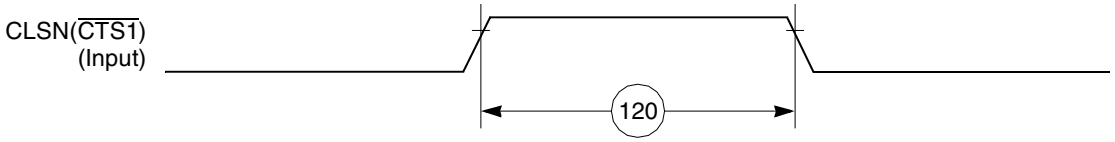

Figure 62. Ethernet Collision Timing Diagram

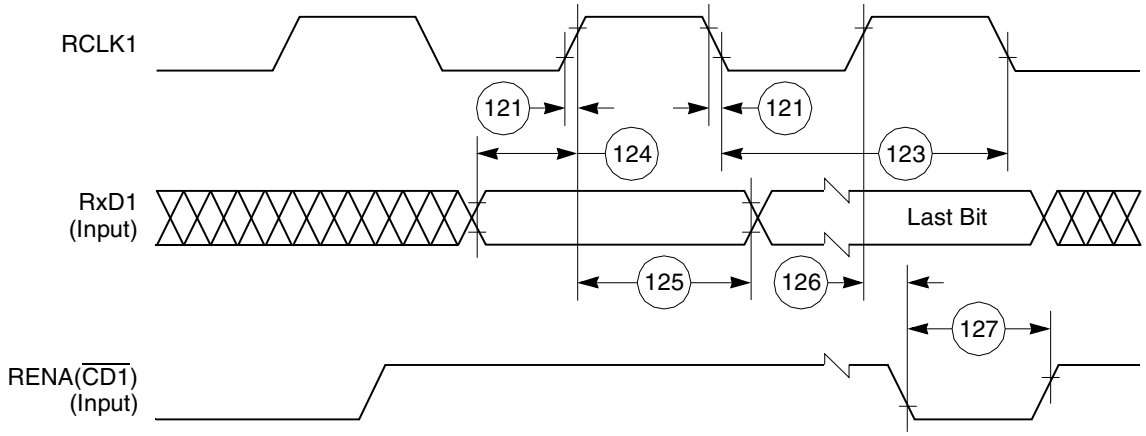

Figure 63. Ethernet Receive Timing Diagram

Downloaded from Arrow.com.

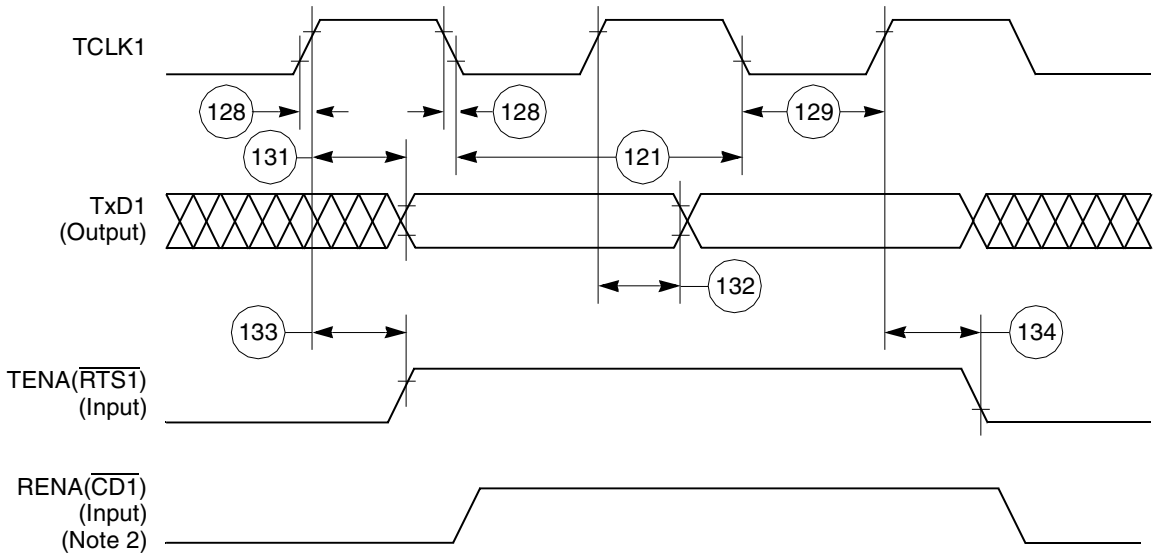

Notes:

1. Transmit clock invert (TCI) bit in GSMR is set.
2. If RENA is negated before TENA or RENA is not asserted at all during transmit, then the CSL bit is set in the buffer descriptor at the end of the frame transmission.

Figure 64. Ethernet Transmit Timing Diagram

12.9 SMC Transparent AC Electrical Specifications

Table 25 provides the SMC transparent timings as shown in Figure 65.

Table 25. SMC Transparent Timing

Num	Characteristic	All Frequencies		Unit
		Min	Max	
150	SMCLK clock period[1]	100	—	ns
151	SMCLK width low	50	—	ns
151A	SMCLK width high	50	—	ns
152	SMCLK rise/fall time	—	15	ns
153	SMTXD active delay (from SMCLK falling edge)	10	50	ns
154	SMRXD/SMSYNC setup time	20	—	ns
155	RXD1/SMSYNC hold time	5	—	ns

[1] SyncCLK must be at least twice as fast as SMCLK.

Downloaded from Arrow.com.

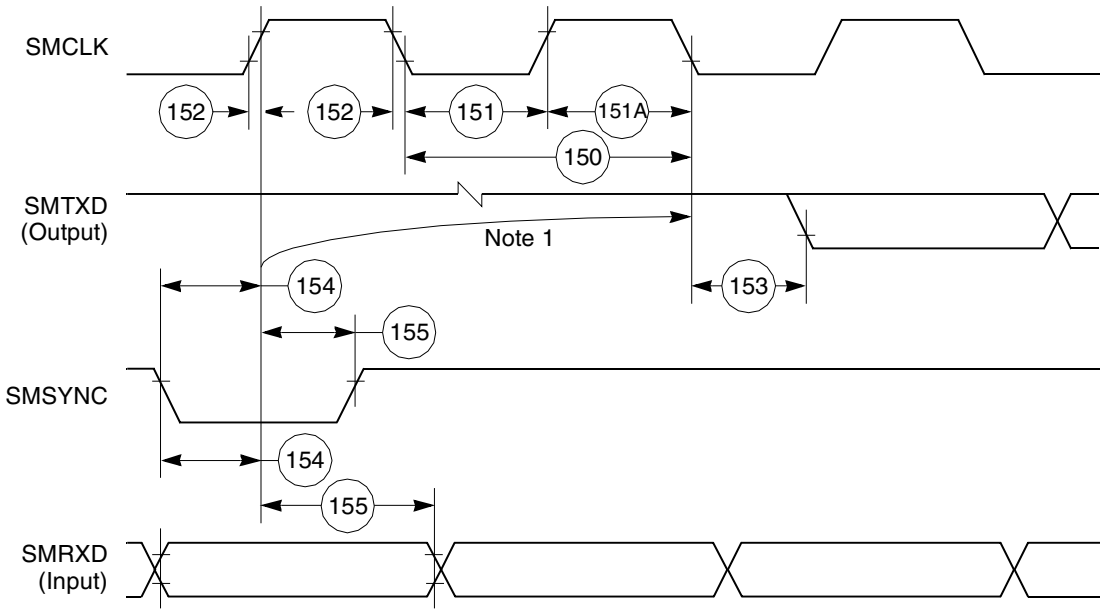

Note:
1. This delay is equal to an integer number of character-length clocks.

Figure 65. SMC Transparent Timing Diagram

12.10 SPI Master AC Electrical Specifications

Table 26 provides the SPI master timings as shown in Figure 66 and Figure 67.

Table 26. SPI Master Timing

Num	Characteristic	All Frequencies		Unit
		Min	Max	
160	MASTER cycle time	4	1024	t_{cyc}
161	MASTER clock (SCK) high or low time	2	512	t_{cyc}
162	MASTER data setup time (inputs)	15	—	ns
163	Master data hold time (inputs)	0	—	ns
164	Master data valid (after SCK edge)	—	10	ns
165	Master data hold time (outputs)	0	—	ns
166	Rise time output	—	15	ns
167	Fall time output	—	15	ns

Downloaded from Arrow.com.

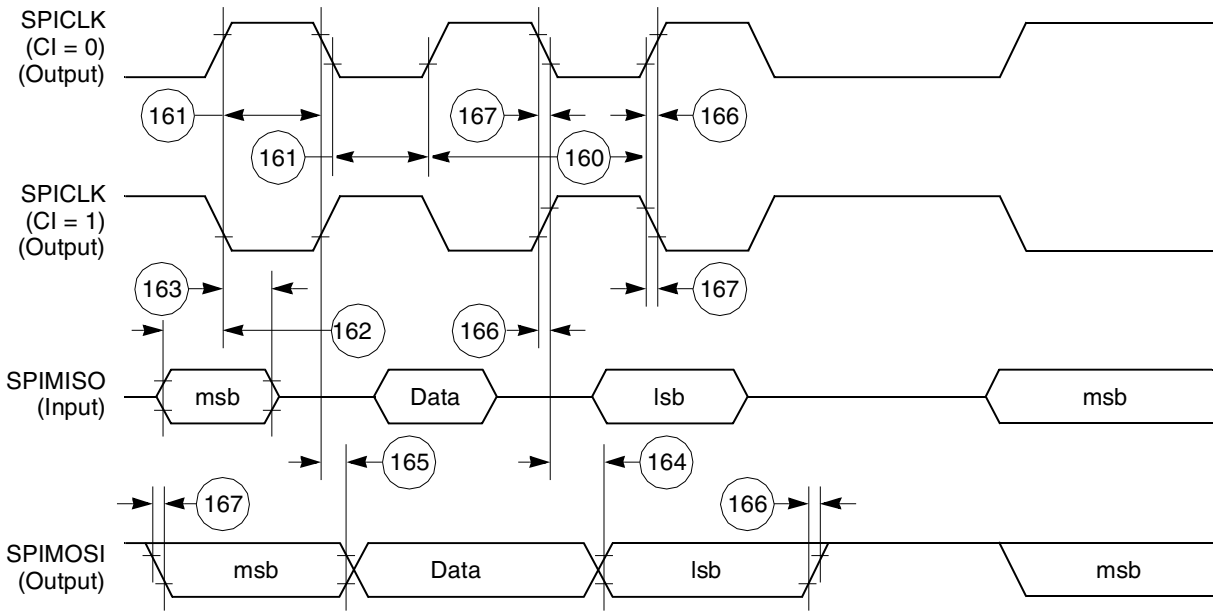

Figure 66. SPI Master (CP = 0) Timing Diagram

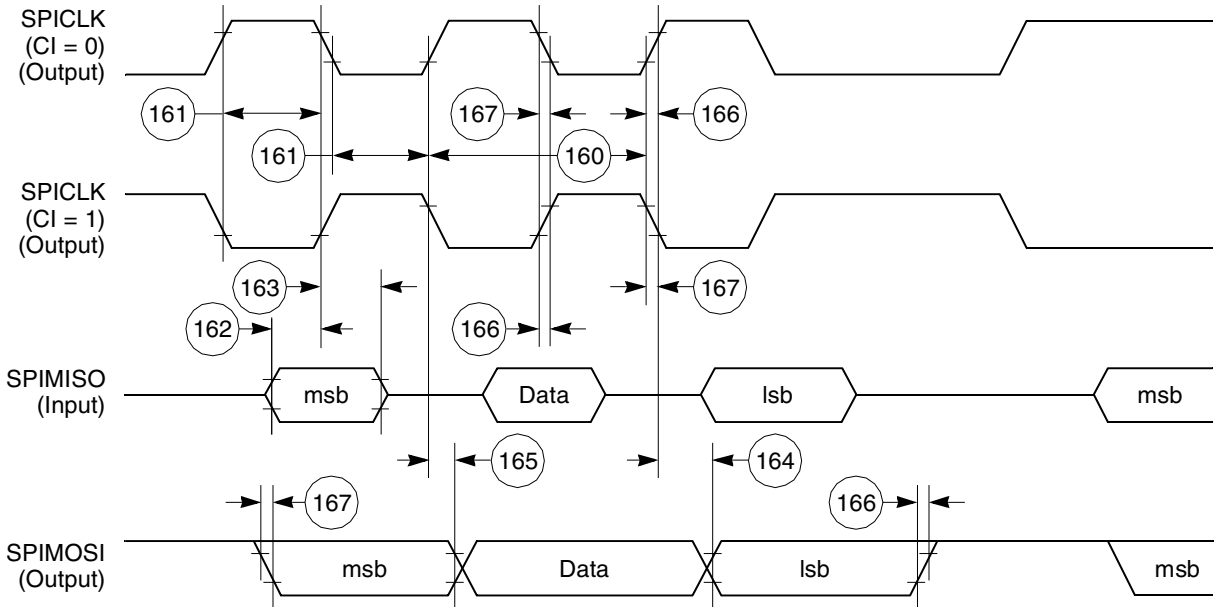

Figure 67. SPI Master (CP = 1) Timing Diagram

Downloaded from Arrow.com.

12.11 SPI Slave AC Electrical Specifications

Table 27 provides the SPI slave timings as shown in Figure 68 and Figure 69.

Table 27. SPI Slave Timing

Num	Characteristic	All Frequencies		Unit
		Min	Max	
170	Slave cycle time	2	—	t_{cyc}
171	Slave enable lead time	15	—	ns
172	Slave enable lag time	15	—	ns
173	Slave clock (SPICLK) high or low time	1	—	t_{cyc}
174	Slave sequential transfer delay (does not require deselect)	1	—	t_{cyc}
175	Slave data setup time (inputs)	20	—	ns
176	Slave data hold time (inputs)	20	—	ns
177	Slave access time	—	50	ns

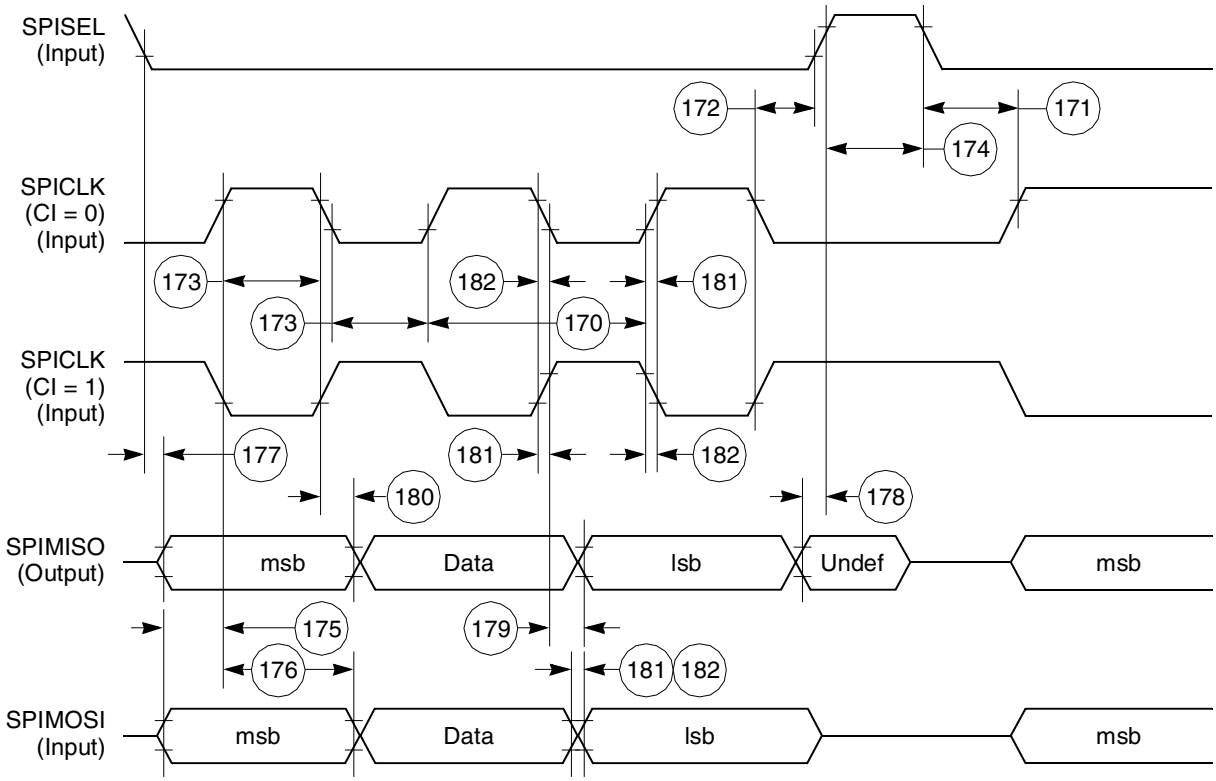

Figure 68. SPI Slave (CP = 0) Timing Diagram

Downloaded from Arrow.com.

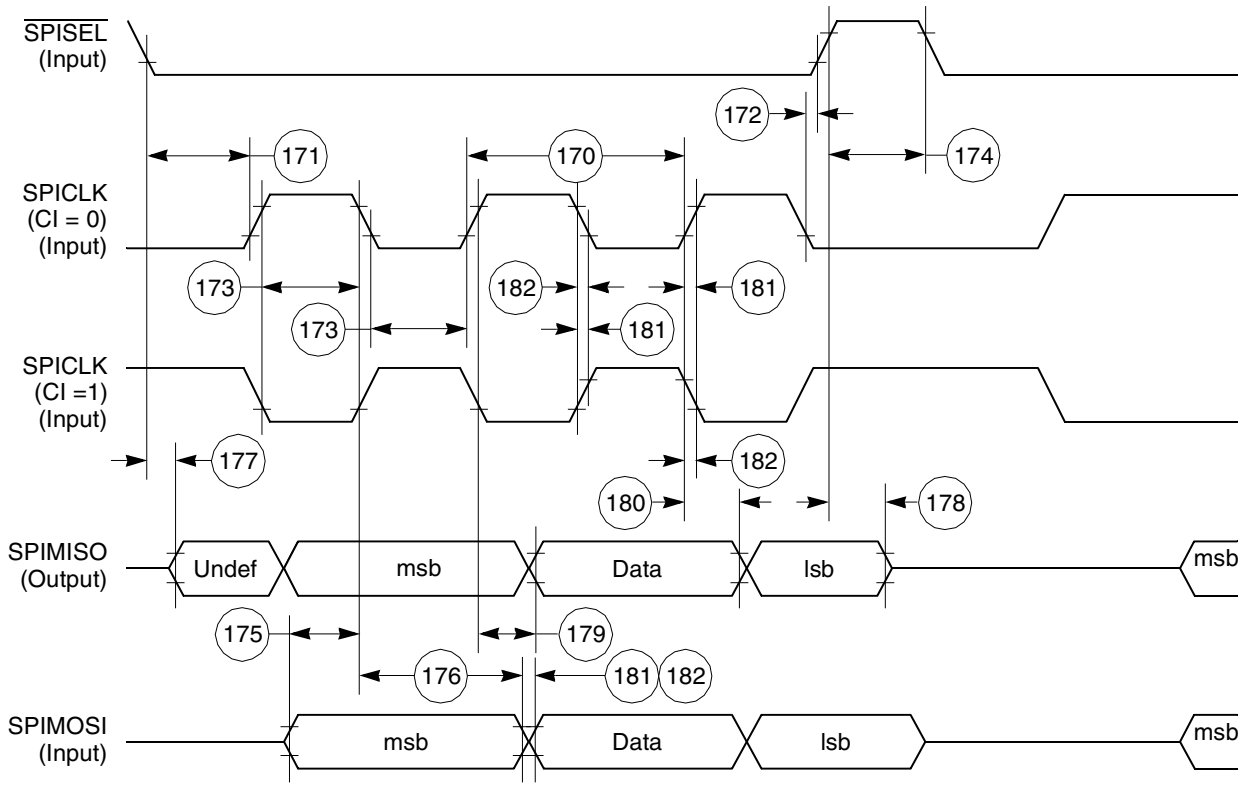

Figure 69. SPI Slave (CP = 1) Timing Diagram

12.12 I²C AC Electrical Specifications

Table 28 provides the I²C (SCL < 100 kHz) timings.

Table 28. I²C Timing (SCL < 100 kHz)

Num	Characteristic	All Frequencies		Unit
		Min	Max	
200	SCL clock frequency (slave)	0	100	kHz
200	SCL clock frequency (master)[1]	1.5	100	kHz
202	Bus free time between transmissions	4.7	—	µs
203	Low period of SCL	4.7	—	µs
204	High period of SCL	4.0	—	µs
205	Start condition setup time	4.7	—	µs
206	Start condition hold time	4.0	—	µs
207	Data hold time	0	—	µs
208	Data setup time	250	—	ns
209	SDL/SCL rise time	—	1	µs

Downloaded from Arrow.com.

Table 28. I²C Timing (SCL < 100 kHz) (continued)

Num	Characteristic	All Frequencies		Unit
		Min	Max	
210	SDL/SCL fall time	—	300	ns
211	Stop condition setup time	4.7	—	µs

1 SCL frequency is given by SCL = BRGCLK_frequency/((BRG register + 3) × pre_scaler × 2).
The ratio SyncClk/(BRGCLK/pre_scaler) must be greater or equal to 4/1.

Table 29 provides the I²C (SCL > 100 kHz) timings.

Table 29. I²C Timing (SCL > 100 kHz)

Num	Characteristic	Expression	All Frequencies		Unit
			Min	Max	
200	SCL clock frequency (slave)	fSCL	0	BRGCLK/48	Hz
200	SCL clock frequency (master)[1]	fSCL	BRGCLK/16512	BRGCLK/48	Hz
202	Bus free time between transmissions	—	1/(2.2 × fSCL)	—	s
203	Low period of SCL	—	1/(2.2 × fSCL)	—	s
204	High period of SCL	—	1/(2.2 × fSCL)	—	s
205	Start condition setup time	—	1/(2.2 × fSCL)	—	s
206	Start condition hold time	—	1/(2.2 × fSCL)	—	s
207	Data hold time	—	0	—	s
208	Data setup time	—	1/(40 × fSCL)	—	s
209	SDL/SCL rise time	—	—	1/(10 × fSCL)	s
210	SDL/SCL fall time	—	—	1/(33 × fSCL)	s
211	Stop condition setup time	—	1/2(2.2 × fSCL)	—	s

1 SCL frequency is given by SCL = BrgClk_frequency/((BRG register + 3) × pre_scaler × 2).
The ratio SyncClk/(Brg_Clk/pre_scaler) must be greater or equal to 4/1.

Figure 70 shows the I²C bus timing.

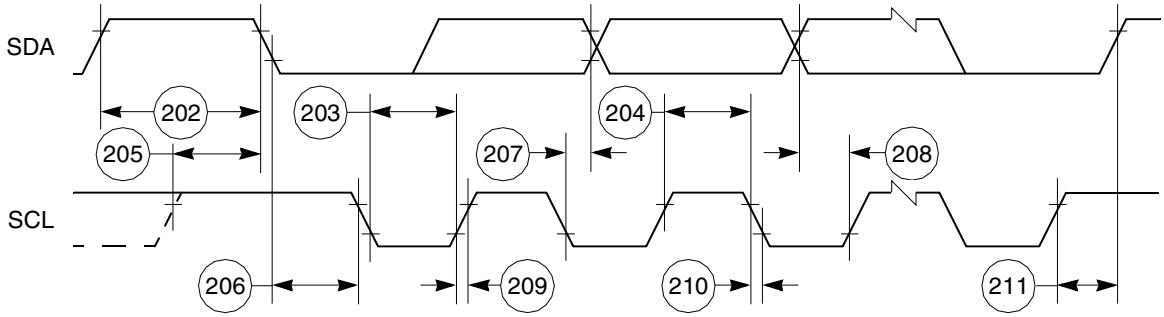

Figure 70. I²C Bus Timing Diagram

Downloaded from Arrow.com.

13 UTOPIA AC Electrical Specifications

Table 30, Table 31, and Table 32, show the AC electrical specifications for the UTOPIA interface.

Table 30. UTOPIA Master (Muxed Mode) Electrical Specifications

Num	Signal Characteristic	Direction	Min	Max	Unit
U1	UtpClk rise/fall time (internal clock option)	Output		4	ns
	Duty cycle		50	50	%
	Frequency			33	MHz
U2	UTPB, SOC, $\overline{\text{RxEnb}}$, $\overline{\text{TxEnb}}$, RxAddr, and TxAddr active delay (PHREQ and PHSEL active delay in multi-PHY mode)	Output	2	16	ns
U3	UTPB, SOC, Rxclav, and Txclav setup time	Input	4		ns
U4	UTPB, SOC, Rxclav, and Txclav hold time	Input	1		ns

Table 31. UTOPIA Master (Split Bus Mode) Electrical Specifications

Num	Signal Characteristic	Direction	Min	Max	Unit
U1	UtpClk rise/fall time (Internal clock option)	Output		4	ns
	Duty cycle		50	50	%
	Frequency			33	MHz
U2	UTPB, SOC, $\overline{\text{RxEnb}}$, $\overline{\text{TxEnb}}$, RxAddr, and TxAddr active delay (PHREQ and PHSEL active delay in multi-PHY mode)	Output	2	16	ns
U3	UTPB_Aux, SOC_Aux, Rxclav, and Txclav setup time	Input	4		ns
U4	UTPB_Aux, SOC_Aux, Rxclav, and Txclav hold time	Input	1		ns

Table 32. UTOPIA Slave (Split Bus Mode) Electrical Specifications

Num	Signal Characteristic	Direction	Min	Max	Unit
U1	UtpClk rise/fall time (external clock option)	Input		4	ns
	Duty cycle		40	60	%
	Frequency			33	MHz
U2	UTPB, SOC, Rxclav, and Txclav active delay	Output	2	16	ns
U3	UTPB_AUX, SOC_Aux, $\overline{\text{RxEnb}}$, $\overline{\text{TxEnb}}$, RxAddr, and TxAddr setup time	Input	4		ns
U4	UTPB_AUX, SOC_Aux, $\overline{\text{RxEnb}}$, $\overline{\text{TxEnb}}$, RxAddr, and TxAddr hold time	Input	1		ns

Downloaded from Arrow.com.

Figure 71 shows signal timings during UTOPIA receive operations.

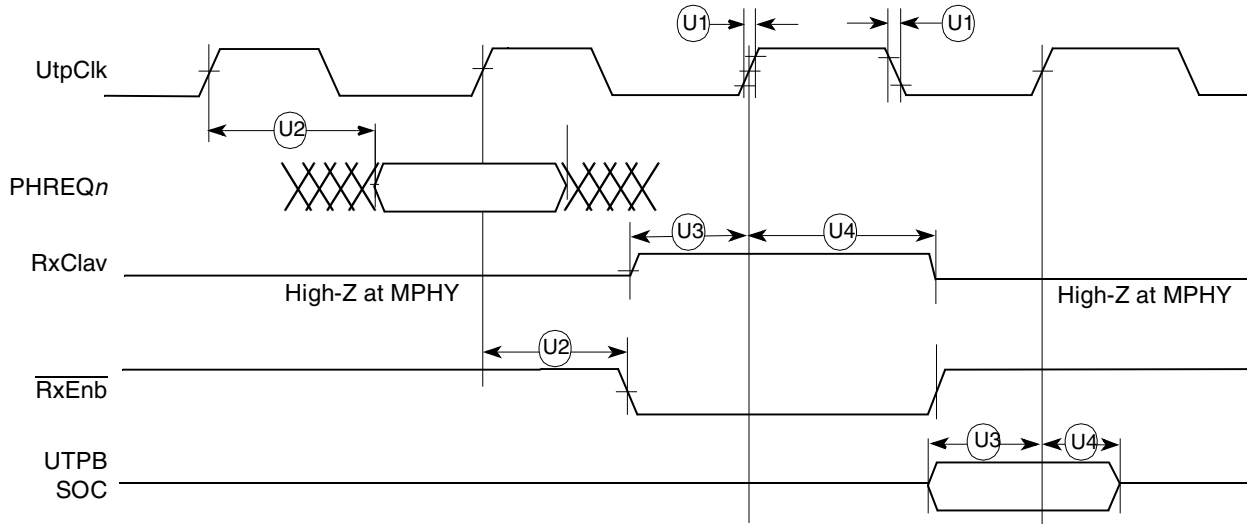

Figure 71. UTOPIA Receive Timing

Figure 72 shows signal timings during UTOPIA transmit operations.

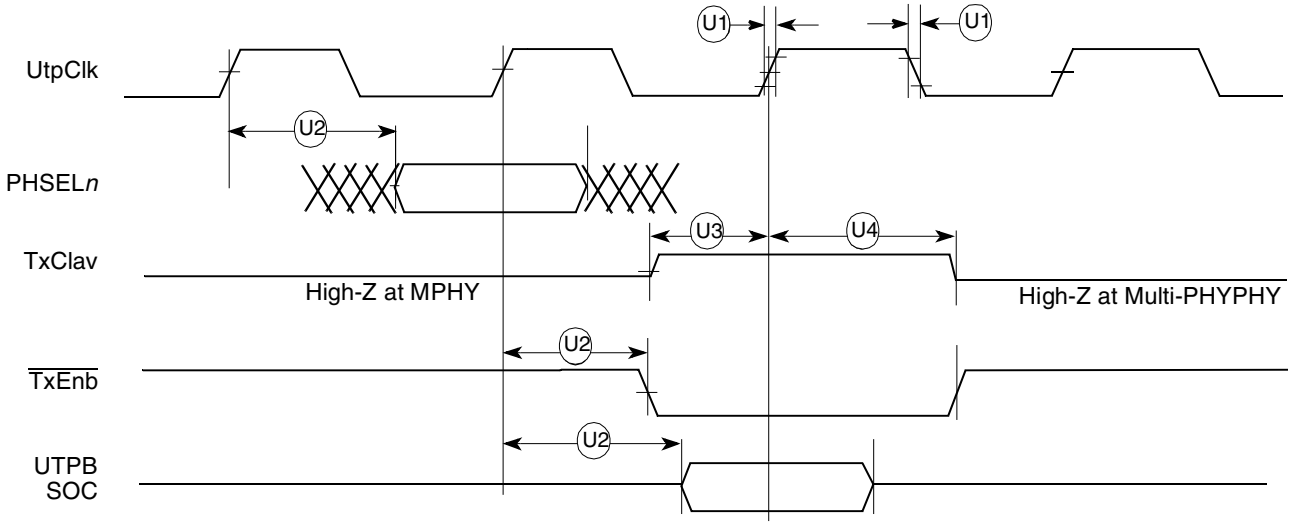

Figure 72. UTOPIA Transmit Timing

Downloaded from Arrow.com.

14 USB Electrical Characteristics

This section provides the AC timings for the USB interface.

14.1 USB Interface AC Timing Specifications

The USB Port uses the transmit clock on SCC1. Table 33 lists the USB interface timings.

Table 33. USB Interface AC Timing Specifications

Name	Characteristic	All Frequencies		Unit
		Min	Max	
US1	USBCLK frequency of operation[1] Low speed Full speed	6 48		MHz MHz
US4	USBCLK duty cycle (measured at 1.5 V)	45	55	%

[1] USBCLK accuracy should be ±500 ppm or better. USBCLK may be stopped to conserve power.

15 FEC Electrical Characteristics

This section provides the AC electrical specifications for the fast Ethernet controller (FEC). Note that the timing specifications for the MII signals are independent of system clock frequency (part speed designation). Also, MII signals use TTL signal levels compatible with devices operating at either 5.0 or 3.3 V.

15.1 MII and Reduced MII Receive Signal Timing

The receiver functions correctly up to a MII_RX_CLK maximum frequency of 25 MHz + 1%. The reduced MII (RMII) receiver functions correctly up to a RMII_REFCLK maximum frequency of 50 MHz + 1%. There is no minimum frequency requirement. In addition, the processor clock frequency must exceed the MII_RX_CLK frequency – 1%.

Table 34 provides information on the MII and RMII receive signal timing.

Table 34. MII Receive Signal Timing

Num	Characteristic	Min	Max	Unit
M1	MII_RXD[3:0], MII_RX_DV, MII_RX_ERR to MII_RX_CLK setup	5	—	ns
M2	MII_RX_CLK to MII_RXD[3:0], MII_RX_DV, MII_RX_ER hold	5	—	ns
M3	MII_RX_CLK pulse width high	35%	65%	MII_RX_CLK period
M4	MII_RX_CLK pulse width low	35%	65%	MII_RX_CLK period
M1_RMII	RMII_RXD[1:0], RMII_CRS_DV, RMII_RX_ERR to RMII_REFCLK setup	4	—	ns
M2_RMII	RMII_REFCLK to RMII_RXD[1:0], RMII_CRS_DV, RMII_RX_ERR hold	2	—	ns

Downloaded from Arrow.com.

Figure 73 shows MII receive signal timing.

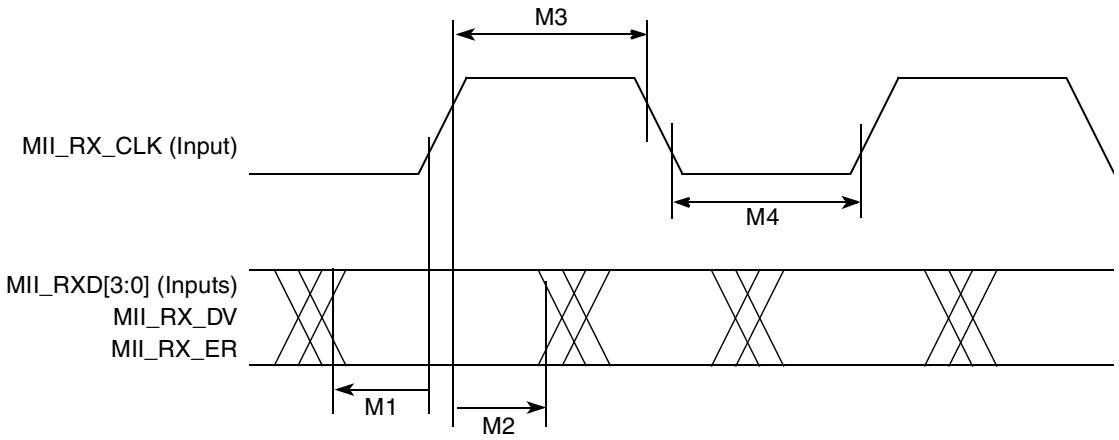

Figure 73. MII Receive Signal Timing Diagram

15.2 MII and Reduced MII Transmit Signal Timing

The transmitter functions correctly up to a MII_TX_CLK maximum frequency of 25 MHz + 1%. The RMII transmitter functions correctly up to a RMII_REFCLK maximum frequency of 50 MHz + 1%. There is no minimum frequency requirement. In addition, the processor clock frequency must exceed the MII_TX_CLK frequency – 1%.

Table 35 provides information on the MII and RMII transmit signal timing.

Table 35. MII Transmit Signal Timing

Num	Characteristic	Min	Max	Unit
M5	MII_TX_CLK to MII_TXD[3:0], MII_TX_EN, MII_TX_ER invalid	5	—	ns
M6	MII_TX_CLK to MII_TXD[3:0], MII_TX_EN, MII_TX_ER valid	—	25	ns
M20_RMII	RMII_TXD[1:0], RMII_TX_EN to RMII_REFCLK setup	4	—	ns
M21_RMII	RMII_TXD[1:0], RMII_TX_EN data hold from RMII_REFCLK rising edge	2	—	ns
M7	MII_TX_CLK and RMII_REFCLK pulse width high	35%	65%	MII_TX_CLK or RMII_REFCLK period
M8	MII_TX_CLK and RMII_REFCLK pulse width low	35%	65%	MII_TX_CLK or RMII_REFCLK period

Downloaded from Arrow.com.

Figure 74 shows the MII transmit signal timing diagram.

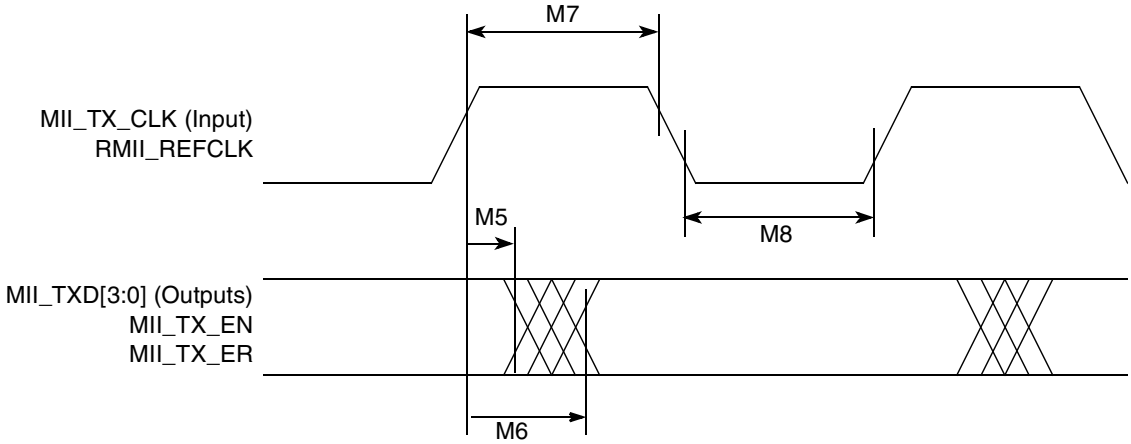

Figure 74. MII Transmit Signal Timing Diagram

15.3 MII Async Inputs Signal Timing (MII_CRS, MII_COL)

Table 36 provides information on the MII async inputs signal timing.

Table 36. MII Async Inputs Signal Timing

Num	Characteristic	Min	Max	Unit
M9	MII_CRS, MII_COL minimum pulse width	1.5	—	MII_TX_CLK period

Figure 75 shows the MII asynchronous inputs signal timing diagram.

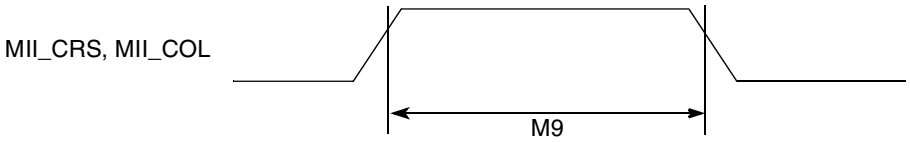

Figure 75. MII Async Inputs Timing Diagram

15.4 MII Serial Management Channel Timing (MII_MDIO, MII_MDC)

Table 37 provides information on the MII serial management channel signal timing. The FEC functions correctly with a maximum MDC frequency in excess of 2.5 MHz.

Table 37. MII Serial Management Channel Timing

Num	Characteristic	Min	Max	Unit
M10	MII_MDC falling edge to MII_MDIO output invalid (minimum propagation delay)	0	—	ns
M11	MII_MDC falling edge to MII_MDIO output valid (max prop delay)	—	25	ns
M12	MII_MDIO (input) to MII_MDC rising edge setup	10	—	ns
M13	MII_MDIO (input) to MII_MDC rising edge hold	0	—	ns

Downloaded from Arrow.com.

Table 37. MII Serial Management Channel Timing (continued)

Num	Characteristic	Min	Max	Unit
M14	MII_MDC pulse width high	40%	60%	MII_MDC period
M15	MII_MDC pulse width low	40%	60%	MII_MDC period

Figure 76 shows the MII serial management channel timing diagram.

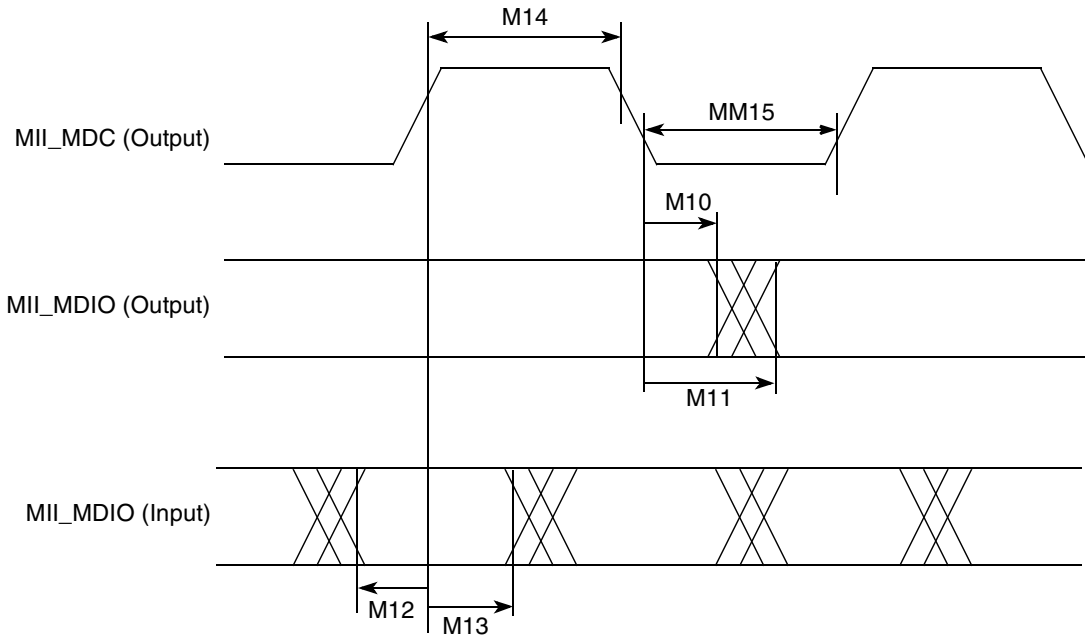

Figure 76. MII Serial Management Channel Timing Diagram

Downloaded from Arrow.com.

16 Mechanical Data and Ordering Information

Table 38 identifies the available packages and operating frequencies for the MPC885/MPC880 derivative devices.

Table 38. Available MPC885/MPC880 Packages/Frequencies

Package Type	Temperature (Tj)	Frequency (MHz)	Order Number
Plastic ball grid array ZP suffix — Leaded VR suffix — Lead-Free are available as needed	0°C to 95°C	66	KMPC885ZP66 KMPC880ZP66 MPC885ZP66 MPC880ZP66
		80	KMPC885ZP80 KMPC880ZP80 MPC885ZP80 MPC880ZP80
		133	KMPC885ZP133 KMPC880ZP133 MPC885ZP133 MPC880ZP133
Plastic ball grid array CZP suffix — Leaded CVR suffix — Lead-Free are available as needed	-40°C to 100°C	66	KMPC885CZP66 KMPC880CZP66 MPC885CZP66 MPC880CZP66
		133	KMPC885CZP133 KMPC880CZP133 MPC885CZP133 MPC880CZP133

Downloaded from Arrow.com.

16.1 Pin Assignments

Figure 77 shows the top-view pinout of the PBGA package. For additional information, see the *MPC885 PowerQUICC™ Family Reference Manual*.

NOTE: This is the top view of the device.

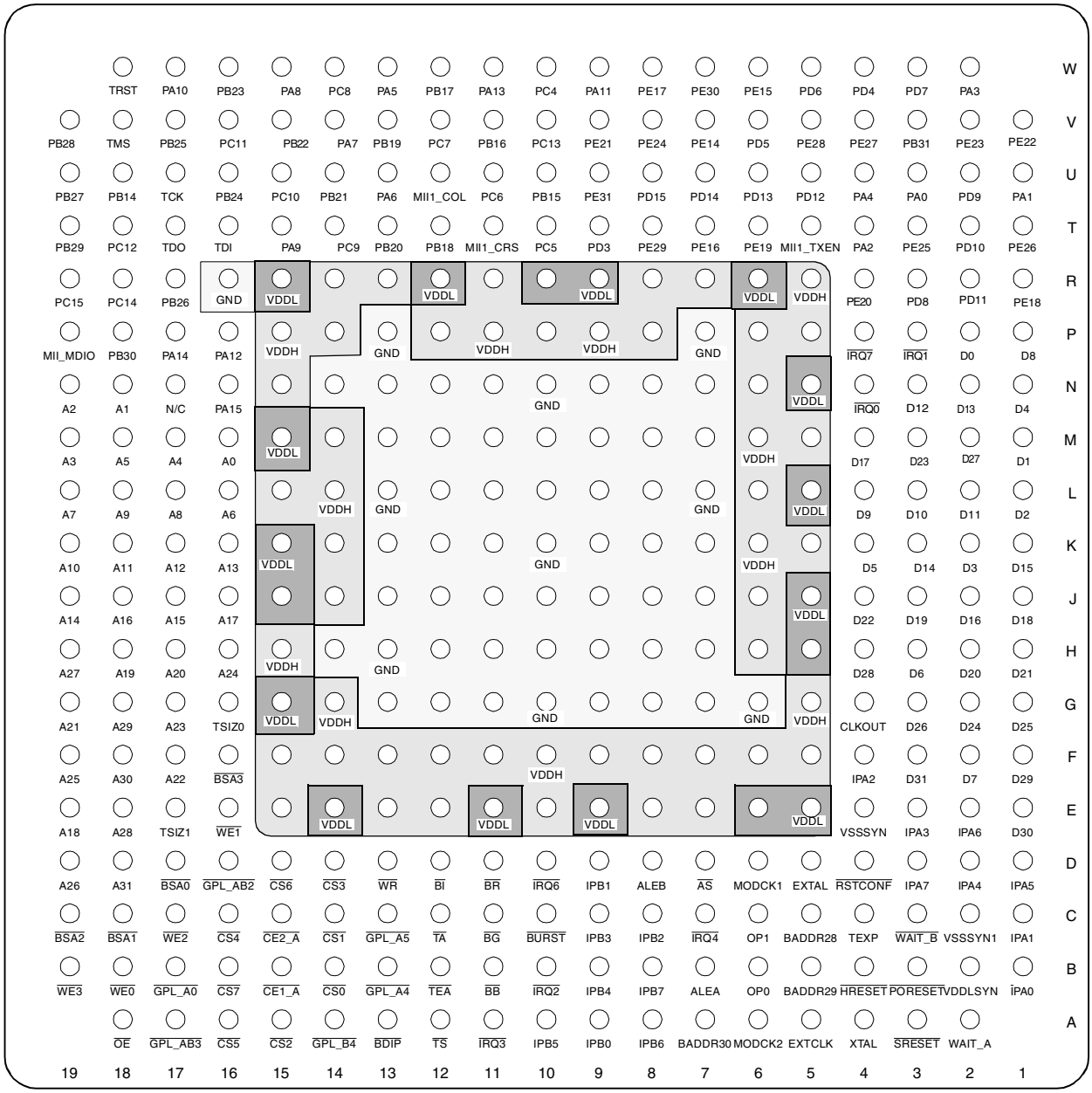

Figure 77. Pinout of the PBGA Package

Downloaded from Arrow.com.

Table 39 contains a list of the MPC885 input and output signals and shows multiplexing and pin assignments.

Table 39. Pin Assignments

Name	Pin Number	Type
A[0:31]	M16, N18, N19, M19, M17, M18, L16, L19, L17, L18, K19, K18, K17, K16, J19, J17, J18, J16, E19, H18, H17, G19, F17, G17, H16, F19, D19, H19, E18, G18, F18, D18	Bidirectional Three-state
D[0:31]	P2, M1, L1, K2, N1, K4, H3, F2, P1, L4, L3, L2, N3, N2, K3, K1, J2, M4, J1, J3, H2, H1, J4, M3, G2, G1, G3, M2, H4, F1, E1, F3	Bidirectional Three-state
TSIZ0, $\overline{\text{REG}}$	G16	Bidirectional Three-state
TSIZ1	E17	Bidirectional Three-state
RD/$\overline{\text{WR}}$	D13	Bidirectional Three-state
$\overline{\text{BURST}}$	C10	Bidirectional Three-state
$\overline{\text{BDIP}}$, $\overline{\text{GPL_B5}}$	A13	Output
$\overline{\text{TS}}$	A12	Bidirectional Active pull-up
$\overline{\text{TA}}$	C12	Bidirectional Active pull-up
$\overline{\text{TEA}}$	B12	Open-drain
$\overline{\text{BI}}$	D12	Bidirectional Active pull-up
$\overline{\text{IRQ2}}$, $\overline{\text{RSV}}$	B10	Bidirectional Three-state
$\overline{\text{IRQ4}}$, $\overline{\text{KR}}$, $\overline{\text{RETRY}}$, SPKROUT	C7	Bidirectional Three-state
$\overline{\text{CR}}$, $\overline{\text{IRQ3}}$	A11	Input
$\overline{\text{BR}}$	D11	Bidirectional
$\overline{\text{BG}}$	C11	Bidirectional
$\overline{\text{BB}}$	B11	Bidirectional Active pull-up
FRZ, $\overline{\text{IRQ6}}$	D10	Bidirectional
$\overline{\text{IRQ0}}$	N4	Input
$\overline{\text{IRQ1}}$	P3	Input
$\overline{\text{IRQ7}}$	P4	Input
$\overline{\text{CS}}$[0:5]	B14, C14, A15, D14, C16, A16	Output
$\overline{\text{CS6}}$, $\overline{\text{CE1_B}}$	D15	Output
$\overline{\text{CS7}}$, $\overline{\text{CE2_B}}$	B16	Output

Downloaded from Arrow.com.

Table 39. Pin Assignments (continued)

Name	Pin Number	Type
$\overline{\text{WE0}}$, $\overline{\text{BS_B0}}$, $\overline{\text{IORD}}$	B18	Output
$\overline{\text{WE1}}$, $\overline{\text{BS_B1}}$, $\overline{\text{IOWR}}$	E16	Output
$\overline{\text{WE2}}$, $\overline{\text{BS_B2}}$, $\overline{\text{PCOE}}$	C17	Output
$\overline{\text{WE3}}$, $\overline{\text{BS_B3}}$, $\overline{\text{PCWE}}$	B19	Output
$\overline{\text{BS_A}}$[0:3]	D17, C18, C19, F16	Output
$\overline{\text{GPL_A0}}$, $\overline{\text{GPL_B0}}$	B17	Output
$\overline{\text{OE}}$, $\overline{\text{GPL_A1}}$, $\overline{\text{GPL_B1}}$	A18	Output
$\overline{\text{GPL_A}}$[2:3], $\overline{\text{GPL_B}}$[2:3], $\overline{\text{CS}}$[2:3]	D16, A17	Output
UPWAITA, $\overline{\text{GPL_A4}}$	B13	Bidirectional
UPWAITB, $\overline{\text{GPL_B4}}$	A14	Bidirectional
$\overline{\text{GPL_A5}}$	C13	Output
$\overline{\text{PORESET}}$	B3	Input
$\overline{\text{RSTCONF}}$	D4	Input
$\overline{\text{HRESET}}$	B4	Open-drain
$\overline{\text{SRESET}}$	A3	Open-drain
XTAL	A4	Analog output
EXTAL	D5	Analog input (3.3 V only)
CLKOUT	G4	Output
EXTCLK	A5	Input (3.3 V only)
TEXP	C4	Output
ALE_A	B7	Output
$\overline{\text{CE1_A}}$	B15	Output
$\overline{\text{CE2_A}}$	C15	Output
$\overline{\text{WAIT_A}}$, SOC_Split[1]	A2	Input
$\overline{\text{WAIT_B}}$	C3	Input
IP_A0, UTPB_Split0[1]	B1	Input
IP_A1, UTPB_Split1[1]	C1	Input
IP_A2, $\overline{\text{IOIS16_A}}$, UTPB_Split2[1]	F4	Input
IP_A3, UTPB_Split3[1]	E3	Input
IP_A4, UTPB_Split4[1]	D2	Input
IP_A5, UTPB_Split5[1]	D1	Input
IP_A6, UTPB_Split6[1]	E2	Input
IP_A7, UTPB_Split7[1]	D3	Input

Downloaded from Arrow.com.

Table 39. Pin Assignments (continued)

Name	Pin Number	Type
ALE_B, DSCK/AT1	D8	Bidirectional Three-state
IP_B[0:1], IWP[0:1], VFLS[0:1]	A9, D9	Bidirectional
IP_B2, $\overline{\text{IOIS16_B}}$, AT2	C8	Bidirectional Three-state
IP_B3, IWP2, VF2	C9	Bidirectional
IP_B4, LWP0, VF0	B9	Bidirectional
IP_B5, LWP1, VF1	A10	Bidirectional
IP_B6, DSDI, AT0	A8	Bidirectional Three-state
IP_B7, $\overline{\text{PTR}}$, AT3	B8	Bidirectional Three-state
OP0, UtpClk_Split[1]	B6	Bidirectional
OP1	C6	Output
OP2, MODCK1, $\overline{\text{STS}}$	D6	Bidirectional
OP3, MODCK2, DSDO	A6	Bidirectional
BADDR30, $\overline{\text{REG}}$	A7	Output
BADDR[28:29]	C5, B5	Output
$\overline{\text{AS}}$	D7	Input
PA15, USBRXD	N16	Bidirectional
PA14, $\overline{\text{USBOE}}$	P17	Bidirectional (Optional: open-drain)
PA13, RXD2	W11	Bidirectional
PA12, TXD2	P16	Bidirectional (Optional: open-drain)
PA11, RXD4, MII1-TXD0, RMII1-TXD0	W9	Bidirectional (Optional: open-drain)
PA10, MII1-TXER, TIN4, CLK7	W17	Bidirectional (Optional: open-drain)
PA9, L1TXDA, RXD3	T15	Bidirectional (Optional: open-drain)
PA8, L1RXDA, TXD3	W15	Bidirectional (Optional: open-drain)
PA7, CLK1, L1RCLKA, BRGO1, TIN1	V14	Bidirectional
PA6, CLK2, $\overline{\text{TOUT1}}$	U13	Bidirectional
PA5, CLK3, L1TCLKA, BRGO2, TIN2	W13	Bidirectional

Downloaded from Arrow.com.

Table 39. Pin Assignments (continued)

Name	Pin Number	Type
PA4, $\overline{\text{CTS4}}$, MII1-TXD1, RMII1-TXD1	U4	Bidirectional
PA3, MII1-RXER, RMII1-RXER, BRGO3	W2	Bidirectional
PA2, MII1-RXDV, RMII1-CRS_DV, TXD4	T4	Bidirectional
PA1, MII1-RXD0, RMII1-RXD0, BRGO4	U1	Bidirectional
PA0, MII1-RXD1, RMII1-RXD1, $\overline{\text{TOUT4}}$	U3	Bidirectional
PB31, $\overline{\text{SPISEL}}$, MII1-TXCLK, RMII1-REFCLK	V3	Bidirectional (Optional: open-drain)
PB30, SPICLK	P18	Bidirectional (Optional: open-drain)
PB29, SPIMOSI	T19	Bidirectional (Optional: open-drain)
PB28, SPIMISO, BRGO4	V19	Bidirectional (Optional: open-drain)
PB27, I2CSDA, BRGO1	U19	Bidirectional (Optional: open-drain)
PB26, I2CSCL, BRGO2	R17	Bidirectional (Optional: open-drain)
PB25, RXADDR3[1], TXADDR3, SMTXD1	V17	Bidirectional (Optional: open-drain)
PB24, TXADDR3[1], RXADDR3, SMRXD1	U16	Bidirectional (Optional: open-drain)
PB23, TXADDR2[1], RXADDR2, $\overline{\text{SDACK1}}$, $\overline{\text{SMSYN1}}$	W16	Bidirectional (Optional: open-drain)
PB22, TXADDR4[1], RXADDR4, $\overline{\text{SDACK2}}$, $\overline{\text{SMSYN2}}$	V15	Bidirectional (Optional: open-drain)
PB21, SMTXD2, TXADDR1[1], BRG01, RXADDR1, PHSEL[1]	U14	Bidirectional (Optional: open-drain)
PB20, SMRXD2, L1CLKOA, TXADDR0[1], RXADDR0, PHSEL[0]	T13	Bidirectional (Optional: open-drain)
PB19, MII1-RXD3, $\overline{\text{RTS4}}$	V13	Bidirectional (Optional: open-drain)
PB18, RXADDR4[1], TXADDR4, $\overline{\text{RTS2}}$, L1ST2	T12	Bidirectional (Optional: open-drain)

Downloaded from Arrow.com.

Table 39. Pin Assignments (continued)

Name	Pin Number	Type
PB17, L1ST3, BRGO2, RXADDR1[1], TXADDR1, PHREQ[1]	W12	Bidirectional (Optional: open-drain)
PB16, $\overline{\text{L1RQa}}$, L1ST4, $\overline{\text{RTS4}}$, RXADDR0[1], TXADDR0, PHREQ[0]	V11	Bidirectional (Optional: open-drain)
PB15, TXCLAV, BRG03, RXCLAV	U10	Bidirectional
PB14RXADDR2[1], TXADDR2	U18	Bidirectional
PC15, $\overline{\text{DREQ0}}$, $\overline{\text{RTS3}}$, L1ST1, TXCLAV, RXCLAV	R19	Bidirectional
PC14, $\overline{\text{DREQ1}}$, $\overline{\text{RTS2}}$, L1ST2	R18	Bidirectional
PC13, MII1-TXD3, $\overline{\text{SDACK1}}$	V10	Bidirectional
PC12, MII1-TXD2, $\overline{\text{TOUT1}}$	T18	Bidirectional
PC11, USBRXP	V16	Bidirectional
PC10, USBRXN, $\overline{\text{TGATE1}}$	U15	Bidirectional
PC9, $\overline{\text{CTS2}}$	T14	Bidirectional
PC8, $\overline{\text{CD2}}$, $\overline{\text{TGATE2}}$	W14	Bidirectional
PC7, $\overline{\text{CTS4}}$, L1TSYNCB, USBTXP	V12	Bidirectional
PC6, $\overline{\text{CD4}}$, L1RSYNCB, USBTXN	U11	Bidirectional
PC5, $\overline{\text{CTS3}}$, L1TSYNCA, SDACK2	T10	Bidirectional
PC4, $\overline{\text{CD3}}$, L1RSYNCA	W10	Bidirectional
PD15, L1TSYNCA, UTPB0	U8	Bidirectional
PD14, L1RSYNCA, UTPB1	U7	Bidirectional
PD13, L1TSYNCB, UTPB2	U6	Bidirectional
PD12, L1RSYNCB, UTPB3	U5	Bidirectional
PD11, RXD3, $\overline{\text{RXENB}}$	R2	Bidirectional
PD10, TXD3, $\overline{\text{TXENB}}$	T2	Bidirectional
PD9, TXD4, UTPCLK	U2	Bidirectional
PD8, RXD4, MII-MDC, RMII-MDC	R3	Bidirectional
PD7, $\overline{\text{RTS3}}$, UTPB4	W3	Bidirectional
PD6, $\overline{\text{RTS4}}$, UTPB5	W5	Bidirectional

Downloaded from Arrow.com.

Table 39. Pin Assignments (continued)

Name	Pin Number	Type
PD5, CLK8, L1TCLKB, UTPB6	V6	Bidirectional
PD4, CLK4, UTPB7	W4	Bidirectional
PD3, CLK7, TIN4, SOC	T9	Bidirectional
PE31, CLK8, L1TCLKB, MII1-RXCLK	U9	Bidirectional (Optional: open-drain)
PE30, L1RXDB, MII1-RXD2	W7	Bidirectional (Optional: open-drain)
PE29, MII2-CRS	T8	Bidirectional (Optional: open-drain)
PE28, $\overline{\text{TOUT3}}$, MII2-COL	V5	Bidirectional (Optional: open-drain)
PE27, $\overline{\text{RTS3}}$, L1RQB, MII2-RXER, RMII2-RXER	V4	Bidirectional (Optional: open-drain)
PE26, L1CLKOB, MII2-RXDV, RMII2-CRS_DV	T1	Bidirectional (Optional: open-drain)
PE25, RXD4, MII2-RXD3, L1ST2	T3	Bidirectional (Optional: open-drain)
PE24, SMRXD1, BRGO1, MII2-RXD2	V8	Bidirectional (Optional: open-drain)
PE23, $\overline{\text{SMSYN2}}$, TXD4, MII2-RXCLK, L1ST1	V2	Bidirectional (Optional: open-drain)
PE22, $\overline{\text{TOUT2}}$, MII2-RXD1, RMII2-RXD1, $\overline{\text{SDACK1}}$	V1	Bidirectional (Optional: open-drain)
PE21, SMRXD2, $\overline{\text{TOUT1}}$, MII2-RXD0, RMII2-RXD0, $\overline{\text{RTS3}}$	V9	Bidirectional (Optional: open-drain)
PE20, L1RSYNCA, SMTXD2, $\overline{\text{CTS3}}$, MII2-TXER	R4	Bidirectional (Optional: open-drain)
PE19, L1TXDB, MII2-TXEN, RMII2-TXEN	T6	Bidirectional (Optional: open-drain)
PE18, L1TSYNCA, SMTXD1, MII2-TXD3	R1	Bidirectional (Optional: open-drain)
PE17, TIN3, CLK5, BRGO3, $\overline{\text{SMSYN1}}$, MII2-TXD2	W8	Bidirectional (Optional: open-drain)
PE16, L1RCLKB, CLK6, TXD3, MII2-TXCLK, RMII2-REFCLK	T7	Bidirectional (Optional: open-drain)
PE15, $\overline{\text{TGATE1}}$, MII2-TXD1, RMII2-TXD1	W6	Bidirectional

Downloaded from Arrow.com.

Table 39. Pin Assignments (continued)

Name	Pin Number	Type
PE14, RXD3, MII2-TXD0, RMII2-TXD0	V7	Bidirectional
TMS	V18	Input
TDI, DSDI	T16	Input
TCK, DSCK	U17	Input
$\overline{\text{TRST}}$	W18	Input
TDO, DSDO	T17	Output
MII1_CRS	T11	Input
MII_MDIO	P19	Bidirectional
MII1_TXEN, RMII1_TXEN	T5	Output
MII1_COL	U12	Input
V_{SSSYN1}	C2	PLL analog V_{DD} and GND
V_{SSSYN}	E4	Power
V_{DDLSYN}	B2	Power
GND	G6, G7, G8, G9, G10, G11, G12, G13, H7, H8, H9, H10, H11, H12, H13, H14, J7, J8, J9, J10, J11, J12, J13, K7, K8, K9, K10, K11, K12, K13, L7, L8, L9, L10, L11, L12, L13, M7, M8, M9, M10, M11, M12, M13, N7, N8, N9, N10, N11, N12, N13, N14, P7, P13, R16	Power
V_{DDL}	E5, E6, E9, E11, E14, G15, H5, J5, J15, K15, L5, M15, N5, R6, R9, R10, R12, R15	Power
V_{DDH}	E7, E8, E10, E12, E13, E15, F5, F6, F7, F8, F9, F10, F11, F12, F13, F14, F15, G5, G14, H6, H15, J6, J14, K5, K6, K14, L6, L14, L15, M5, M6, M14, N6, N15, P5, P6, P8, P9, P10, P11, P12, P14, P15, R5, R7, R8, R11, R13, R14	Power
N/C	N17	No connect

[1] ESAR mode only.

Downloaded from Arrow.com.

16.2 Mechanical Dimensions of the PBGA Package

Figure 78 shows the mechanical dimensions of the PBGA package.

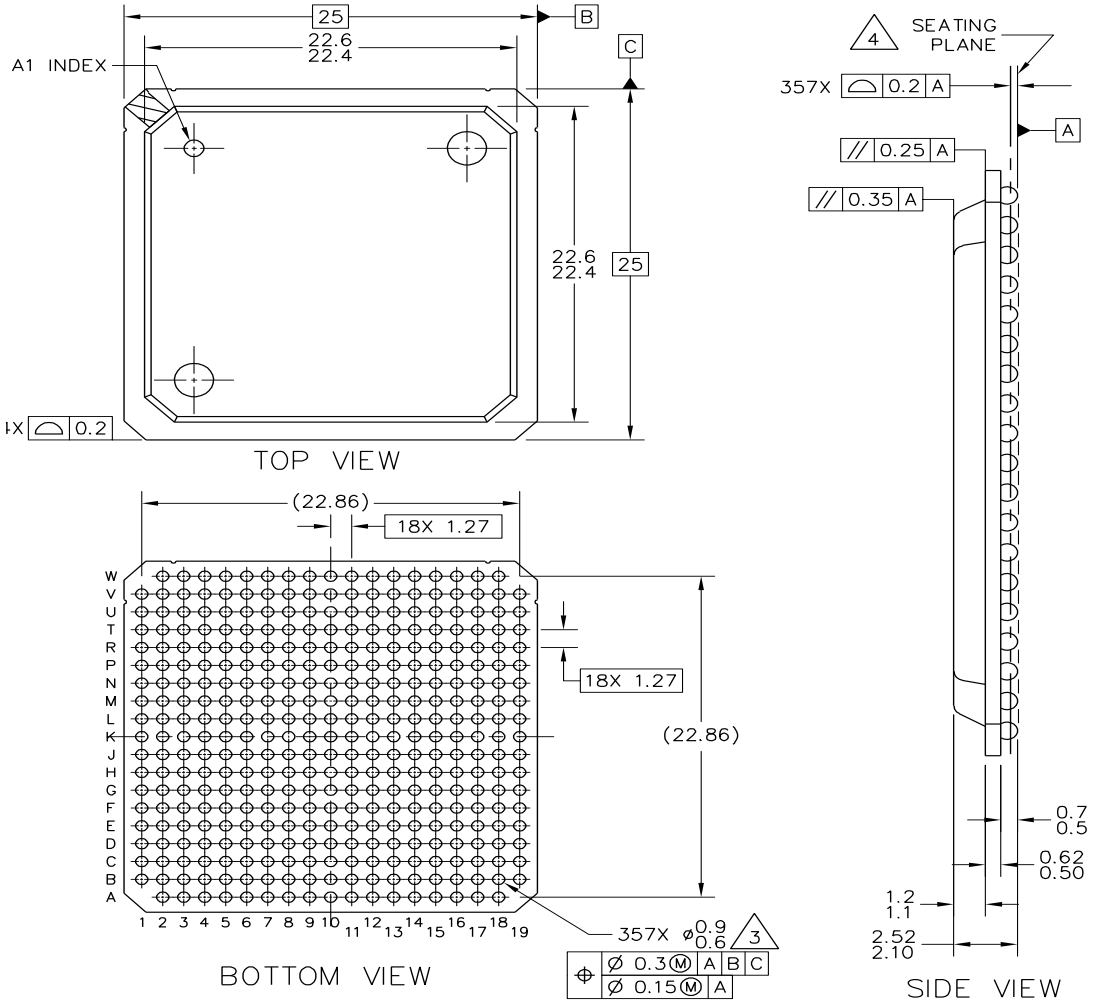

NOTES:

1. ALL DIMENSIONS ARE IN MILLIMETERS.
2. INTERPRET DIMENSIONS AND TOLERANCES PER ASME Y14.5M—1994.
3. MAXIMUM SOLDER BALL DIAMETER MEASURED PARALLEL TO DATUM A.
4. DATUM A, THE SEATING PLANE, IS DEFINED BY THE SPHERICAL CROWNS OF THE SOLDER BALLS.

Figure 78. Mechanical Dimensions and Bottom Surface Nomenclature of the PBGA Package

Downloaded from Arrow.com.

17 Document Revision History

Table 40 lists significant changes between revisions of this hardware specification.

Table 40. Document Revision History

Revision Number	Date	Changes
7	07/2010	In Table 9, "Bus Operation Timings," changed the following: • Updated TRLX condition value for B22a/b/c to "TRLX = [0 or 1]" • Removed TRLX condition for B23 • Updated condition and equation for B30 to "Invalid GPCM read/write access (MIN = 0.25 × B1 – 2.00)" • Updated note 8 to "The timing B30 refers to $\overline{CS}$ when ACS = 00 and to $\overline{CS}$ and $\overline{WE}$(0:3) when CSNT = 0."
6	05/2010	Added minimum load for CLKOUT in Section 10, "Bus Signal Timing."
5	03/2009	Updated formatting of Table 12 , "PCMCIA Port Timing," Table 13, "Debug Port Timing," Table 14, "Reset Timing," and Table 15, "JTAG Timing."
4	08/2007	• On page 1, updated first paragraph and added a second paragraph. • After Table 2, inserted a new figure showing the undershoot/overshoot voltage (Figure 3) and renumbered the rest of the figures. • In Table 9, for reset timings B29f and B29g added footnote indicating that the formula only applies to bus operation up to 50 MHz. • In Figure 6, changed all reference voltage measurement points from 0.2 and 0.8 V to 50% level. • In Table 18, changed num 46 description to read, "$\overline{TA}$ assertion to rising edge ..." • In Figure 49, changed $\overline{TA}$ to reflect the rising edge of the clock.
3.0	7/22/2004	• Added sentence to Spec B1A about EXTCLK and CLKOUT being in Alignment for Integer Values • Added a footnote to Spec 41 specifying that EDM = 1 • Added RMII1_EN under M1II_EN in Table 36 Pin Assignments • Added a tablefootnote to Table 6 DC Electrical Specifications about meeting the VIL Max of the I2C Standard • Put the new part numbers in the Ordering Information Section
2.0	12/2003	• Changed the maximum operating frequency to 133 MHz. • Put in the orderable part numbers that are orderable. • Put the timing in the 80 MHz column. • Rounded the timings to hundredths in the 80 MHz column. • Put the pin numbers in footnotes by the maximum currents in Table 6. • Changed 22 and 41 in the Timing. • Put in the Thermal numbers.
1.0	9/2003	• Added the DSP information in the Features list • Fixed table formatting. • Nontechnical edits. • Released to the external web.
0.9	8/2003	Changed the USB description to full-/low-speed compatible.
0.8	8/2003	Added the Reference to USB 2.0 to the Features list and removed 1.1 from USB on the block diagrams.
0.7	7/2003	Added the RxClav and TxClav signals to PC15.
0.6	6/2003	Changed the pin descriptions per the June 22 spec.
0.5	5/2003	Changed some more typos, put in the phsel and phreq pins. Corrected the USB timing.

Downloaded from Arrow.com.

Table 40. Document Revision History (continued)

Revision Number	Date	Changes
0.4	5/2003	Changed the pin descriptions for PD8 and PD9.
0.3	05/2003	Corrected the signals that had overlines on them.
0.2	05/2003	Made the changes to the RMII Timing, Made sure all the V_{DDL}, V_{DDH}, and GND show up on the pinout diagram. Changed the SPI Master Timing Specs. 162 and 164.
0.1	04/2003	Added pinout and pinout assignments table. Added the USB timing to Section 14. Added the Reduced MII to Section 15. Removed the Data Parity. Made some changes to the Features list.
0	02/2003	Initial revision.

Downloaded from Arrow.com.

How to Reach Us:

Home Page:
www.freescale.com

Web Support:
http://www.freescale.com/support

USA/Europe or Locations Not Listed:
Freescale Semiconductor, Inc.
Technical Information Center, EL516
2100 East Elliot Road
Tempe, Arizona 85284
1-800-521-6274 or
+1-480-768-2130
www.freescale.com/support

Europe, Middle East, and Africa:
Freescale Halbleiter Deutschland GmbH
Technical Information Center
Schatzbogen 7
81829 Muenchen, Germany
+44 1296 380 456 (English)
+46 8 52200080 (English)
+49 89 92103 559 (German)
+33 1 69 35 48 48 (French)
www.freescale.com/support

Japan:
Freescale Semiconductor Japan Ltd.
Headquarters
ARCO Tower 15F
1-8-1, Shimo-Meguro, Meguro-ku
Tokyo 153-0064
Japan
0120 191014 or
+81 3 5437 9125
support.japan@freescale.com

Asia/Pacific:
Freescale Semiconductor China Ltd.
Exchange Building 23F
No. 118 Jianguo Road
Chaoyang District
Beijing 100022
China
+86 10 5879 8000
support.asia@freescale.com

For Literature Requests Only:
Freescale Semiconductor
Literature Distribution Center
1-800 441-2447 or
+1-303-675-2140
Fax: +1-303-675-2150
LDCForFreescaleSemiconductor
@hibbertgroup.com

Information in this document is provided solely to enable system and software implementers to use Freescale Semiconductor products. There are no express or implied copyright licenses granted hereunder to design or fabricate any integrated circuits or integrated circuits based on the information in this document.

Freescale Semiconductor reserves the right to make changes without further notice to any products herein. Freescale Semiconductor makes no warranty, representation or guarantee regarding the suitability of its products for any particular purpose, nor does Freescale Semiconductor assume any liability arising out of the application or use of any product or circuit, and specifically disclaims any and all liability, including without limitation consequential or incidental damages. “Typical” parameters which may be provided in Freescale Semiconductor data sheets and/or specifications can and do vary in different applications and actual performance may vary over time. All operating parameters, including “Typicals” must be validated for each customer application by customer’s technical experts. Freescale Semiconductor does not convey any license under its patent rights nor the rights of others. Freescale Semiconductor products are not designed, intended, or authorized for use as components in systems intended for surgical implant into the body, or other applications intended to support or sustain life, or for any other application in which the failure of the Freescale Semiconductor product could create a situation where personal injury or death may occur. Should Buyer purchase or use Freescale Semiconductor products for any such unintended or unauthorized application, Buyer shall indemnify and hold Freescale Semiconductor and its officers, employees, subsidiaries, affiliates, and distributors harmless against all claims, costs, damages, and expenses, and reasonable attorney fees arising out of, directly or indirectly, any claim of personal injury or death associated with such unintended or unauthorized use, even if such claim alleges that Freescale Semiconductor was negligent regarding the design or manufacture of the part.

Freescale, the Freescale logo, and PowerQUICC, are trademarks of Freescale Semiconductor, Inc. Reg. U.S. Pat. & Tm. Off. All other product or service names are the property of their respective owners. The Power Architecture and Power.org word marks and the Power and Power.org logos and related marks are trademarks and service marks licensed by Power.org.
© 2010 Freescale Semiconductor, Inc.

Document Number: MPC885EC
Rev. 7
07/2010

Downloaded from Arrow.com.