Jul.1.2026 Copyright 2026 HIROSE ELECTRIC CO., LTD. All Rights Reserved.
In case of consideration for using Automotive equipment / device which demand high reliability, kindly contact our sales window correspondents.

PART No.	CODE No.	NUMBER OF CONTACTS	A	B	C
DF13- 2P-1.25DSA(05)	CL536-0101-9-05	2	1.25	3.15	4.15
DF13- 3P-1.25DSA(05)	CL536-0102-1-05	3	2.5	4.4	5.4
DF13- 4P-1.25DSA(05)	CL536-0103-4-05	4	3.75	5.65	6.65
DF13- 5P-1.25DSA(05)	CL536-0104-7-05	5	5	6.9	7.9
DF13- 6P-1.25DSA(05)	CL536-0105-0-05	6	6.25	8.15	9.15
DF13- 7P-1.25DSA(05)	CL536-0106-2-05	7	7.5	9.4	10.4
DF13- 8P-1.25DSA(05)	CL536-0107-5-05	8	8.75	10.65	11.65
DF13- 9P-1.25DSA(05)	CL536-0108-8-05	9	10	11.9	12.9
DF13-10P-1.25DSA(05)	CL536-0109-0-05	10	11.25	13.15	14.15
DF13-11P-1.25DSA(05)	CL536-0110-0-05	11	12.5	14.4	15.4
DF13-12P-1.25DSA(05)	CL536-0111-2-05	12	13.75	15.65	16.65
DF13-13P-1.25DSA(05)	CL536-0112-5-05	13	15	16.9	17.9
DF13-14P-1.25DSA(05)	CL536-0113-8-05	14	16.25	18.15	19.15
DF13-15P-1.25DSA(05)	CL536-0114-0-05	15	17.5	19.4	20.4

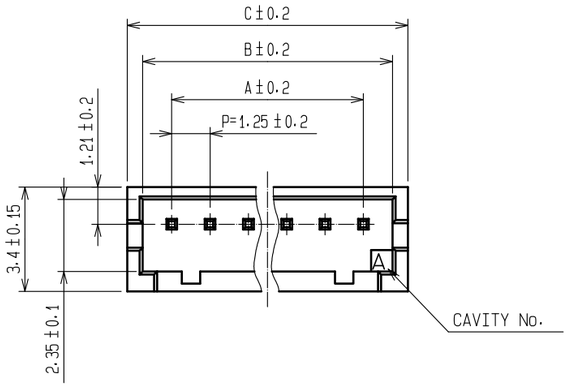

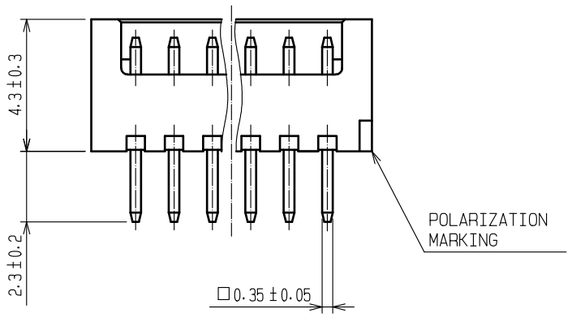

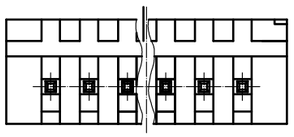

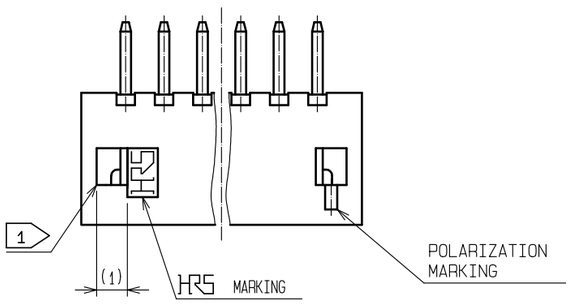

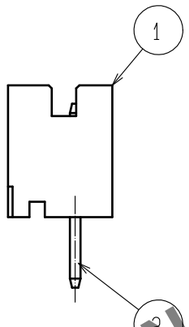

2 APPLICATION FIGURE

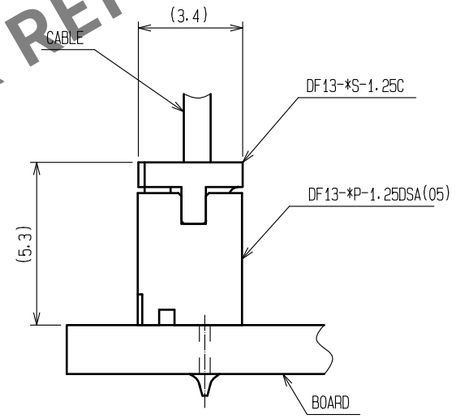

3 RECOMMENDED PATTERN (BOARD THICKNESS 1mm)

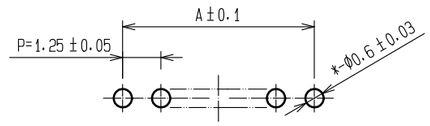

1 WHEN THIS CONNECTOR HAS TWO OR THREE CONTACTS, THE LOCK OF CONNECTOR SHALL BE SET AT THE CENTER OF HOUSING. IN CASE THAT THE NUMBER OF CONTACTS IS MORE THAN FOUR, THE TWO LOCKS SHALL BE SET IN ACCORDANCE WITH THE DRAWINGS.
2 WHEN THIS CONNECTOR MATES WITH DF13-*S-1.25C, THE MATING HEIGHT IS 5.3mm.
3 RECOMMENDED THROUGH HOLE DIA. : φ0.6±0.03
4 100 CONNECTORS ARE IN ONE PACK.

NO.	MATERIAL	FINISH , REMARKS	NO.	MATERIAL	FINISH , REMARKS
1	POLYAMIDE	BEIGE(NATURAL). UL94V-0	2	BRASS	SURFACE:TIN PLATED 1μm min UNDER PLATING:COPPER PLATED 1μm min

UNITS	SCALE	COUNT	DESCRIPTION OF REVISIONS	DESIGNED	CHECKED	DATE
mm	5 : 1	0				

HIROSE ELECTRIC CO., LTD.

APPROVED	: SJ. OKAMURA	20211217	DRAWING NO.	EDC-083673-05-00
CHECKED	: SZ. ONO	20211217	PART NO.	DF13-*P-1.25DSA(05)
DESIGNED	: HT. SATO	20211217	CODE NO.	CL536-
DRAWN	: SK. CHIBA	20211217		0 1/1

FORM HC0011-5-7

HRS DRAWING FOR REFERENCE

Downloaded from Arrow.com.