SERPAC Electronic Enclosures BW67SD-YY-CS-ZZ

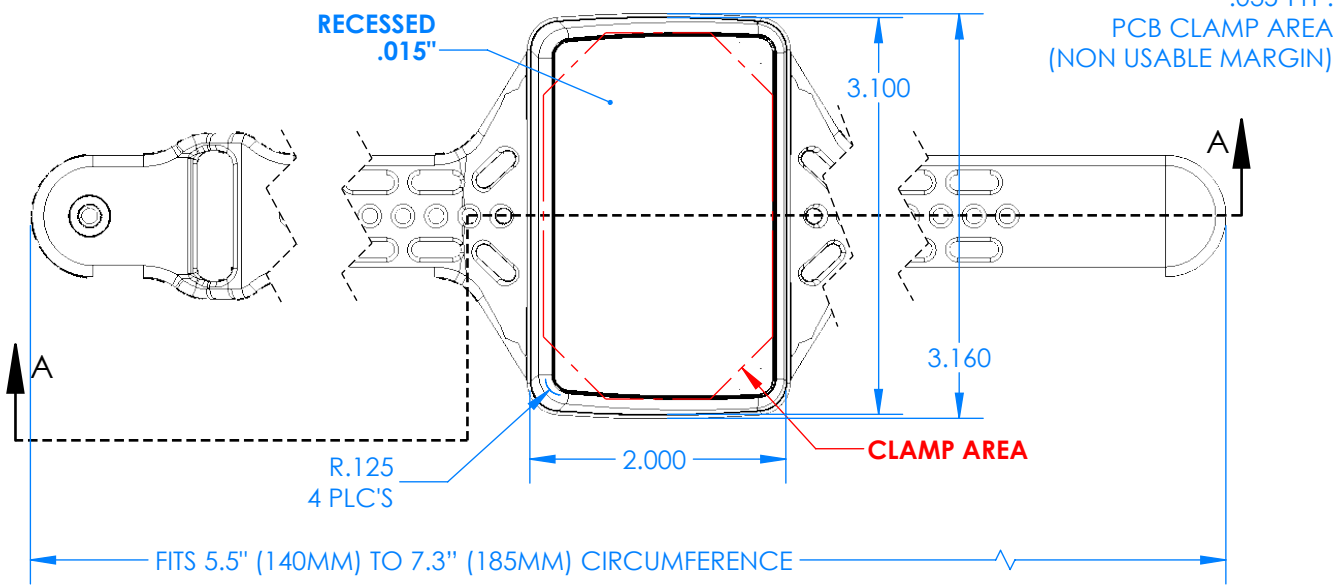

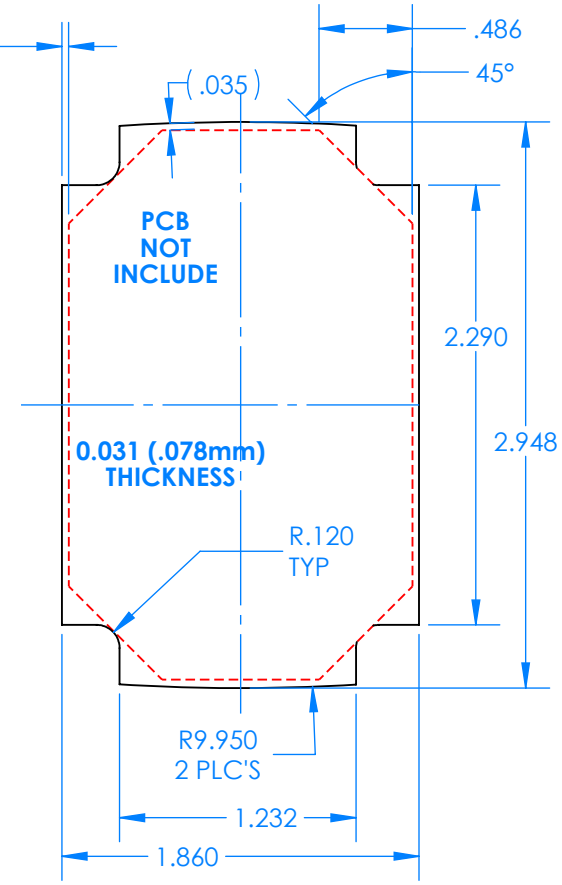

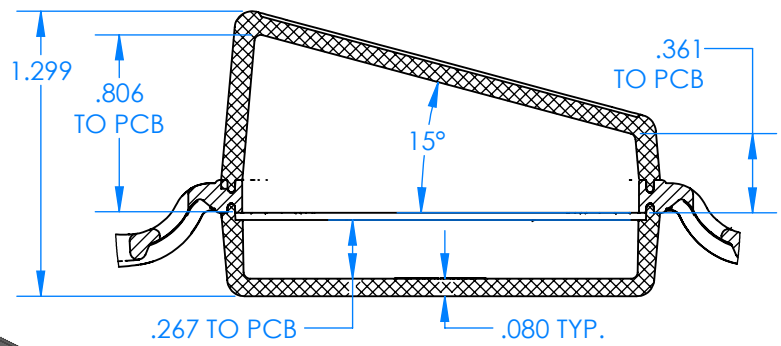

SECTION A-A

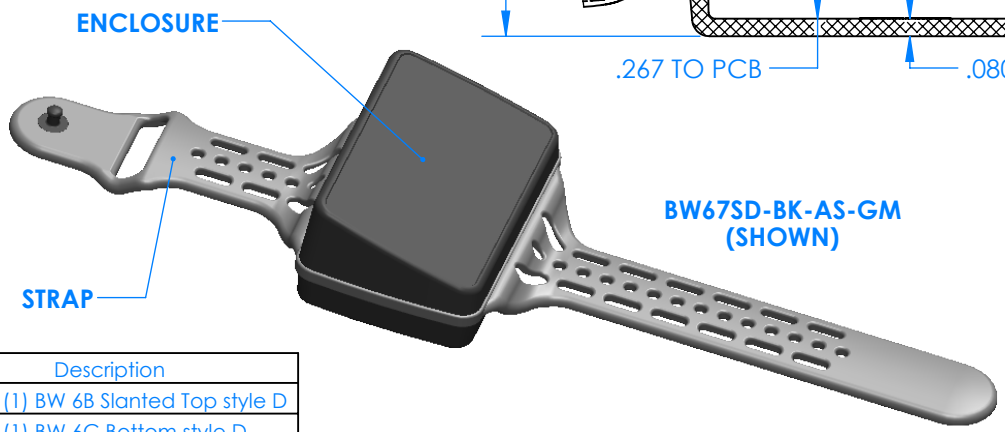

BW67SD-BK-AS-GM (SHOWN)

Enclosure color (YY)

Top-Bottom combinations available

BK=black
CL=clear
TRGY=translucent gray
TRRD=translucent red

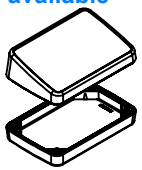

Strap color (ZZ)

BK=black
BL=blue
GM=gunmetal
NG=neon green
NO=neon orange
OR=orange
YL=yellow
WH=white

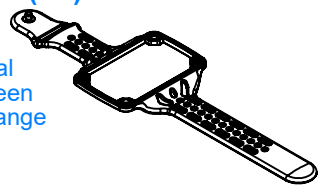

PN	Description
5537D	(1) BW 6B Slanted Top style D
5536D	(1) BW 6C Bottom style D
5538C	(1) BW 6C Small Strap style D
6057	(4) #2 X 3/8" SS PH HD screw TORQUE 35-60 in-oz.

Watertight enclosure meets or exceed:
IP67
NEMA 4

4/17/2025

2009 Wright Ave. La Verne, CA 91750
Ph. (626) 331-0517 Fx. (626) 331-8584 serpac.com

Downloaded from Arrow.com.