Copyright FCI.

FCIconnect.com

PRODUCT NUMBER	PITCH
VFxx72x100J0G	5.00 mm

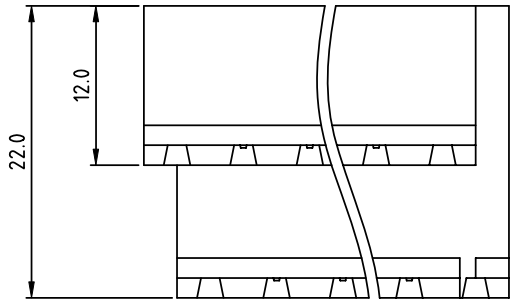

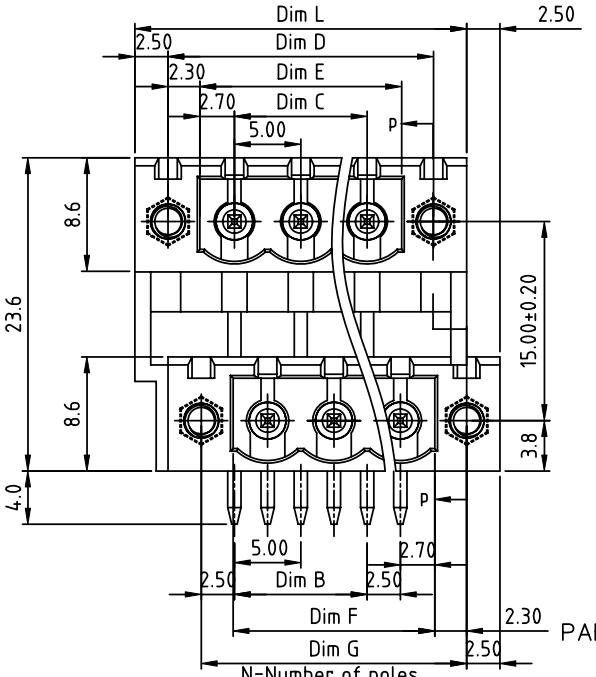

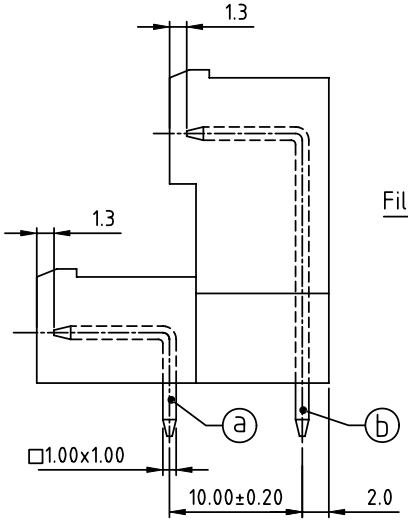

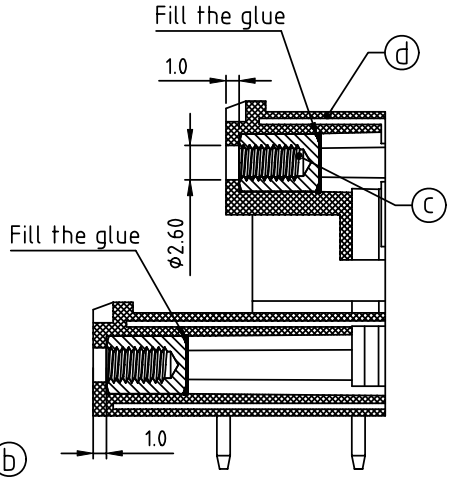

SECTION P-P

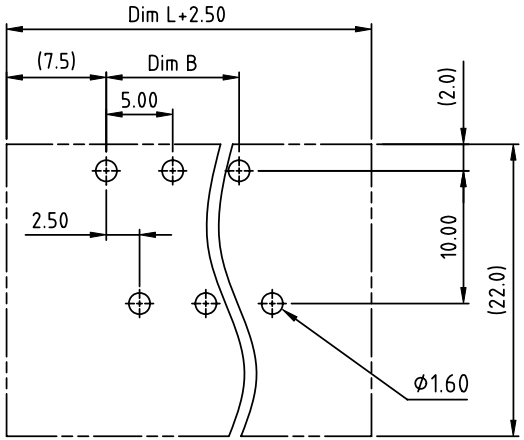

RECOMMENDED P.C.B LAYOUT
TOP VIEW

Material:

- Item ⓐ Short pin: Copper,Tin plated
- Item ⓑ Long pin: Copper,Tin plated
- Item ⓒ With flange nut: brass M2.5
- Item ⓓ Terminal (housing): Thermoplastic (UL94V-0)

Electrical cULus

- Voltage rating: 300VAC
- Current rating: 10A
- Withstanding Voltage: 1.6KV
- Operating temperature: -40°C to +115°C
- Soldering temperature: 260°C±5°C/5 Sec
- Safety Approval: c UL us

PART NO.: VF xx 72 x 1 00J0 G

Solid block
No. of poles
04 2x2poles
06 2x3poles
... ...
48 2x24poles

Color
0 Black (RAL9005)
2 Red (RAL3001/D)
3 Orange(RAL2011/P)
4 Yellow(RAL1018/A)
5 Green(RAL6018/T)
6 Blue (RAL5015/A)
8 Grey(RAL7035/D)
9 White(RAL1102)
C Green(RAL6018/U)

RoHS compliant
(lead<4%)
In copper Alloy

Dimension	
Dim L	(N/2+2)×5.0
Dim B	(N/2-1)×5.0
Dim C	(N/2-1)×5.0
Dim D	(N/2-1)×5.0+10.0
Dim E	(N/2-1)×5.0+5.4
Dim F	(N/2-1)×5.0+5.4
Dim G	(N/2-1)×5.0+10.0

N=Number of poles

Poles	Tolerance
2×2P-2×5P	±0.15
2×6P-2×10P	±0.20
2×11P-2×15P	±0.25
2×16P-2×20P	±0.30
2×21P-2×24P	±0.40

mat'l. code				surface ASME Y14.5	tolerance ASME Y14.5	projection	product family TERMINAL BLOCK
ltr	ecn no	dr	date	tolerances unless otherwise specified			title
				angles	linear X.±0.5 / X.X±0.3 / X.XX±0.1	MM	TERMINAL BLOCK
				X°±1°		scale	PLUGGABLE SOCKET,WITH FLANGE,RIGHT ANGLE
				dr	EVIN ZHONG 042914	FCI	dwg no VFxx72x100J0G sheet 1 of 1 size A4
				engr	EVIN ZHONG 042914		
				chr	HANKE FENG 042914		
				appd	SHI JUN 042914		type CUSTOMER Drawing
sheet index	revision	A					
	sheet	1					

form: A4mmXLc

Downloaded from Arrow.com.