Data Sheet | Item Number: 216-205

Ferrule; Sleeve for 2.08 mm² / AWG 14; insulated; electro-tin plated; yellow

https://www.wago.com/216-205

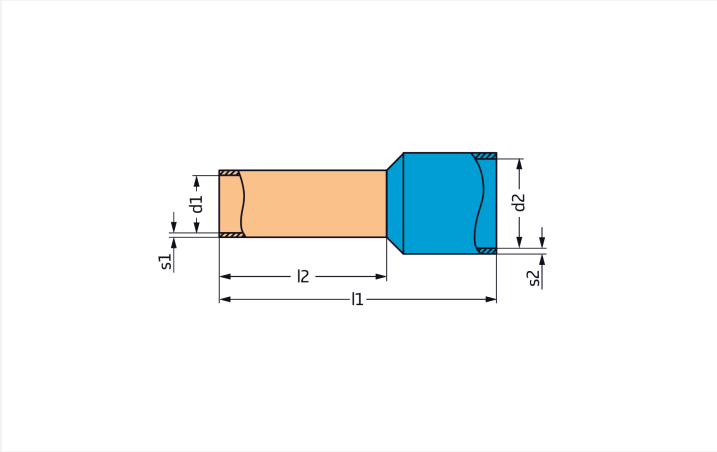

Color: yellow

Dimensions in mm

Connection Data	
Metric cross-section of the ferrule	2.08 mm²
Strip length	10 ... 11 mm / 0.39 ... 0.43 inches
Cross-section (AWG) of ferrule	14 AWG

Physical data	
Total length (L)	14 mm
Wall thickness of crimp sleeve (W2)	0.15 mm
Wall thickness (plastic collar W1)	0.3 mm
Crimp length (length of sleeve L1)	8 mm
Inner diameter of plastic collar (D1)	3.6 mm
Diameter crimp sleeve inside (D2)	2.05 mm

Mechanical data	
Plastic collar	Special design

Material data	
Color	yellow
Fire load	0.002 MJ
Weight	0.1 g

Downloaded from Arrow.com.

Commercial data

Product Group	2 (Terminal Block Accessories)
PU (SPU)	1000 (100) pcs
Packaging type	Box
Country of origin	DE
GTIN	4017332277501
Customs tariff number	85369010000

Product Classification

UNSPSC	39121405
eCl@ss 10.0	27-40-02-01
eCl@ss 9.0	27-40-02-01
ETIM 9.0	EC000005
ETIM 10.0	EC000005
ECCN	NO US CLASSIFICATION

Environmental Product Compliance

RoHS Compliance Status	Compliant,No Exemption

Downloads

Environmental Product Compliance

Compliance Search

Environmental Product Compliance 216-205

Documentation

Bid Text

216-205	19.02.2019	xml 2.80 KB	
216-205	11.09.2017	doc 23.50 KB	

Installation Notes

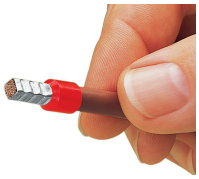

A perfect gas-tight crimp – both electrically and mechanically reliable

Downloaded from Arrow.com.