DO NOT SCALE THIS DRAWING

DRAWING NO: iW-HSKALU-CLASLR-CU02

SHEET 1 OF 1

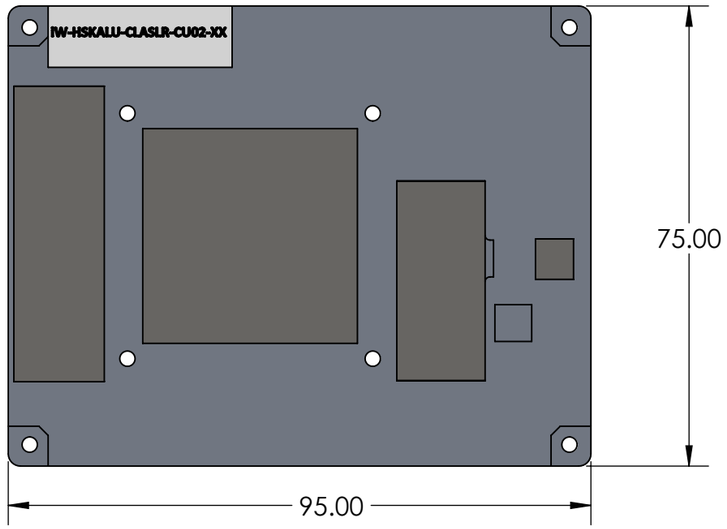

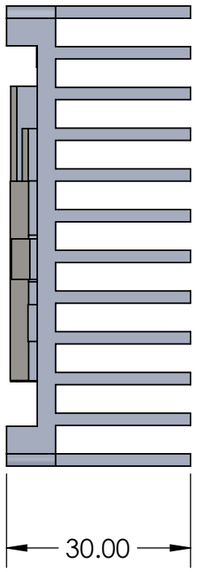

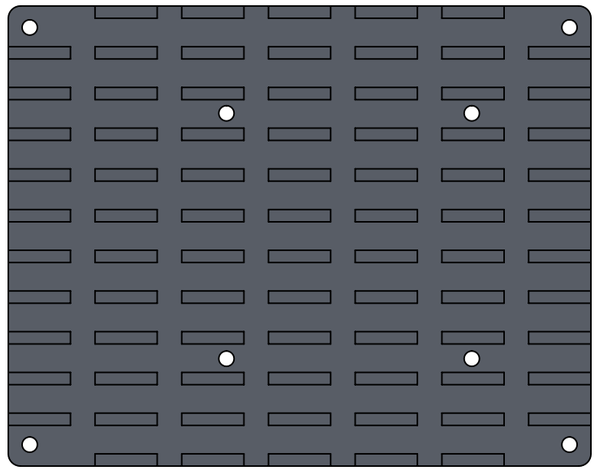

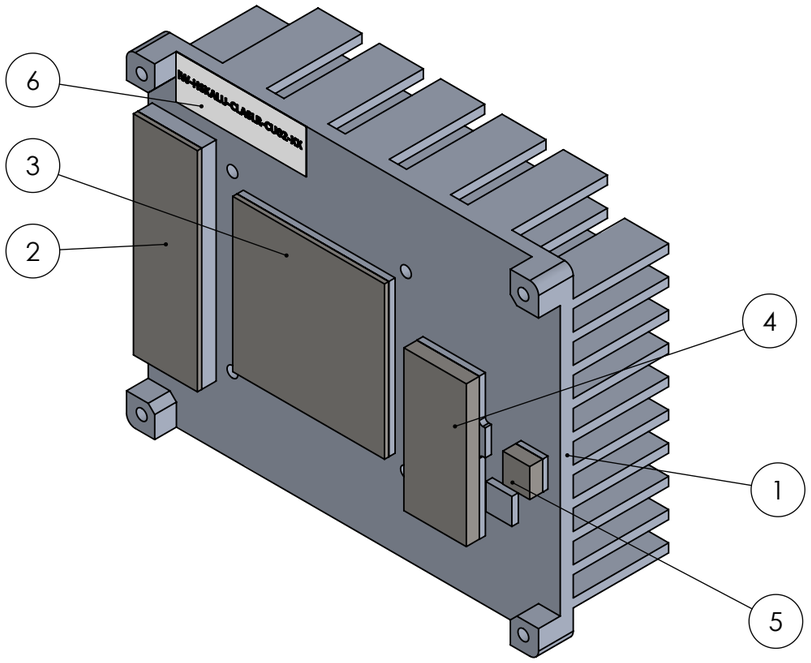

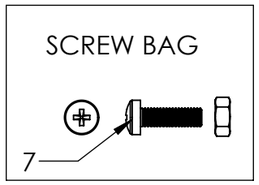

ITEM NO.	PART NUMBER	DESCRIPTION	QTY.
1	iW-PRFAZ-01-MD-R2.0-REL1.0-HEATSINK	HEATSINK	1
2	TG6050-TIM-48x15-1.0	THERMAL PAD 1.0MM	1
3	TG6050-TIM-35x35-1.0	THERMAL PAD 1.0MM	1
4	TG6050-TIM-32.5x14.4-3.0	THERMAL PAD 3 MM	1
5	TG6050-TIM-6.6x6.2-3.0	THERMAL PAD 3.0 MM	1
6	LABEL-30X10	LABEL	1
7	SCREW BAG	M3X 12 PAN HEAD SCREW WITH M3 NUT	4

THRMAL PAD PART NUMBER
TG6050-150-150-XX
XX-THICKNESS

DRAWN BY	GANGADHAR	
CHECKED BY	GANGADHAR	
APPROVED BY	IMMANUEL	

iWave Embedding Intelligence

iWave System Technologies Private Limited,
7/B, 29th Main, BTM Layout, 2nd Stage,
Bangalore-560076, India.

DRAWING NO: iW-HSKALU-CLASLR-CU02

THIS DRAWING SHEET IS PROPERITORY OF iWAVE SYSTEMS TECHNOLOGIES Pvt. Ltd.

MATERIAL : ---- WEIGHT: ---- In grams.

FINISH : ---- SUR AREA: ---- In sqr.mm

TITLE: HEAT SINK ASSEMBLY REV: 1.0 REL: 1.0

DATE : 27/08/2019 SHEET 1 OF 1

NOTES:
ALL DIMENSIONSARE IN MM.
ROUND OFF ALL SHARP EDGES.

SCALE:

GENARALTOLERANCES :
X: ± 0.25
.X: ± 0.1
.XX: ± 0.01

Downloaded from Arrow.com.