COSEL

Power Factor Correction | World wide | Safety Approvals | EMI | Inrush current limiting | OCP | OVP | Remote ON/OFF | Parallel Operation

PDA-series

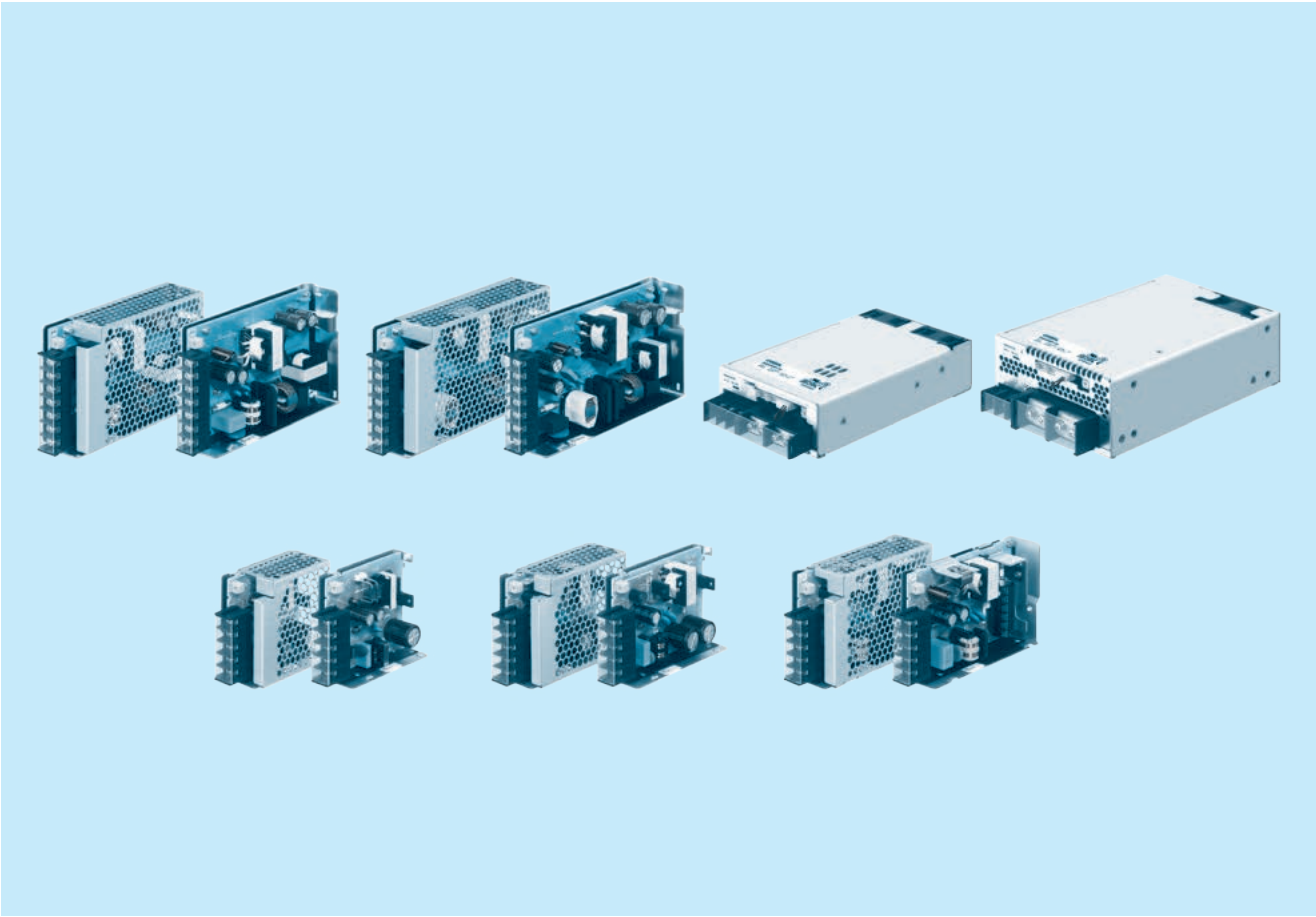

Feature

High efficiency
Low noise
Complies with SEMI F47
Harmonic attenuator (Complies with IEC61000-3-2)
Universal input (85-264VAC)
Built-in inrush current, overcurrent and overvoltage protection circuits
· PDA300F/600F
Parallel Operation / N+1 Parallel Redundancy Operation possible
With various alarms
With AUX output 12V
Output voltage can be varied to near 0V

Safety agency approvals

UL62368-1, C-UL (equivalent to CAN/CSA-C22.2 No.62368-1), EN62368-1
Complies with DEN-AN

5-year warranty (refer to Instruction Manual)

CE marking

Low Voltage Directive
RoHS Directive

UKCA marking

Electrical Equipment Safety Regulations
RoHS Regulations

EMI

Complies with CISPR11-B, CISPR32-B, EN55011-B, EN55032-B, FCC Part 15-B, FCC Part 18-B, VCCI-B

EMS Compliance : EN61204-3, EN61000-6-2

EN61000-4-2
EN61000-4-3
EN61000-4-4
EN61000-4-5
EN61000-4-6
EN61000-4-8
EN61000-4-11

Downloaded from Arrow.com.

COSEL AC-DC Power Supplies Enclosed Type

PDA15F

Ordering information

PD	A	15	F	-□	-□
①	②	③	④	⑤	⑥

RoHS

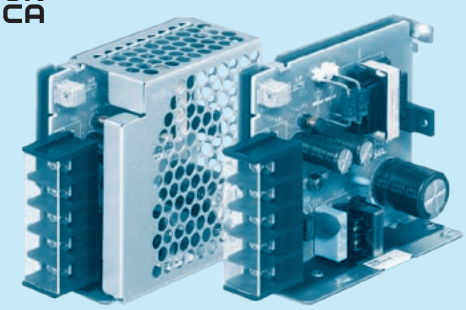

Example recommended EMI/EMC filter
NAC-06-472

High voltage pulse noise type : NAP series
Low leakage current type : NAM series

*A higher current rating EMI/EMC filter may be recommended in view of the other devices that could be connected in parallel with the power supply.

①Series name
②Single output
③Output wattage
④Universal input
⑤Output voltage
⑥Optional *1
C: with Coating
N: with cover

For option details, refer to Instruction Manual 8.1.

*Make sure necessary tests will be carried out on your end equipment with the power supply installed in accordance with any required EMC/EMI regulations.

MODEL		PDA15F-5	PDA15F-12	PDA15F-24
MAX OUTPUT WATTAGE[W]	*2	15	15.6	16.8
DC OUTPUT	*2	5V 3A	12V 1.3A	24V 0.7A

SPECIFICATIONS

	MODEL		PDA15F-5	PDA15F-12	PDA15F-24
INPUT	VOLTAGE[VAC]	*2	85 - 264 1 ϕ (Refer to "Derating" and Instruction Manual 1.1)		
	CURRENT[A]	ACIN 100V	0.35typ		
		ACIN 230V	0.19typ		
	FREQUENCY[Hz]		50 / 60 (45 - 440)		
	EFFICIENCY[%]	ACIN 100V	75.0typ	78.5typ	81.0typ
		ACIN 230V	78.5typ	81.5typ	83.5typ
	INRUSH CURRENT[A]	ACIN 100V	15typ (Io=100%) at cold start		
		ACIN 230V	35typ (Io=100%) at cold start		
	LEAKAGE CURRENT[mA]		0.15 / 0.30max (ACIN 100V / 240V, 60Hz, Io=100%, According to IEC62368-1, and DEN-AN)		
OUTPUT	VOLTAGE[V]		5	12	24
	CURRENT[A]	*2	3.0	1.3	0.7
	LINE REGULATION[mV]	*3	20max	48max	96max
	LOAD REGULATION[mV]	*3	40max	100max	150max
	RIPPLE[mVp-p] *4	0 to +55℃	80max	120max	120max
		-20 to 0℃	140max	160max	160max
		Io=0 to 15%	300max	300max	300max
	RIPPLE NOISE[mVp-p] *4	0 to +55℃	120max	150max	150max
		-20 to 0℃	160max	180max	180max
		Io=0 to 15%	360max	360max	360max
	TEMPERATURE REGULATION[mV]	0 to +55℃	50max	120max	240max
		-20 to +55℃	60max	150max	290max
	DRIFT[mV]	*5	20max	48max	96max
	START-UP TIME[ms]		80typ (ACIN 100V, Io=100%)		
	HOLD-UP TIME[ms]		20typ (ACIN 100V, Io=100%) / 150typ (ACIN 230V, Io=100%)		
	OUTPUT VOLTAGE ADJUSTMENT RANGE[V]		4.50 to 5.50	10.0 to 13.2	19.2 to 27.0
	OUTPUT VOLTAGE SETTING[V]		5.00 to 5.15	12.00 to 12.48	24.00 to 24.96
PROTECTION CIRCUIT AND OTHERS	OVERCURRENT PROTECTION		Works over 105% of rating and recovers automatically		
	OVERVOLTAGE PROTECTION		5.75 to 7.00	15.0 to 18.0	30.0 to 37.0
	REMOTE SENSING		Not provided		
ISOLATION	INPUT-OUTPUT		3,000VAC 1minute, Cutoff current = 10mA, 500VDC 100MΩ min (At Room Temperature)		
	INPUT-FG		2,000VAC 1minute, Cutoff current = 10mA, 500VDC 100MΩ min (At Room Temperature)		
	OUTPUT-FG		500VAC 1minute, Cutoff current = 25mA, 500VDC 100MΩ min (At Room Temperature)		
ENVIRONMENT	OPERATING TEMP.,HUMID.AND ALTITUDE	*2	-20 to +70℃, 20 - 90%RH (Non condensing), 5,000m (16,500feet) max		
	STORAGE TEMP.,HUMID.AND ALTITUDE		-20 to +75℃, 20 - 90%RH (Non condensing), 9,000m (30,000feet) max		
	VIBRATION		10 - 55Hz, 19.6m/s² (2G), 3minutes period, 60minutes each along X, Y and Z axis		
	IMPACT		196.1m/s² (20G), 11ms, once each X, Y and Z axis		
SAFETY AND NOISE REGULATIONS	AGENCY APPROVALS		UL62368-1, C-UL (equivalent to CAN/CSA-C22.2No.62368-1), EN62368-1, Complies with DEN-AN		
	CONDUCTED NOISE		Complies with CISPR11-B, CISPR32-B, EN55011-B, EN55032-B, FCC Part15-B, FCC Part18-B, VCCI-B		
	HARMONIC ATTENUATOR	*6	Complies with IEC61000-3-2 (Class A) (No built-in power factor correction)		
OTHERS	CASE SIZE/WEIGHT		31×78×85mm [1.22×3.07×3.35 inches] (without terminal block) (W×H×D) / 180g max (with cover : 210g max)		
	COOLING METHOD	*2	Convection/Forced air (Requires external fan) (Refer to "Derating")		

*1 The listed options may affect the published standard specifications. Please contact us for detailed product specifications.
*2 Derating is required.Please contact us for DC input.
*3 At low load conditions, the burst mode operation will start. To check load regulation, you will need to measure the characteristics at average mode with instruments.
*4 This is the value that measured on measuring board with capacitor of 22μF at 150mm from output terminal.
Measured by 20MHz oscilloscope or Ripple-Noise meter
(Equivalent to KEISOKU-GIKEN:RM104).
Ripple and ripple noise spec is change at Io=0 to 15% by burst operation.
*5 Drift is the change in DC output for an eight hour period after a half-hour warm-up at 25℃, with the input voltage held constant at the rated input/output.
*6 Please contact us about another class. When two or more units are operating it may not comply with the IEC61000-3-2. Please contact us for details.
* To meet the specification, do not operate overload condition.
* Parallel operation is not possible.
* Sound noise may be generated by power supply in case of pulse load.

Downloaded from Arrow.com.

Block diagram

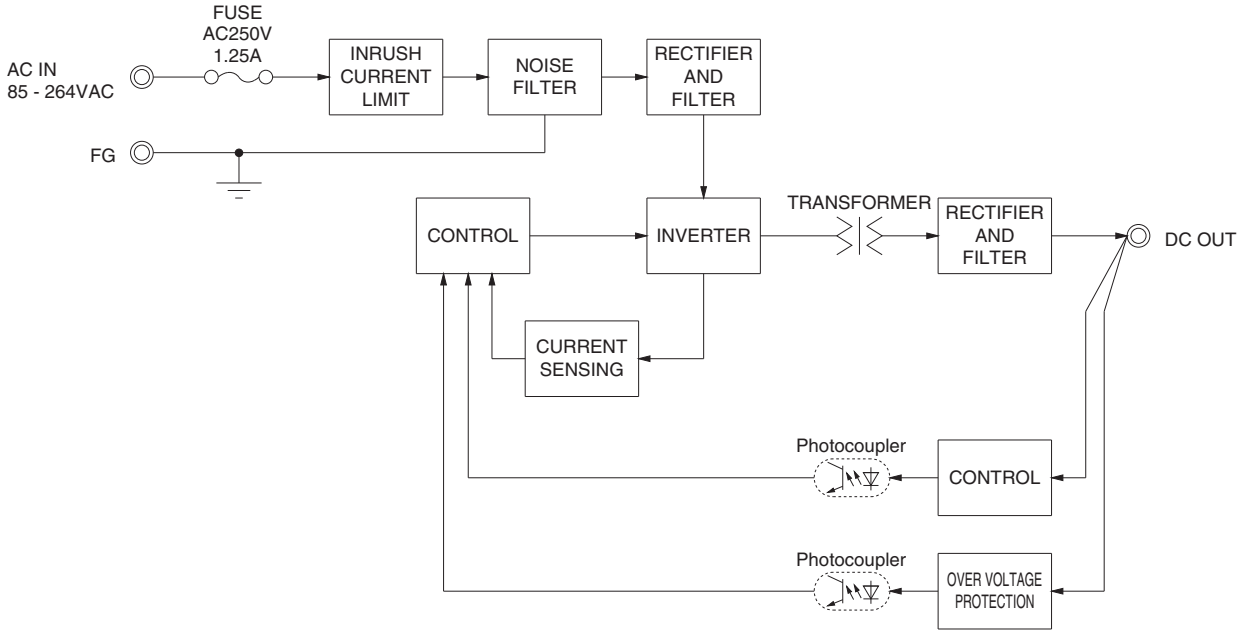

External view

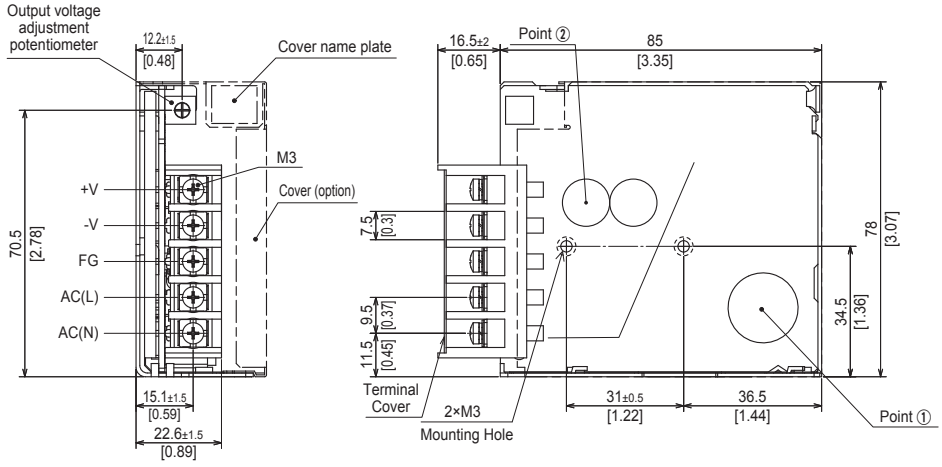

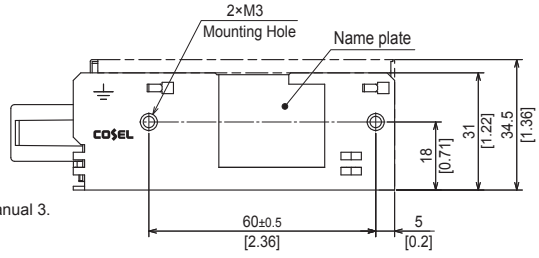

- ✻ Tolerance : ±1 [±0.04]
- ✻ Weight : 180g max (with cover : 210g max)
- ✻ PCB Material / thickness : CEM3 / 1.6mm [0.06]
- ✻ Chassis material : Galvanized steel plate
- ✻ Dimensions in mm, [ ]= inches
- ✻ Mounting torque : 0.6N・m max
- ✻ Screw tightening torque : M3 0.8N・m max
- ✻ Please connect safety ground to the unit in 2-M3 holes
- ✻ Point ①, Point ② are thermometry points. Please refer to Instruction Manual 3.

Downloaded from Arrow.com.

COSEL AC-DC Power Supplies Enclosed Type

PDA30F

Ordering information

PD	A	30	F	-□	-□
①	②	③	④	⑤	⑥

RoHS

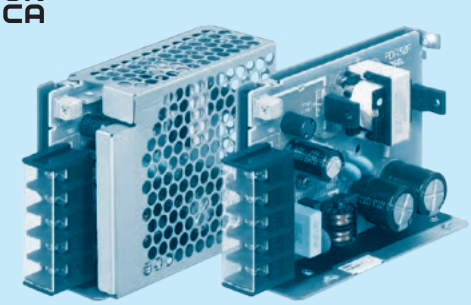

Example recommended EMI/EMC filter
NAC-06-472

High voltage pulse noise type : NAP series
Low leakage current type : NAM series

*A higher current rating EMI/EMC filter may be recommended in view of the other devices that could be connected in parallel with the power supply.

①Series name
②Single output
③Output wattage
④Universal input
⑤Output voltage
⑥Optional *1
C: with Coating
N: with cover

For option details, refer to Instruction Manual 8.1.

*Make sure necessary tests will be carried out on your end equipment with the power supply installed in accordance with any required EMC/EMI regulations.

MODEL		PDA30F-5	PDA30F-12	PDA30F-24
MAX OUTPUT WATTAGE[W]	*2	30	30	31.2
DC OUTPUT	*2	5V 6A	12V 2.5A	24V 1.3A

SPECIFICATIONS

	MODEL		PDA30F-5	PDA30F-12	PDA30F-24
INPUT	VOLTAGE[VAC]	*2	85 - 264 1 ϕ (Refer to "Derating" and Instruction Manual 1.1)		
	CURRENT[A]	ACIN 100V	0.62typ		
		ACIN 230V	0.32typ		
	FREQUENCY[Hz]		50 / 60 (45 - 440)		
	EFFICIENCY[%]	ACIN 100V	83.0typ	82.0typ	83.5typ
		ACIN 230V	87.0typ	85.5typ	86.5typ
	INRUSH CURRENT[A]	ACIN 100V	15typ (Io=100%) at cold start		
		ACIN 230V	35typ (Io=100%) at cold start		
	LEAKAGE CURRENT[mA]		0.25 / 0.55 max (ACIN 100V / 240V, 60Hz, Io=100%, According to IEC62368-1, and DEN-AN)		
OUTPUT	VOLTAGE[V]		5	12	24
	CURRENT[A]	*2	6.0	2.5	1.3
	LINE REGULATION[mV]	*3	20max	48max	96max
	LOAD REGULATION[mV]	*3	40max	100max	150max
	RIPPLE[mVp-p] *4	0 to +55℃	80max	120max	120max
		-20 to 0℃	140max	160max	160max
		Io=0 to 15%	300max	300max	300max
	RIPPLE NOISE[mVp-p] *4	0 to +55℃	120max	150max	150max
		-20 to 0℃	160max	180max	180max
		Io=0 to 15%	360max	360max	360max
	TEMPERATURE REGULATION[mV]	0 to +55℃	50max	120max	240max
		-20 to +55℃	60max	150max	290max
	DRIFT[mV]	*5	20max	48max	96max
	START-UP TIME[ms]		80typ (ACIN 100V, Io=100%)		
	HOLD-UP TIME[ms]		20typ (ACIN 100V, Io=100%) / 150typ (ACIN 230V, Io=100%)		
	OUTPUT VOLTAGE ADJUSTMENT RANGE[V]		4.50 to 5.50	10.0 to 13.2	20.4 to 27.0
	OUTPUT VOLTAGE SETTING[V]		5.00 to 5.15	12.00 to 12.48	24.00 to 24.96
PROTECTION CIRCUIT AND OTHERS	OVERCURRENT PROTECTION		Works over 105% of rating and recovers automatically		
	OVERVOLTAGE PROTECTION		5.75 to 7.00	15.0 to 18.0	30.0 to 37.0
	REMOTE SENSING		Not provided		
ISOLATION	INPUT-OUTPUT		3,000VAC 1minute, Cutoff current = 10mA, 500VDC 100MΩ min (At Room Temperature)		
	INPUT-FG		2,000VAC 1minute, Cutoff current = 10mA, 500VDC 100MΩ min (At Room Temperature)		
	OUTPUT-FG		500VAC 1minute, Cutoff current = 25mA, 500VDC 100MΩ min (At Room Temperature)		
ENVIRONMENT	OPERATING TEMP.,HUMID.AND ALTITUDE	*2	-20 to +70℃, 20 - 90%RH (Non condensing), 5,000m (16,500feet) max		
	STORAGE TEMP.,HUMID.AND ALTITUDE		-20 to +75℃, 20 - 90%RH (Non condensing), 9,000m (30,000feet) max		
	VIBRATION		10 - 55Hz, 19.6m/s² (2G), 3minutes period, 60minutes each along X, Y and Z axis		
	IMPACT		196.1m/s² (20G), 11ms, once each X, Y and Z axis		
SAFETY AND NOISE REGULATIONS	AGENCY APPROVALS		UL62368-1, C-UL (equivalent to CAN/CSA-C22.2No.62368-1), EN62368-1, Complies with DEN-AN		
	CONDUCTED NOISE		Complies with CISPR11-B, CISPR32-B, EN55011-B, EN55032-B, FCC Part15-B, FCC Part18-B, VCCI-B		
	HARMONIC ATTENUATOR	*6	Complies with IEC61000-3-2 (Class A) (No built-in power factor correction)		
OTHERS	CASE SIZE/WEIGHT		31×78×103mm [1.22×3.07×4.06 inches] (without terminal block) (W×H×D) / 250g max (with cover : 280g max)		
	COOLING METHOD	*2	Convection/Forced air (Requires external fan) (Refer to "Derating")		

*1 The listed options may affect the published standard specifications. Please contact us for detailed product specifications.
*2 Derating is required.Please contact us for DC input.
*3 At low load conditions, the burst mode operation will start. To check load regulation, you will need to measure the characteristics at average mode with instruments.
*4 This is the value that measured on measuring board with capacitor of 22μF at 150mm from output terminal.
Measured by 20MHz oscilloscope or Ripple-Noise meter
(Equivalent to KEISOKU-GIKEN:RM104).
Ripple and ripple noise spec is change at Io=0 to 15% by burst operation.
*5 Drift is the change in DC output for an eight hour period after a half-hour warm-up at 25℃, with the input voltage held constant at the rated input/output.
*6 Please contact us about another class. When two or more units are operating it may not comply with the IEC61000-3-2. Please contact us for details.
* To meet the specification, do not operate overload condition.
* Parallel operation is not possible.
* Sound noise may be generated by power supply in case of pulse load.

Downloaded from Arrow.com.

Block diagram

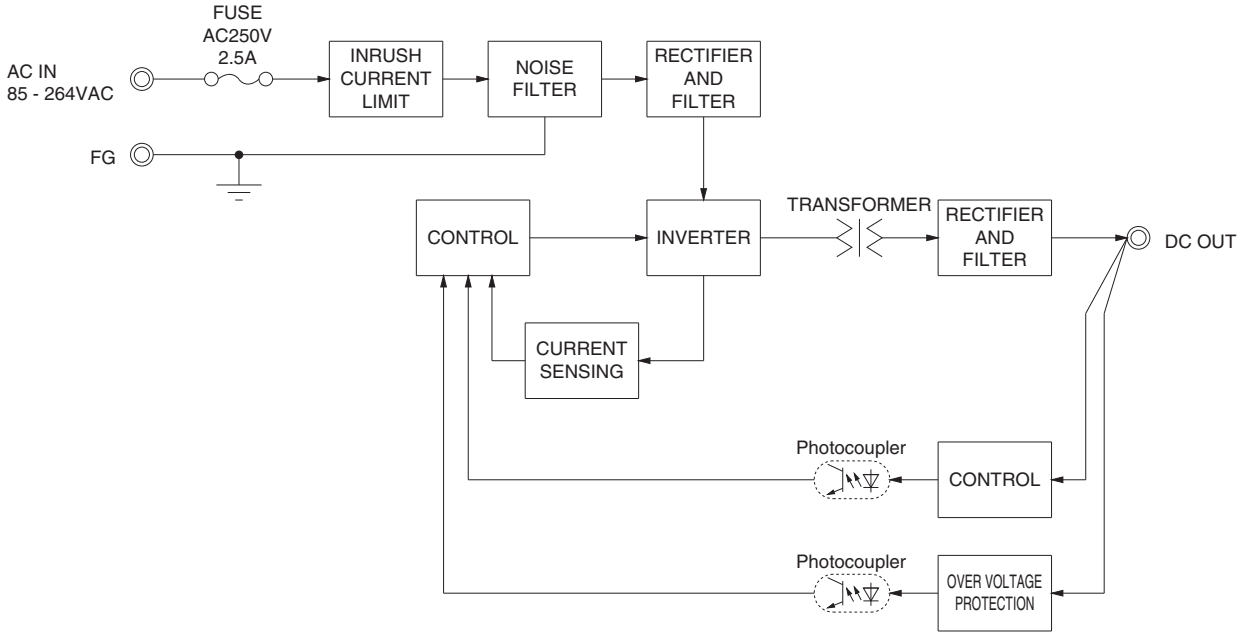

External view

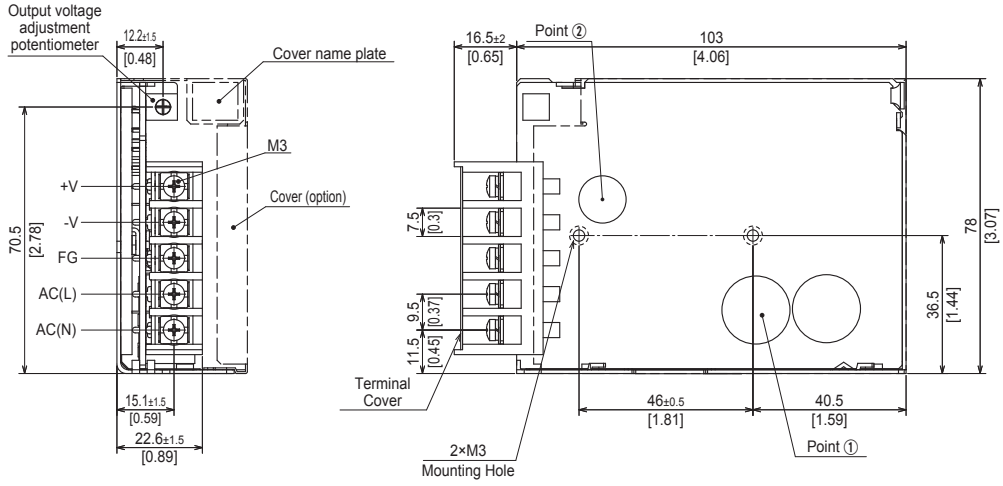

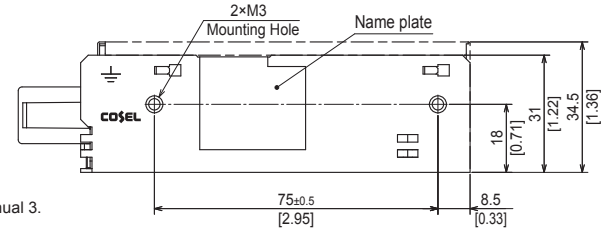

- ✻ Tolerance : ±1 [±0.04]
- ✻ Weight : 250g max (with cover : 280g max)
- ✻ PCB Material / thickness : CEM3 / 1.6mm [0.06]
- ✻ Chassis material : Galvanized steel plate
- ✻ Dimensions in mm, [ ]= inches
- ✻ Mounting torque : 0.6N・m max
- ✻ Screw tightening torque : M3 0.8N・m max
- ✻ Please connect safety ground to the unit in 2-M3 holes
- ✻ Point ①, Point ② are thermometry points. Please refer to Instruction Manual 3.

Downloaded from Arrow.com.

COSEL AC-DC Power Supplies Enclosed Type

PDA50F

Ordering information

PD	A	50	F	-□	-□
①	②	③	④	⑤	⑥

RoHS

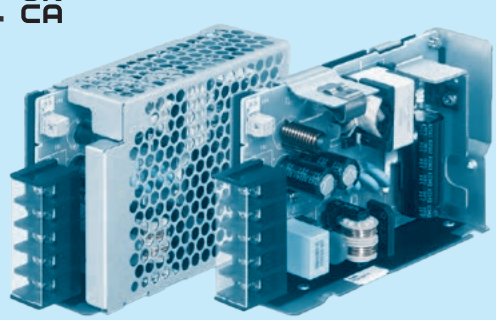

Example recommended EMI/EMC filter
NAC-06-472

High voltage pulse noise type : NAP series
Low leakage current type : NAM series

*A higher current rating EMI/EMC filter may be recommended in view of the other devices that could be connected in parallel with the power supply.

①Series name
②Single output
③Output wattage
④Universal input
⑤Output voltage
⑥Optional *1
C: with Coating
N: with cover

For option details, refer to Instruction Manual 8.1.

*Make sure necessary tests will be carried out on your end equipment with the power supply installed in accordance with any required EMC/EMI regulations.

MODEL		PDA50F-5	PDA50F-12	PDA50F-24
MAX OUTPUT WATTAGE[W]	*2	50	51.6	52.8
DC OUTPUT	*2	5V 10A	12V 4.3A	24V 2.2A

SPECIFICATIONS

	MODEL		PDA50F-5	PDA50F-12	PDA50F-24
INPUT	VOLTAGE[VAC]	*2	85 - 264 1 ϕ (Refer to Instruction Manual 1.1)		
	CURRENT[A]	ACIN 100V	1.05typ		
		ACIN 230V	0.52typ		
	FREQUENCY[Hz]		50 / 60 (45 - 440)		
	EFFICIENCY[%]	ACIN 100V	81.5typ	82.5typ	85.0typ
		ACIN 230V	85.0typ	85.0typ	87.5typ
	INRUSH CURRENT[A]	ACIN 100V	15typ (Io=100%) at cold start		
		ACIN 230V	35typ (Io=100%) at cold start		
	LEAKAGE CURRENT[mA]		0.3 / 0.65 max (ACIN 100V / 240V, 60Hz, Io=100%, According to IEC62368-1, and DEN-AN)		
OUTPUT	VOLTAGE[V]		5	12	24
	CURRENT[A]	*2	10	4.3	2.2
	LINE REGULATION[mV]	*3	20max	48max	96max
	LOAD REGULATION[mV]	*3	40max	100max	150max
	RIPPLE[mVp-p] *4	0 to +50℃	80max	120max	120max
		-20 to 0℃	140max	160max	160max
		Io=0 to 15%	300max	300max	300max
	RIPPLE NOISE[mVp-p] *4	0 to +50℃	120max	150max	150max
		-20 to 0℃	160max	180max	180max
		Io=0 to 15%	360max	360max	360max
	TEMPERATURE REGULATION[mV]	0 to +50℃	50max	120max	240max
		-20 to +50℃	60max	150max	290max
	DRIFT[mV]	*5	20max	48max	96max
	START-UP TIME[ms]		80typ (ACIN 100V, Io=100%)		
	HOLD-UP TIME[ms]		20typ (ACIN 100V, Io=100%) / 140typ (ACIN 230V, Io=100%)		
	OUTPUT VOLTAGE ADJUSTMENT RANGE[V]		4.00 to 5.50	10.0 to 13.2	19.2 to 27.0
	OUTPUT VOLTAGE SETTING[V]		5.00 to 5.15	12.00 to 12.48	24.00 to 24.96
PROTECTION CIRCUIT AND OTHERS	OVERCURRENT PROTECTION		Works over 105% of rating and recovers automatically		
	OVERVOLTAGE PROTECTION		5.75 to 7.00	15.0 to 18.0	30.0 to 37.0
	REMOTE SENSING		Not provided		
ISOLATION	INPUT-OUTPUT		3,000VAC 1minute, Cutoff current = 10mA, 500VDC 100MΩ min (At Room Temperature)		
	INPUT-FG		2,000VAC 1minute, Cutoff current = 10mA, 500VDC 100MΩ min (At Room Temperature)		
	OUTPUT-FG		500VAC 1minute, Cutoff current = 25mA, 500VDC 100MΩ min (At Room Temperature)		
ENVIRONMENT	OPERATING TEMP.,HUMID.AND ALTITUDE	*2	-20 to +70℃, 20 - 90%RH (Non condensing), 5,000m (16,500feet) max		
	STORAGE TEMP.,HUMID.AND ALTITUDE		-20 to +75℃, 20 - 90%RH (Non condensing), 9,000m (30,000feet) max		
	VIBRATION		10 - 55Hz, 19.6m/s² (2G), 3minutes period, 60minutes each along X, Y and Z axis		
	IMPACT		196.1m/s² (20G), 11ms, once each X, Y and Z axis		
SAFETY AND NOISE REGULATIONS	AGENCY APPROVALS		UL62368-1, C-UL (equivalent to CAN/CSA-C22.2No.62368-1), EN62368-1, Complies with DEN-AN		
	CONDUCTED NOISE		Complies with CISPR11-B, CISPR32-B, EN55011-B, EN55032-B, FCC Part15-B, FCC Part18-B, VCCI-B		
	HARMONIC ATTENUATOR	*6	Complies with IEC61000-3-2 (Class A) (No built-in power factor correction)		
OTHERS	CASE SIZE/WEIGHT		31×82×120mm [1.22×3.23×4.72 inches] (without terminal block) (W×H×D) / 330g max (with cover : 370g max)		
	COOLING METHOD	*2	Convection/Forced air (Requires external fan) (Refer to "Derating")		

*1 The listed options may affect the published standard specifications. Please contact us for detailed product specifications.
*2 Derating is required.Please contact us for DC input.
*3 At low load conditions, the burst mode operation will start. To check load regulation, you will need to measure the characteristics at average mode with instruments.
*4 This is the value that measured on measuring board with capacitor of 22μF at 150mm from output terminal.
Measured by 20MHz oscilloscope or Ripple-Noise meter
(Equivalent to KEISOKU-GIKEN:RM104).
Ripple and ripple noise spec is change at Io=0 to 15% by burst operation.
*5 Drift is the change in DC output for an eight hour period after a half-hour warm-up at 25℃, with the input voltage held constant at the rated input/output.
*6 Please contact us about another class. When two or more units are operating it may not comply with the IEC61000-3-2. Please contact us for details.
* To meet the specification, do not operate overload condition.
* Parallel operation is not possible.
* Sound noise may be generated by power supply in case of pulse load.

Downloaded from Arrow.com.

Block diagram

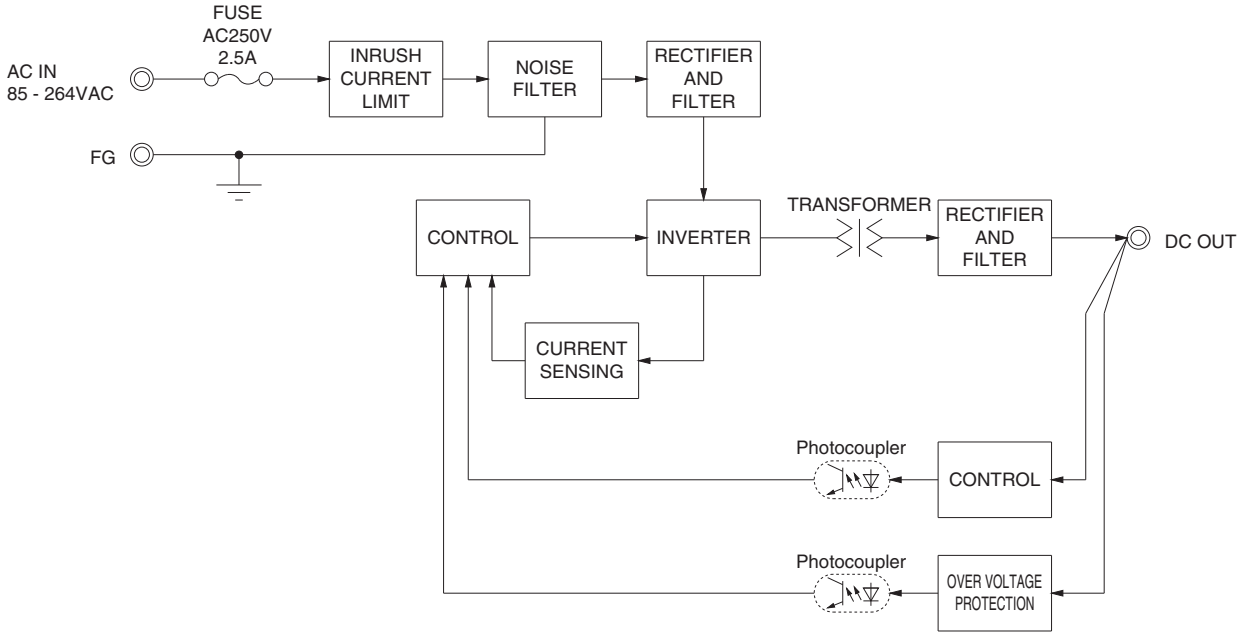

External view

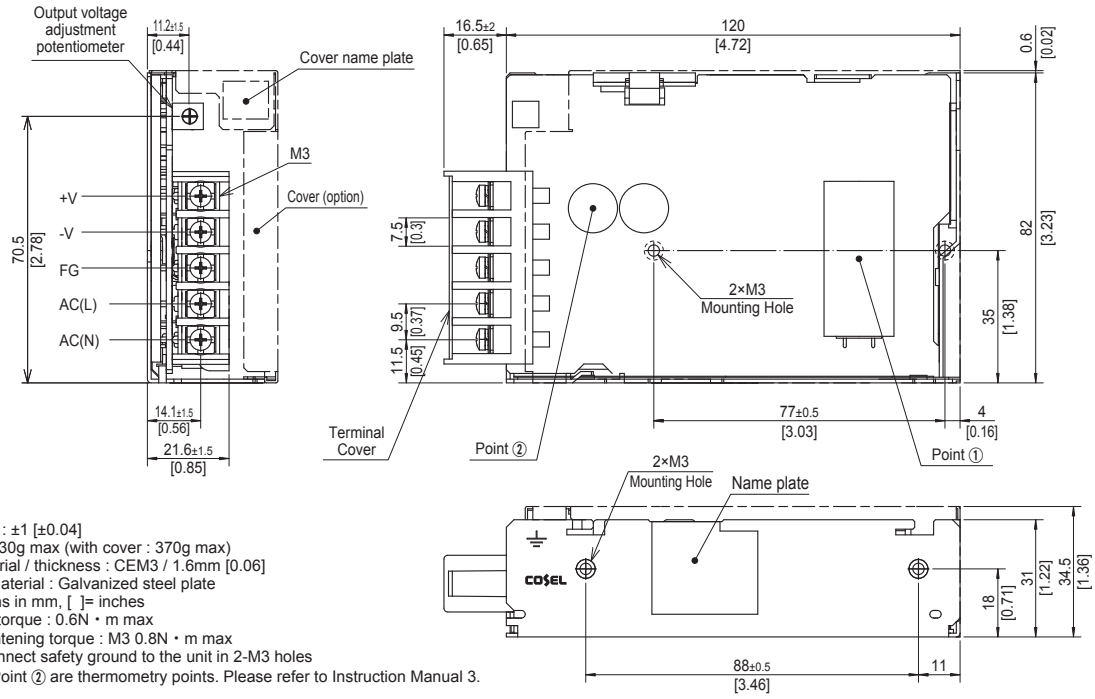

- ✻ Tolerance : ±1 [±0.04]
- ✻ Weight : 330g max (with cover : 370g max)
- ✻ PCB Material / thickness : CEM3 / 1.6mm [0.06]
- ✻ Chassis material : Galvanized steel plate
- ✻ Dimensions in mm, [ ]= inches
- ✻ Mounting torque : 0.6N・m max
- ✻ Screw tightening torque : M3 0.8N・m max
- ✻ Please connect safety ground to the unit in 2-M3 holes
- ✻ Point ①, Point ② are thermometry points. Please refer to Instruction Manual 3.

Downloaded from Arrow.com.

COSEL AC-DC Power Supplies Enclosed Type

PDA100F

Ordering information

PD	A	100	F	-□	-□
①	②	③	④	⑤	⑥

c UL us D CE UK CA RoHS

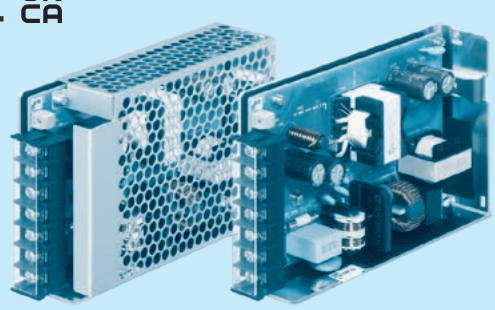

Example recommended EMI/EMC filter
NAC-06-472

High voltage pulse noise type : NAP series
Low leakage current type : NAM series

*A higher current rating EMI/EMC filter may be recommended in view of the other devices that could be connected in parallel with the power supply.

①Series name
②Single output
③Output wattage
④Universal input
⑤Output voltage
⑥Optional *1
C: with Coating
N: with cover

For option details, refer to Instruction Manual 8.1.

*Make sure necessary tests will be carried out on your end equipment with the power supply installed in accordance with any required EMC/EMI regulations.

MODEL	PDA100F-5	PDA100F-12	PDA100F-15	PDA100F-24
MAX OUTPUT WATTAGE[W] *2	100	102	105	108
DC OUTPUT *2	5V 20A	12V 8.5A	15V 7A	24V 4.5A

SPECIFICATIONS

	MODEL		PDA100F-5	PDA100F-12	PDA100F-15	PDA100F-24
INPUT	VOLTAGE[VAC] *2		85 - 264 1 ϕ (Refer to Instruction Manual 1.1)			
	CURRENT[A]	ACIN 100V	1.3typ			
		ACIN 230V	0.6typ			
	FREQUENCY[Hz]		50 / 60 (45 - 66)			
	EFFICIENCY[%]	ACIN 100V	87.0typ	88.5typ	88.5typ	87.5typ
		ACIN 230V	89.5typ	91.0typ	91.0typ	89.5typ
	POWER FACTOR (Io=100%)	ACIN 100V	0.97typ			
		ACIN 230V	0.87typ			
	INRUSH CURRENT[A]	ACIN 100V	15typ (Io=100%) at cold start			
		ACIN 230V	35typ (Io=100%) at cold start			
	LEAKAGE CURRENT[mA]		0.4 / 0.75 max (ACIN 100V / 240V, 60Hz, Io=100%, According to IEC62368-1, and DEN-AN)			
OUTPUT	VOLTAGE[V]		5	12	15	24
	CURRENT[A] *2		20	8.5	7	4.5
	LINE REGULATION[mV] *3		20max	48max	60max	96max
	LOAD REGULATION[mV] *3		40max	100max	120max	150max
	RIPPLE[mVp-p] *4	0 to +50℃	80max	120max	120max	120max
		-20 to 0℃	140max	160max	160max	160max
		Io=0 to 15%	300max	360max	500max	500max
	RIPPLE NOISE[mVp-p] *4	0 to +50℃	120max	150max	150max	150max
		-20 to 0℃	160max	180max	180max	180max
		Io=0 to 15%	360max	400max	600max	600max
	TEMPERATURE REGULATION[mV]	0 to +50℃	50max	120max	150max	240max
		-20 to +50℃	60max	150max	180max	290max
	DRIFT[mV] *5		20max	48max	60max	96max
	START-UP TIME[ms]		100typ (ACIN 100V, Io=100%)			
	HOLD-UP TIME[ms]		20typ (ACIN 100V, Io=100%)			
	OUTPUT VOLTAGE ADJUSTMENT RANGE[V]		4.00 to 5.50	10.00 to 13.20	13.20 to 18.00	19.20 to 27.00
	OUTPUT VOLTAGE SETTING[V]		5.00 to 5.15	12.00 to 12.48	15.00 to 15.60	24.00 to 24.96
PROTECTION CIRCUIT AND OTHERS	OVERCURRENT PROTECTION		Works over 105% of rating and recovers automatically			
	OVERVOLTAGE PROTECTION		5.75 to 7.00	15.00 to 18.00	20.00 to 25.00	30.00 to 37.00
	REMOTE SENSING		Not provided			
ISOLATION	INPUT-OUTPUT		3,000VAC 1minute, Cutoff current = 10mA, 500VDC 100MΩ min (At Room Temperature)			
	INPUT-FG		2,000VAC 1minute, Cutoff current = 10mA, 500VDC 100MΩ min (At Room Temperature)			
	OUTPUT-FG		500VAC 1minute, Cutoff current = 25mA, 500VDC 100MΩ min (At Room Temperature)			
ENVIRONMENT	OPERATING TEMPERATURE,HUMID *2		-20 to +70℃, 20 - 90%RH (Non condensing)			
	STORAGE TEMPERATURE,HUMID		-20 to +75℃, 20 - 90%RH (Non condensing)			
	VIBRATION		10 - 55Hz, 19.6m/s² (2G), 3minutes period, 60minutes each along X, Y and Z axis			
	IMPACT		196.1m/s² (20G), 11ms, once each X, Y and Z axis			
SAFETY AND NOISE REGULATIONS	AGENCY APPROVALS		UL62368-1, C-UL (equivalent to CAN/CSA-C22.2No.62368-1), EN62368-1, Complies with DEN-AN			
	CONDUCTED NOISE		Complies with CISPR11-B, CISPR32-B, EN55011-B, EN55032-B, FCC Part15-B, FCC Part18-B, VCCI-B			
	HARMONIC ATTENUATOR *6		Complies with IEC61000-3-2 (Class A)			
OTHERS	CASE SIZE/WEIGHT		32×93×147mm [1.26×3.66×5.79 inches] (without terminal block) (W×H×D) / 440g max (with cover : 500g max)			
	COOLING METHOD *2		Convection/Forced air (Refer to "Derating")			

*1 The listed options may affect the published standard specifications. Please contact us for detailed product specifications.
*2 Derating is required.Please contact us for DC input.
*3 At low load conditions, the burst mode operation will start. To check load regulation, you will need to measure the characteristics at average mode with instruments.
*4 This is the value that measured on measuring board with capacitor of 22μF at 150mm from output terminal.
Measured by 20MHz oscilloscope or Ripple-Noise meter
(Equivalent to KEISOKU-GIKEN:RM104).
Ripple and ripple noise spec is change at Io=0 to 15% by burst operation.
*5 Drift is the change in DC output for an eight hour period after a half-hour warm-up at 25℃, with the input voltage held constant at the rated input/output.
*6 Please contact us about another class. When two or more units are operating it may not comply with the IEC61000-3-2. Please contact us for details.
* To meet the specification, do not operate overload condition.
* Parallel operation is not possible.
* Sound noise may be generated by power supply in case of pulse load.

Downloaded from Arrow.com.

Block diagram

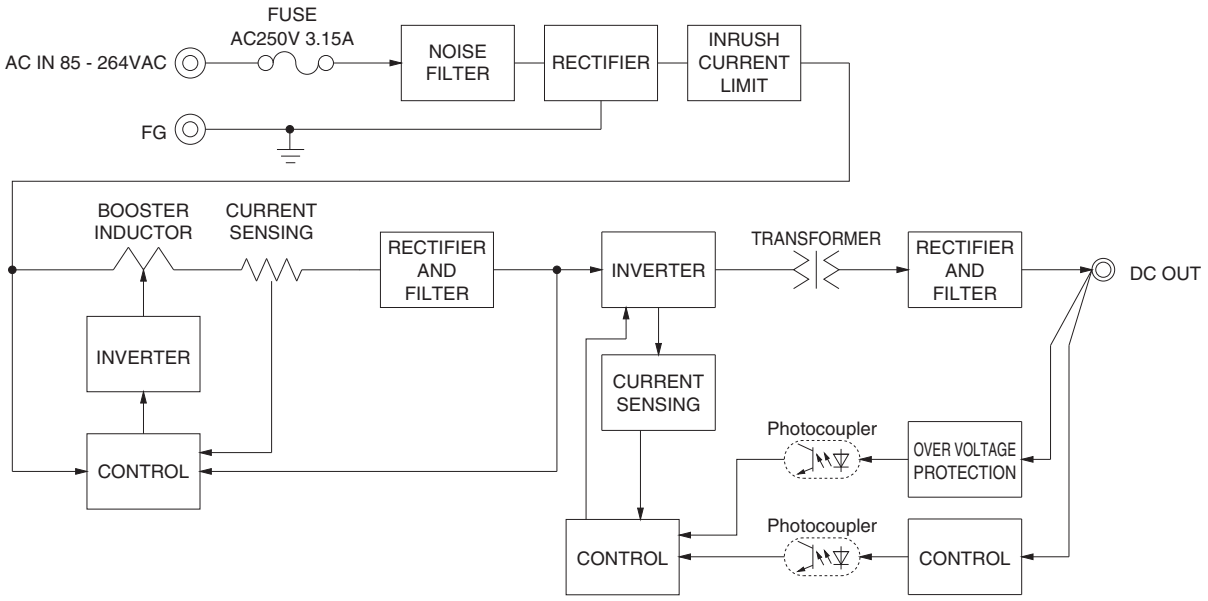

External view

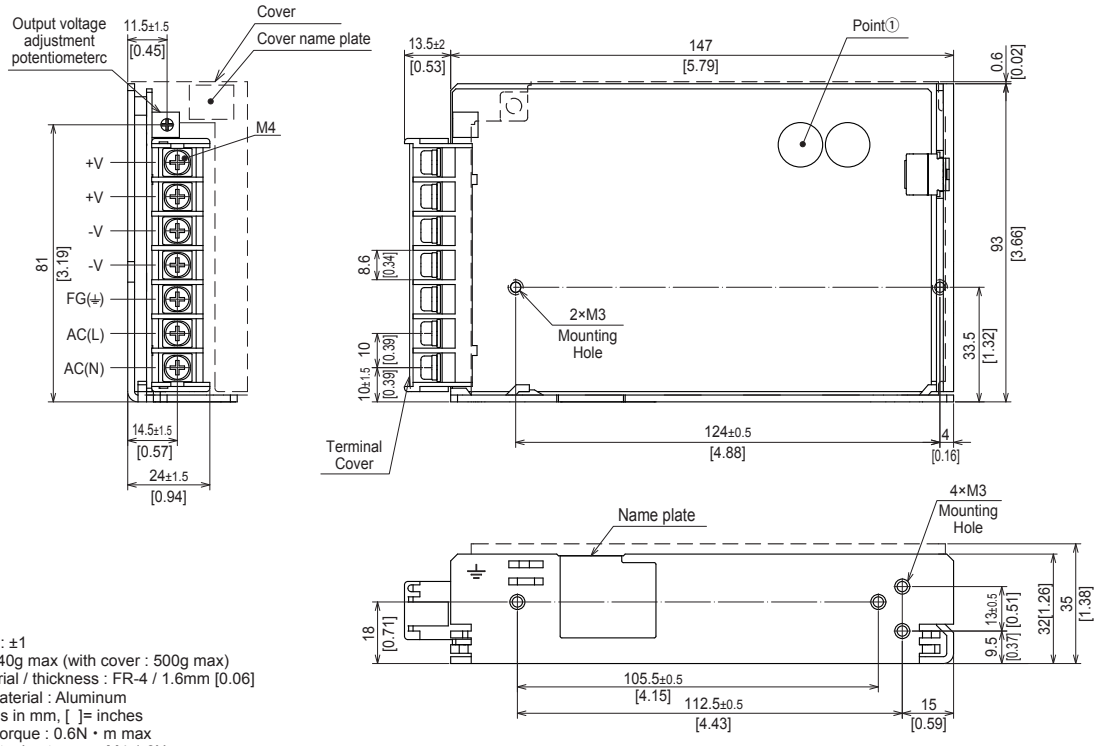

* Tolerance : ±1
* Weight : 440g max (with cover : 500g max)
* PCB Material / thickness : FR-4 / 1.6mm [0.06]
* Chassis material : Aluminum
* Dimensions in mm, [ ]= inches
* Mounting torque : 0.6N・m max
* Screw tightening torque : M4 1.6N・m max
* Please connect safety ground to the FG terminal on the unit.
* Point ① is the thermometry points. Please refer to Instruction Manual 3.

Downloaded from Arrow.com.

COSEL AC-DC Power Supplies Enclosed Type

PDA150F

Ordering information

PD	A	150	F	-□	-□
①	②	③	④	⑤	⑥

RoHS

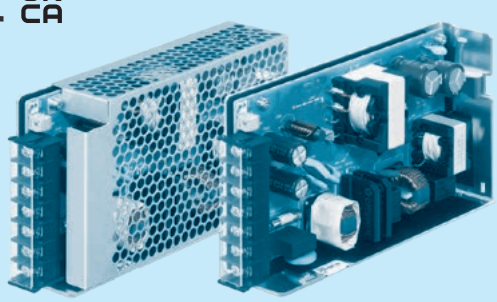

Example recommended EMI/EMC filter
NAC-06-472

High voltage pulse noise type : NAP series
Low leakage current type : NAM series

*A higher current rating EMI/EMC filter may be recommended in view of the other devices that could be connected in parallel with the power supply.

①Series name
②Single output
③Output wattage
④Universal input
⑤Output voltage
⑥Optional *1
C: with Coating
N: with cover

For option details, refer to Instruction Manual 8.1.

*Make sure necessary tests will be carried out on your end equipment with the power supply installed in accordance with any required EMC/EMI regulations.

MODEL	PDA150F-5	PDA150F-12	PDA150F-15	PDA150F-24
MAX OUTPUT WATTAGE[W] *2	150	156	150	156
DC OUTPUT *2	5V 30A	12V 13A	15V 10A	24V 6.5A

SPECIFICATIONS

	MODEL		PDA150F-5	PDA150F-12	PDA150F-15	PDA150F-24
INPUT	VOLTAGE[VAC] *2		85 - 264 1 ϕ (Refer to Instruction Manual 1.1)			
	CURRENT[A]	ACIN 100V	1.8typ			
		ACIN 230V	0.9typ			
	FREQUENCY[Hz]		50 / 60 (45 - 66)			
	EFFICIENCY[%]	ACIN 100V	85.0typ	87.0typ	88.5typ	87.0typ
		ACIN 230V	87.5typ	89.0typ	89.5typ	89.0typ
	POWER FACTOR (Io=100%)	ACIN 100V	0.97typ			
		ACIN 230V	0.87typ			
	INRUSH CURRENT[A]	ACIN 100V	15typ (Io=100%) at cold start			
		ACIN 230V	35typ (Io=100%) at cold start			
	LEAKAGE CURRENT[mA]		0.4 / 0.75 max (ACIN 100V / 240V, 60Hz, Io=100%, According to IEC62368-1, and DEN-AN)			
OUTPUT	VOLTAGE[V]		5	12	15	24
	CURRENT[A]		30	13	10	6.5
	LINE REGULATION[mV] *3		20max	48max	60max	96max
	LOAD REGULATION[mV] *3		40max	100max	120max	150max
	RIPPLE[mVp-p] *4	0 to +50℃	80max	120max	120max	120max
		-20 to 0℃	140max	160max	160max	160max
		Io=0 to 15%	300max	360max	500max	500max
	RIPPLE NOISE[mVp-p] *4	0 to +50℃	120max	150max	150max	150max
		-20 to 0℃	160max	180max	180max	180max
		Io=0 to 15%	360max	400max	600max	600max
	TEMPERATURE REGULATION[mV]	0 to +50℃	50max	120max	150max	240max
		-20 to +50℃	60max	150max	180max	290max
	DRIFT[mV] *5		20max	48max	60max	96max
	START-UP TIME[ms]		120typ (ACIN 100V, Io=100%)			
	HOLD-UP TIME[ms]		20typ (ACIN 100V, Io=100%)			
	OUTPUT VOLTAGE ADJUSTMENT RANGE[V]		4.00 to 5.50	10.00 to 13.20	13.20 to 18.00	19.20 to 27.00
	OUTPUT VOLTAGE SETTING[V]		5.00 to 5.15	12.00 to 12.48	15.00 to 15.60	24.00 to 24.96
PROTECTION CIRCUIT AND OTHERS	OVERCURRENT PROTECTION		Works over 105% of rating and recovers automatically			
	OVERVOLTAGE PROTECTION		5.75 to 7.00	15.00 to 18.00	20.00 to 25.00	30.00 to 37.00
	REMOTE SENSING		Not provided			
ISOLATION	INPUT-OUTPUT		3,000VAC 1minute, Cutoff current = 10mA, 500VDC 100MΩ min (At Room Temperature)			
	INPUT-FG		2,000VAC 1minute, Cutoff current = 10mA, 500VDC 100MΩ min (At Room Temperature)			
	OUTPUT-FG		500VAC 1minute, Cutoff current = 25mA, 500VDC 100MΩ min (At Room Temperature)			
ENVIRONMENT	OPERATING TEMPERATURE,HUMID *2		-20 to +70℃, 20 - 90%RH (Non condensing)			
	STORAGE TEMPERATURE,HUMID		-20 to +75℃, 20 - 90%RH (Non condensing)			
	VIBRATION		10 - 55Hz, 19.6m/s² (2G), 3minutes period, 60minutes each along X, Y and Z axis			
	IMPACT		196.1m/s² (20G), 11ms, once each X, Y and Z axis			
SAFETY AND NOISE REGULATIONS	AGENCY APPROVALS		UL62368-1, C-UL (equivalent to CAN/CSA-C22.2No.62368-1), EN62368-1, Complies with DEN-AN			
	CONDUCTED NOISE		Complies with CISPR11-B, CISPR32-B, EN55011-B, EN55032-B, FCC Part15-B, FCC Part18-B, VCCI-B			
	HARMONIC ATTENUATOR *6		Complies with IEC61000-3-2 (Class A)			
OTHERS	CASE SIZE/WEIGHT		34×93×168mm [1.34×3.66×6.61 inches] (without terminal block) (W×H×D) / 530g max (with cover : 600g max)			
	COOLING METHOD *2		Convection/Forced air (Refer to "Derating")			

*1 The listed options may affect the published standard specifications. Please contact us for detailed product specifications.
*2 Derating is required.Please contact us for DC input.
*3 At low load conditions, the burst mode operation will start. To check load regulation, you will need to measure the characteristics at average mode with instruments.
*4 This is the value that measured on measuring board with capacitor of 22μF at 150mm from output terminal.
Measured by 20MHz oscilloscope or Ripple-Noise meter
(Equivalent to KEISOKU-GIKEN:RM104).
Ripple and ripple noise spec is change at Io=0 to 15% by burst operation.
*5 Drift is the change in DC output for an eight hour period after a half-hour warm-up at 25℃, with the input voltage held constant at the rated input/output.
*6 Please contact us about another class. When two or more units are operating it may not comply with the IEC61000-3-2. Please contact us for details.
* To meet the specification, do not operate overload condition.
* Parallel operation is not possible.
* Sound noise may be generated by power supply in case of pulse load.

Downloaded from Arrow.com.

Block diagram

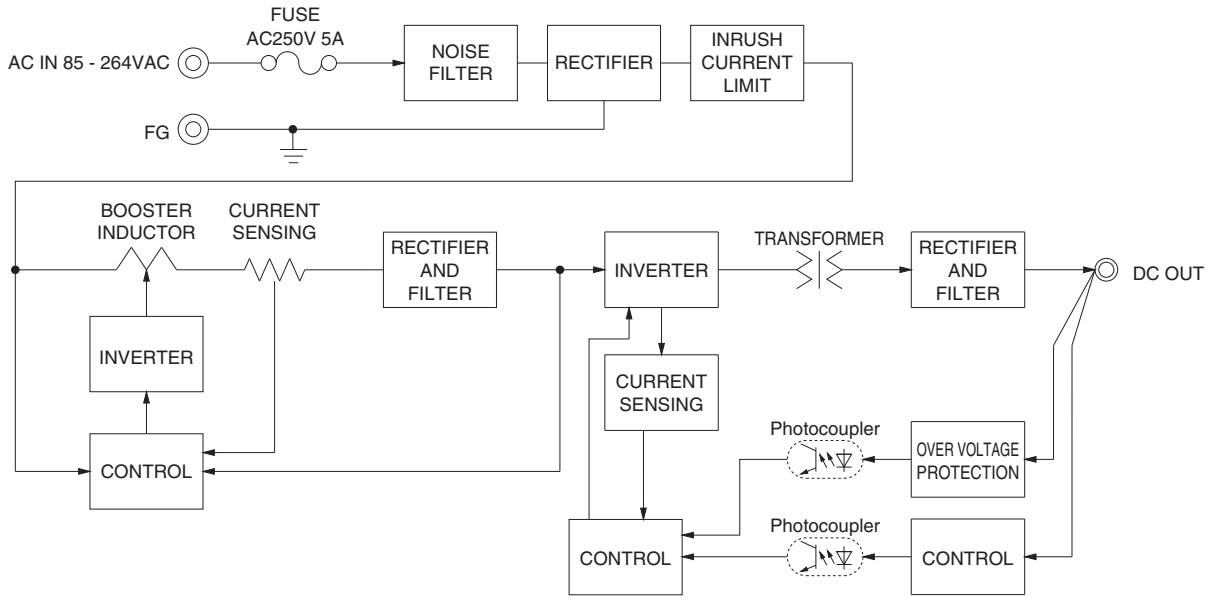

External view

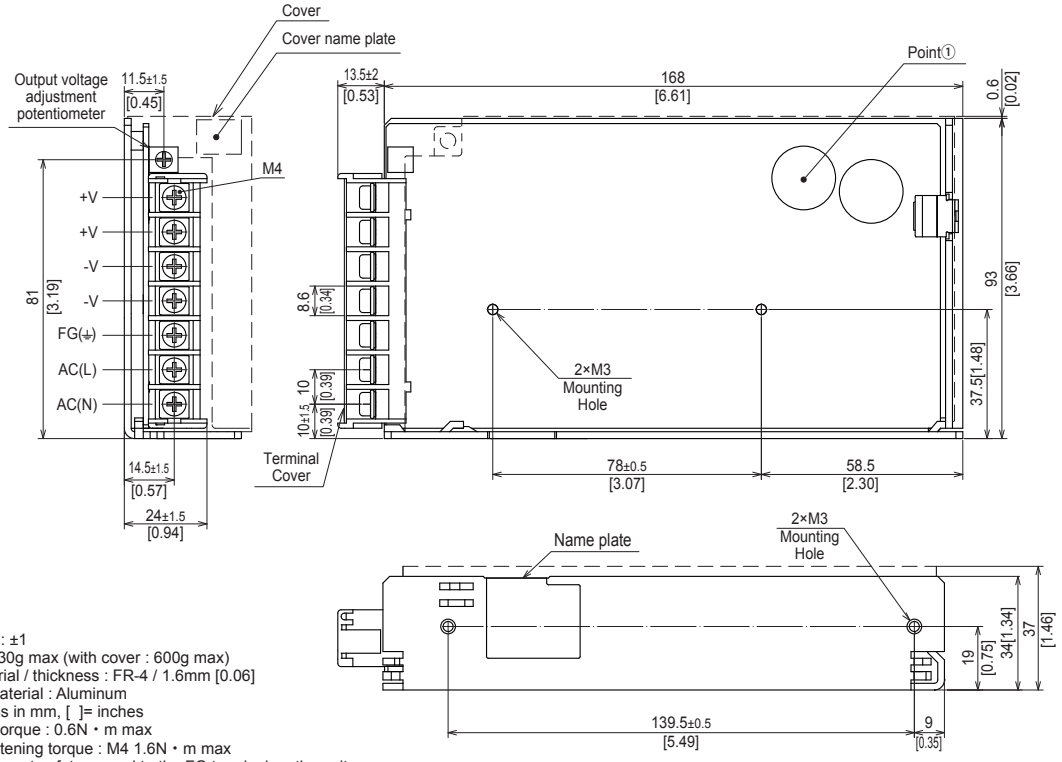

- ∗ Tolerance : ±1
- ∗ Weight : 530g max (with cover : 600g max)
- ∗ PCB Material / thickness : FR-4 / 1.6mm [0.06]
- ∗ Chassis material : Aluminum
- ∗ Dimensions in mm, [ ]= inches
- ∗ Mounting torque : 0.6N・m max
- ∗ Screw tightening torque : M4 1.6N・m max
- ∗ Please connect safety ground to the FG terminal on the unit.
- ∗ Keep drawing current per pin below 20A for TB1.
- ∗ Point ① is the thermometry points. Please refer to Instruction Manual 3.

Downloaded from Arrow.com.

COSEL AC-DC Power Supplies Enclosed Type

PDA300F

Ordering information

PD	A	300	F	-□
①	②	③	④	⑤

①Series name
②Single output
③Output wattage
④Universal input
⑤Output voltage

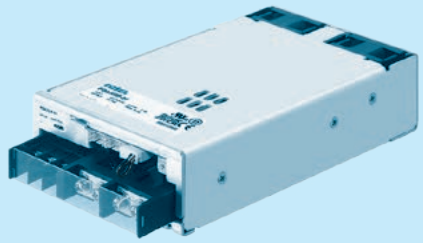

Example recommended EMI/EMC filter
NAC-06-472

High voltage pulse noise type : NAP series
Low leakage current type : NAM series

*A higher current rating EMI/EMC filter may be recommended in view of the other devices that could be connected in parallel with the power supply.

MODEL		PDA300F-12	PDA300F-15	PDA300F-24	PDA300F-36	PDA300F-48
MAX OUTPUT WATTAGE[W] *1		324	330	336	324	336
DC OUTPUT *1	ACIN 100V	12V 27A	15V 22A	24V 14A	36V 9A	48V 7A
	ACIN 230V *2	12V 27A	15V 22A	24V 14 (16.5) A	36V 9A	48V 7A

SPECIFICATIONS

	MODEL		PDA300F-12	PDA300F-15	PDA300F-24	PDA300F-36	PDA300F-48
INPUT	VOLTAGE[VAC] *1		85 - 264 1φ (Refer to Instruction Manual 1.1)				
	CURRENT[A]	ACIN 100V	4.1typ				
		ACIN 230V	1.9typ				
	FREQUENCY[Hz]		50 / 60 (45-66)				
	EFFICIENCY[%]	ACIN 100V	79.0typ	80.5typ	82.0typ	81.0typ	82.5typ
		ACIN 230V	82.0typ	84.0typ	84.5typ	84.5typ	86.0typ
	POWER FACTOR (Io=100%)	ACIN 100V	0.99typ				
		ACIN 230V	0.95typ				
	INRUSH CURRENT[A]	ACIN 100V	20typ (Io=100%) at cold start				
		ACIN 230V	40typ (Io=100%) at cold start				
	LEAKAGE CURRENT[mA]		0.4 / 0.75 max (ACIN 100V / 240V, 60Hz, Io=100%, According to IEC62368-1, and DEN-AN)				
OUTPUT	VOLTAGE[V]		12	15	24	36	48
	CURRENT[A] *2	ACIN 100V	27	22	14	9	7
		ACIN 230V	27	22	14 (16.5)	9	7
	LINE REGULATION[mV]		48max	60max	96max	144max	192max
	LOAD REGULATION[mV]		100max	120max	150max	150max	300max
	RIPPLE[mVp-p] *3	0 to +50℃	120max	120max	120max	150max	150max
		-20 to 0℃	160max	160max	160max	160max	400max
	RIPPLE NOISE[mVp-p] *3	0 to +50℃	150max	150max	150max	200max	200max
		-20 to 0℃	180max	180max	180max	240max	500max
	TEMPERATURE REGULATION[mV]	0 to +50℃	120max	150max	240max	360max	480max
		-20 to +50℃	180max	180max	290max	440max	600max
	DRIFT[mV] *4		48max	60max	96max	144max	192max
	START-UP TIME[ms]		300typ (ACIN 100V, Io=100%)				
	HOLD-UP TIME[ms]		35typ (ACIN 100V, Io=100%)				
	OUTPUT VOLTAGE ADJUSTMENT RANGE[V]		8.25 to 13.20	10.50 to 16.50	16.50 to 26.40	25.20 to 39.60	38.40 to 56.00
	OUTPUT VOLTAGE SETTING[V]		12.00 to 12.48	15.00 to 15.60	24.00 to 24.96	36.00 to 37.44	48.00 to 49.92
PROTECTION CIRCUIT AND OTHERS	OVERCURRENT PROTECTION		Works over 105% of rating and recovers automatically				
	OVERVOLTAGE PROTECTION[V]		14.4 to 18.6	18.0 to 23.3	28.8 to 37.2	43.2 to 54.0	57.6 to 80.0
	REMOTE SENSING		Provided				
	REMOTE ON/OFF		Provided				
ISOLATION	INPUT-OUTPUT-RC		3,000VAC 1minute, Cutoff current = 10mA, 500VDC 100MΩmin (At Room Temperature)				
	INPUT-FG		2,000VAC 1minute, Cutoff current = 10mA, 500VDC 100MΩmin (At Room Temperature)				
	OUTPUT・RC・AUX-FG		500VAC 1minute, Cutoff current = 100mA, 500VDC 100MΩmin (At Room Temperature)				
	OUTPUT-RC-AUX		500VAC 1minute, Cutoff current = 100mA, 500VDC 100MΩ min (At Room Temperature)				
ENVIRONMENT	OPERATING TEMP.,HUMID.AND ALTITUDE *1		-20 to +70℃ (Refer to "Derating"), 20 - 90%RH (Non condensing)				
	STORAGE TEMP.,HUMID.AND ALTITUDE		-20 to +75℃, 20 - 90%RH (Non condensing)				
	VIBRATION		10 - 55Hz, 19.6m/s² (2G), 3minutes period, 60minutes each along X, Y and Z axis				
	IMPACT		196.1m/s² (20G), 11ms, once each X, Y and Z axis				
SAFETY AND NOISE REGULATIONS	AGENCY APPROVALS (At only AC input)		UL62368-1, C-UL (equivalent to CAN/CSA-C22.2No.62368-1), EN62368-1, Complies with DEN-AN				
	CONDUCTED NOISE		Complies with CISPR11-B, CISPR32-B, EN55011-B, EN55032-B, FCC Part15-B, FCC Part18-B, VCCI-B				
	HARMONIC ATTENUATOR *5		Complies with IEC61000-3-2 (Class A)				
OTHERS	CASE SIZE/WEIGHT		102×42×170mm [4.02×1.65×6.69 inches] (without terminal block and screw) (W×H×D) /1.0kg max				
	COOLING METHOD *1		Forced cooling (internal fan)				

*1 Derating is required. Please contact us for DC input.
*2 ( ) means peak current. Peak loading for 10s. And Duty 35% max, refer to Instruction manual in detail.
*3 This is the value measured on measuring board with capacitor of 22μF within 150mm from output terminal.
Measured by 20MHz Oscilloscope or Ripple-Noise meter (Equivalent to KEISOKU-GIKEN : RM-104).
*4 Drift is the change in DC output for an eight hour period after a half-hour warm-up at 25℃, with the input voltage held constant at the rated input/output.
*5 Please contact us about another class. When two or more units are operating it may not comply with the IEC61000-3-2. Please contact us for details.
* To meet the specification, do not operate overload condition.
* Sound noise may be generated by power supply in case of pulse load.

Downloaded from Arrow.com.

Block diagram

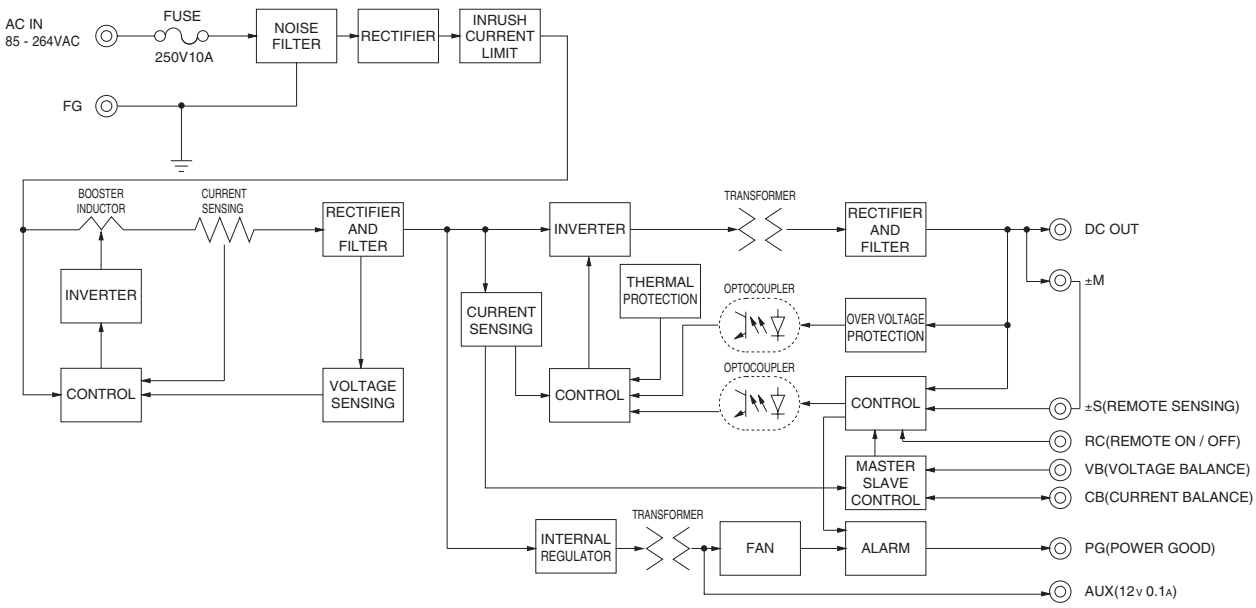

External view

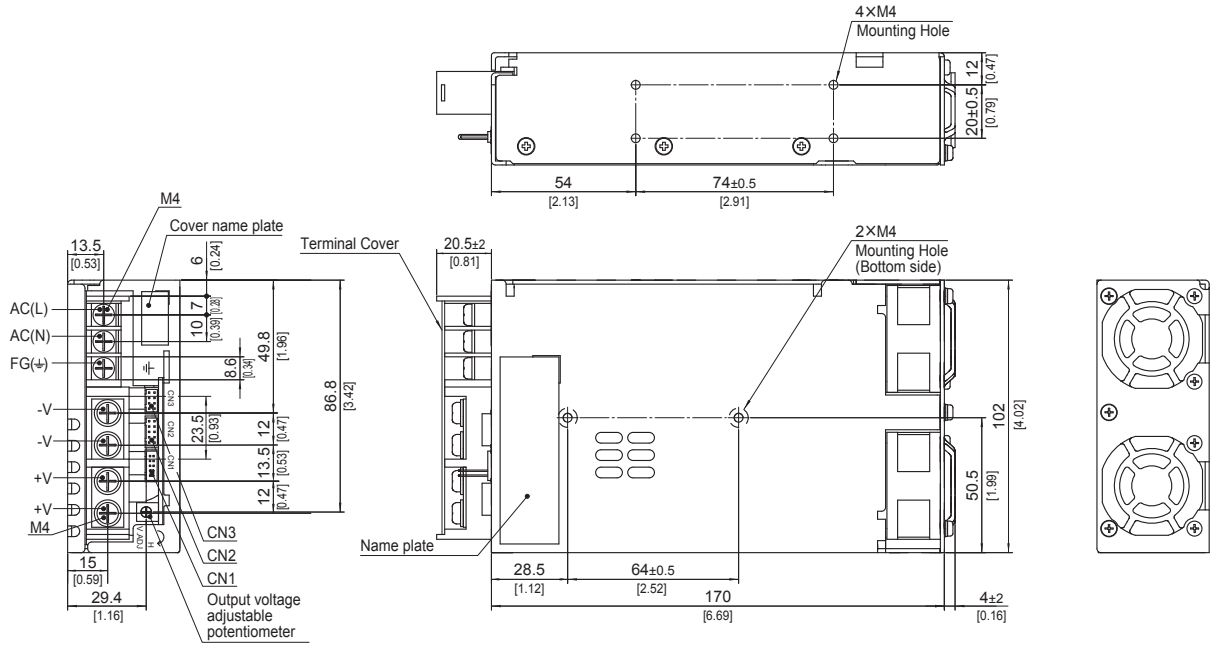

- ∗ Dimensions in mm, [ ]=inches
- ∗ Tolerance :±1 [±0.04]
- ∗ Weight : 1.0kg max
- ∗ PCB Material/thickness : FR-4/1.6mm [0.06]
- ∗ Chassis material : Aluminum
- ∗ Mounting torque : 1.2N • m max
- ∗ Screw tightening torque : M4 : 1.6N • m max
- ∗ The housing for the remote sensing unused is mounted on CN1
- ∗ Please connect safety ground to FG terminal on the unit

Downloaded from Arrow.com.

COSEL AC-DC Power Supplies Enclosed Type

PDA600F

Ordering information

PD	A	600	F	-□
①	②	③	④	⑤

①Series name
②Single output
③Output wattage
④Universal input
⑤Output voltage

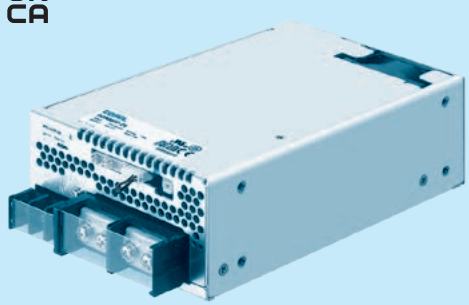

Example recommended EMI/EMC filter
NAC-10-472

High voltage pulse noise type : NAP series
Low leakage current type : NAM series

*A higher current rating EMI/EMC filter may be recommended in view of the other devices that could be connected in parallel with the power supply.

MODEL		PDA600F-12	PDA600F-15	PDA600F-24	PDA600F-36	PDA600F-48
MAX OUTPUT WATTAGE[W] *1		636	645	648	648	624
DC OUTPUT *1	ACIN 100V	12V 53A	15V 43A	24V 27A	36V 18A	48V 13A
	ACIN 230V *2	12V 53A	15V 43A	24V 27(31)A	36V 18A	48V 13A

SPECIFICATIONS

	MODEL		PDA600F-12	PDA600F-15	PDA600F-24	PDA600F-36	PDA600F-48
INPUT	VOLTAGE[VAC] *1		85 - 264 1φ (Refer to Instruction Manual 1.1)				
	CURRENT[A]	ACIN 100V	7.9typ				
		ACIN 230V	3.4typ				
	FREQUENCY[Hz]		50 / 60 (45-66)				
	EFFICIENCY[%]	ACIN 100V	83.0typ	83.5typ	85.5typ	84.5typ	86.0typ
		ACIN 230V	85.5typ	86.5typ	88.0typ	87.0typ	89.0typ
	POWER FACTOR (Io=100%)	ACIN 100V	0.98typ				
		ACIN 230V	0.95typ				
	INRUSH CURRENT[A]	ACIN 100V	20/40typ (Io=100%) (Primary / Secondary inrush current) (More than 3 sec. to re-start)				
		ACIN 230V	40/40typ (Io=100%) (Primary / Secondary inrush current) (More than 3 sec. to re-start)				
	LEAKAGE CURRENT[mA]		0.4 / 0.75 max (ACIN 100V / 240V, 60Hz, Io=100%, According to IEC62368-1, and DEN-AN)				
OUTPUT	VOLTAGE[V]		12	15	24	36	48
	CURRENT[A] *2	ACIN 100V	53	43	27	18	13
		ACIN 230V	53	43	27 (31)	18	13
	LINE REGULATION[mV]		48max	60max	96max	144max	192max
	LOAD REGULATION[mV]		100max	120max	150max	150max	300max
	RIPPLE[mVp-p] *3	0 to +50℃	120max	120max	120max	150max	150max
		-20 to 0℃	160max	160max	160max	160max	400max
	RIPPLE NOISE[mVp-p] *3	0 to +50℃	150max	150max	150max	200max	200max
		-20 to 0℃	180max	180max	180max	240max	500max
	TEMPERATURE REGULATION[mV]	0 to +50℃	120max	150max	240max	360max	480max
		-20 to +50℃	180max	180max	290max	440max	600max
	DRIFT[mV] *4		48max	60max	96max	144max	192max
	START-UP TIME[ms]		400typ (ACIN 100V, Io=100%)				
	HOLD-UP TIME[ms]		35typ (ACIN 100V, Io=100%)				
	OUTPUT VOLTAGE ADJUSTMENT RANGE[V]		8.25 to 13.20	10.50 to 16.50	16.50 to 26.40	25.20 to 39.60	38.40 to 56.00
	OUTPUT VOLTAGE SETTING[V]		12.00 to 12.48	15.00 to 15.60	24.00 to 24.96	36.00 to 37.44	48.00 to 49.92
PROTECTION CIRCUIT AND OTHERS	OVERCURRENT PROTECTION		Works over 105% of rating and recovers automatically				
	OVERVOLTAGE PROTECTION[V]		14.4 to 18.6	18.0 to 23.3	28.8 to 37.2	43.2 to 54.0	57.6 to 80.0
	REMOTE SENSING		Provided				
	REMOTE ON/OFF		Provided				
ISOLATION	INPUT-OUTPUT-RC		3,000VAC 1minute, Cutoff current = 10mA, 500VDC 100MΩmin (At Room Temperature)				
	INPUT-FG		2,000VAC 1minute, Cutoff current = 10mA, 500VDC 100MΩmin (At Room Temperature)				
	OUTPUT-RC-AUX-FG		500VAC 1minute, Cutoff current = 100mA, 500VDC 100MΩmin (At Room Temperature)				
	OUTPUT-RC-AUX		500VAC 1minute, Cutoff current = 100mA, 500VDC 100MΩ min (At Room Temperature)				
ENVIRONMENT	OPERATING TEMP.,HUMID.AND ALTITUDE *1		-20 to +70℃ (Refer to "Derating"), 20 - 90%RH (Non condensing)				
	STORAGE TEMP.,HUMID.AND ALTITUDE		-20 to +75℃, 20 - 90%RH (Non condensing)				
	VIBRATION		10 - 55Hz, 19.6m/s² (2G), 3minutes period, 60minutes each along X, Y and Z axis				
	IMPACT		196.1m/s² (20G), 11ms, once each X, Y and Z axis				
SAFETY AND NOISE REGULATIONS	AGENCY APPROVALS (At only AC input)		UL62368-1, C-UL (equivalent to CAN/CSA-C22.2No.62368-1), EN62368-1, Complies with DEN-AN				
	CONDUCTED NOISE		Complies with CISPR11-B, CISPR32-B, EN55011-B, EN55032-B, FCC Part15-B, FCC Part18-B, VCCI-B				
	HARMONIC ATTENUATOR *5		Complies with IEC61000-3-2 (Class A)				
OTHERS	CASE SIZE/WEIGHT		120×61×190mm [4.72×2.4×7.48 inches] (without terminal block and screw) (W×H×D) /1.6kg max				
	COOLING METHOD *1		Forced cooling (internal fan)				

*1 Derating is required. Please contact us for DC input.
*2 ( ) means peak current. Peak loading for 10s. And Duty 35% max, refer to Instruction manual in detail.
*3 This is the value measured on measuring board with capacitor of 22μF within 150mm from output terminal.
Measured by 20MHz Oscilloscope or Ripple-Noise meter (Equivalent to KEISOKU-GIKEN : RM-104).
*4 Drift is the change in DC output for an eight hour period after a half-hour warm-up at 25℃, with the input voltage held constant at the rated input/output.
*5 Please contact us about another class. When two or more units are operating it may not comply with the IEC61000-3-2. Please contact us for details.
* To meet the specification, do not operate overload condition.
* Sound noise may be generated by power supply in case of pulse load.

Downloaded from Arrow.com.

Block diagram

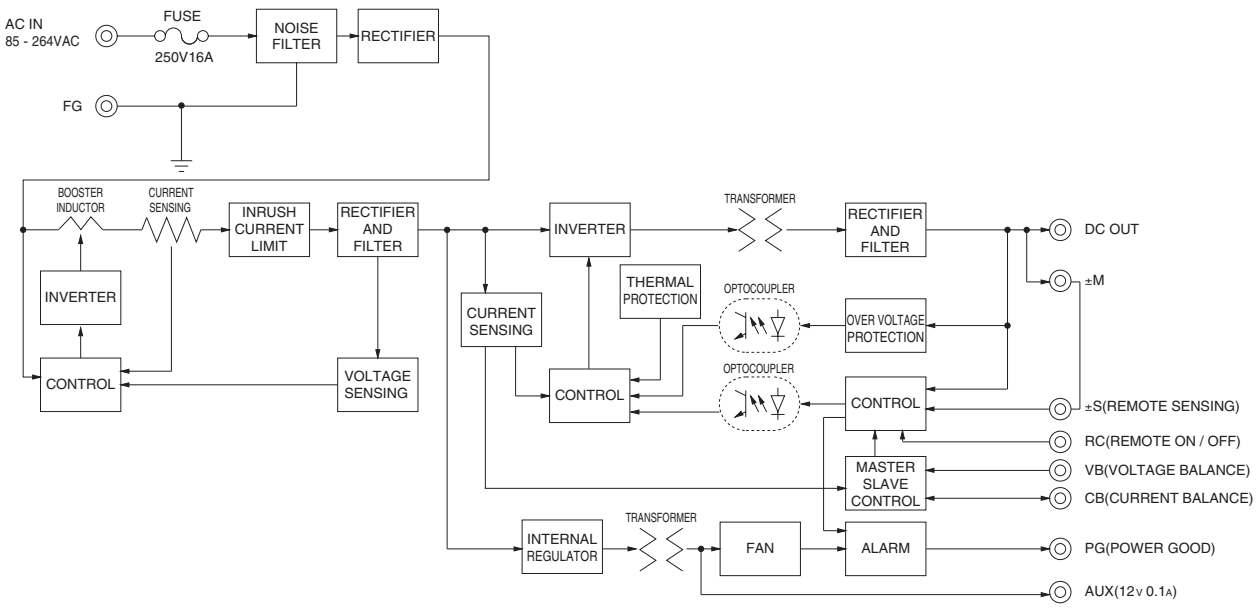

External view

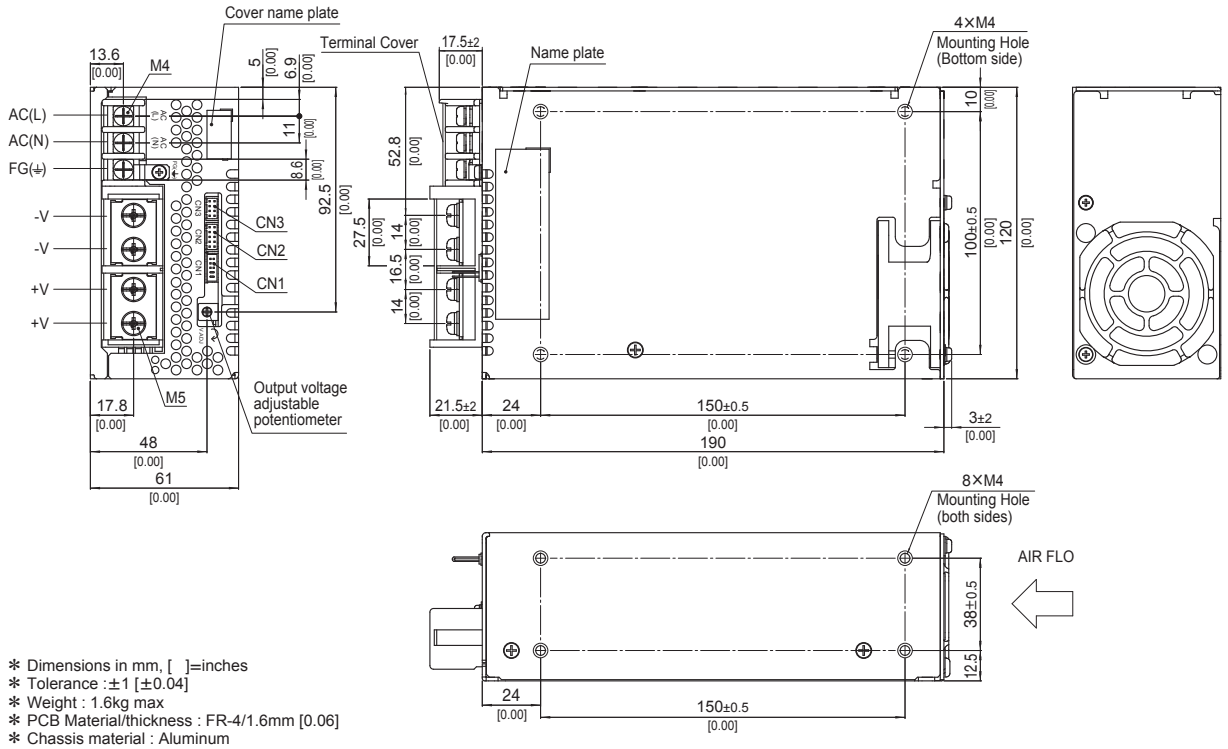

- ∗ Dimensions in mm, [ ]=inches
- ∗ Tolerance :±1 [±0.04]
- ∗ Weight : 1.6kg max
- ∗ PCB Material/thickness : FR-4/1.6mm [0.06]
- ∗ Chassis material : Aluminum
- ∗ Mounting torque : 1.2N • m max
- ∗ Screw tightening torque
  M4 : 1.6N • m max
  M5 : 2.5N • m max
- ∗ The housing for the remote sensing unused is mounted on CN1
- ∗ Please connect safety ground to FG terminal on the unit

Downloaded from Arrow.com.

Terminal Blocks

＊The following information covers PDA300F - 600F. Please see External View for PDA15F - 150F.

● PDA300F

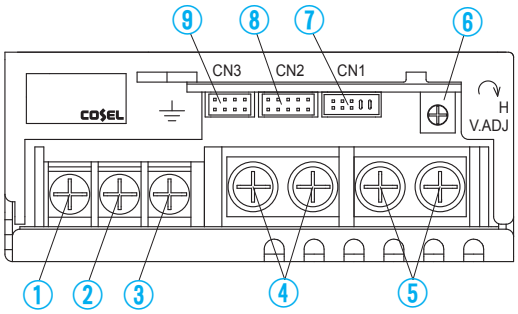

● PDA600F

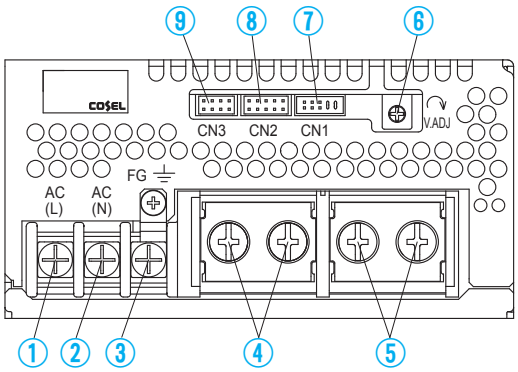

①AC (L) } Input Terminals 85 - 264VAC ϕ45 - 66Hz
②AC (N) }
③Frame ground (M4 ⏚)
④-Output
⑤+Output
⑥Output voltage adjustable potentiometer
⑦CN1 }
⑧CN2 } Connectors
⑨CN3 }

● PDA300F, 600F Pin Configuration

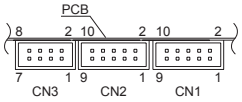

Pin Configuration and Functions of CN1 and CN2

Pin No.	Function	
1	+M	: Self sensing terminal. (Do not wire for external connection.)
2	+S	: +Sensing
3	-M	: Self sensing terminal. (Do not wire for external connection.)
4	-S	: -Sensing
5	VB	: Voltage balance
6	CB	: Current balance
7	TRM	: Adjustment of output voltage
8	-S	: -Sensing
9	RC2	: Remote ON/OFF
10	RCG	: Remote ON/OFF (GND)

Pin Configuration and Functions of CN3

Pin No.	Function	
1	-S	: -Sensing
2	-S	: -Sensing
3	AUX	: Auxiliary output (12V 0.1A)
4	RC1	: Remote ON/OFF
5	AUXG	: Auxiliary output (GND)
6	N.C.	: No connection
7	PG	: Alarm
8	PGG	: Alarm (GND)

＊Common signs among CN1, CN2 and CN3 such as -S represent the same potential.

Matching connecters and terminals on CN1, CN2 and CN3

Connector		Housing	Terminal		Mfr.
CN1 CN2	S10B-PHDSS	PHDR-10VS	Reel Loose	: SPHD-002T-P0.5 : BPHD-001T-P0.5	J.S.T.
CN3	S8B-PHDSS	PHDR-08VS			

Downloaded from Arrow.com.

Assembling and Installation Method

Installation method

■Do not insert a screw more than 6mm from the outside of a power supply to keep enough insulation distance between the screw and internal components.

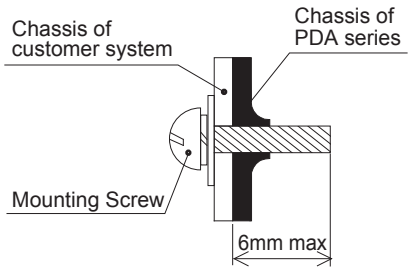

● PDA15F, PDA30F, PDA50F, PDA100F, PDA150F

■For the metal chassis, keep the distance d1 for isolation between component and metal chassis.
The d1 dimension is the distance required for insulation and does not satisfy cooling conditions. For cooling conditions, please refer to “Derating” and section 3 of the instruction manual.

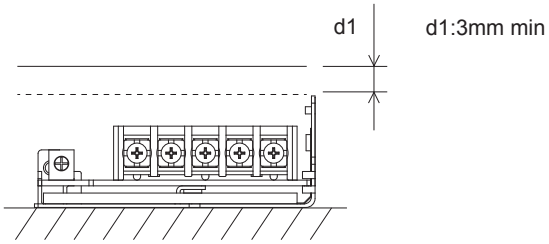

■If you use two or more power supplies side by side, please keep a sufficient distance between them to allow enough air ventilation.
■Ambient temperature around each power supply should not exceed the temperature range shown in “Derating”.

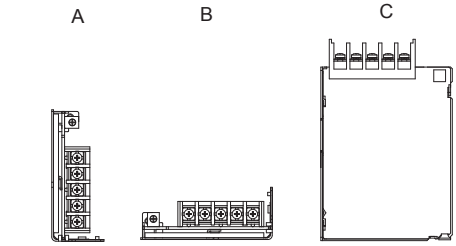

Normal mounting

● PDA300F, PDA600F

■If you need to secure a power supply by screws, securely fix it, taking into consideration of its weight. You can install it in any direction.

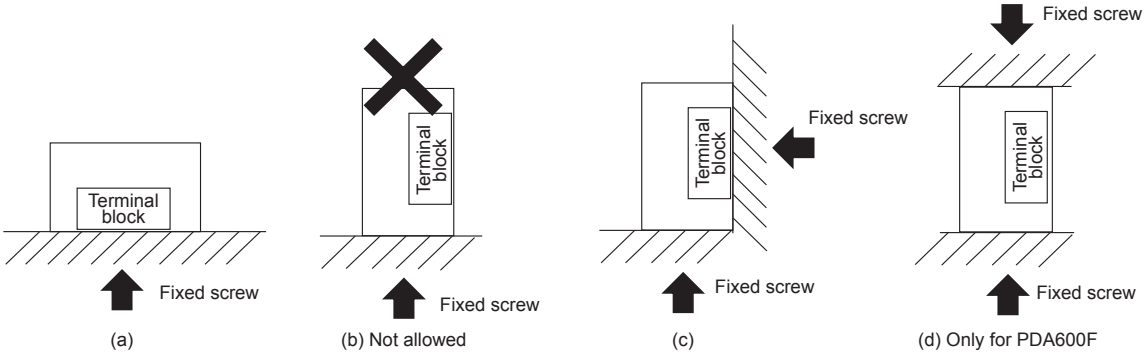

■If you use a power supply in a dusty environment, it can cause a failure. Please consider taking such countermeasures as installing an air filter near the suction area of the system to prevent a failure.
■The power supplies have a built-in forced cooling fan. Do not block ventilation at the suction side and its opposite side.

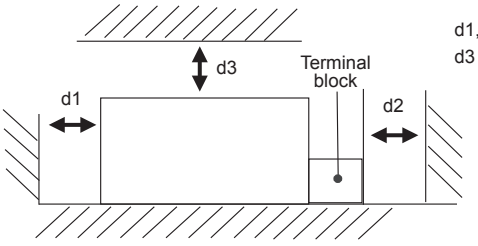

d1,d2 : 30mm min
d3 (Only for PDA300F) : 30mm min

Downloaded from Arrow.com.

Derating

Derating curve for input voltage
PDA15F, PDA30F

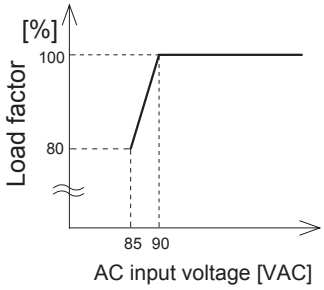

PDA15F
Ambient temperature derating curve (Reference value)

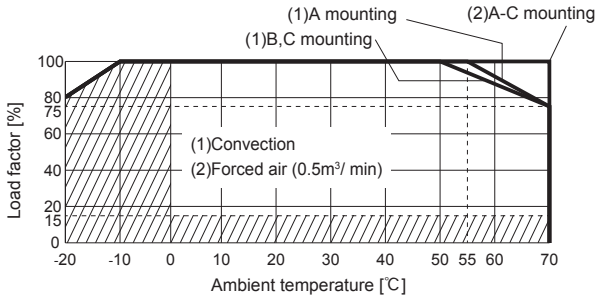

PDA15F-□-N
Ambient temperature derating curve (Reference value)

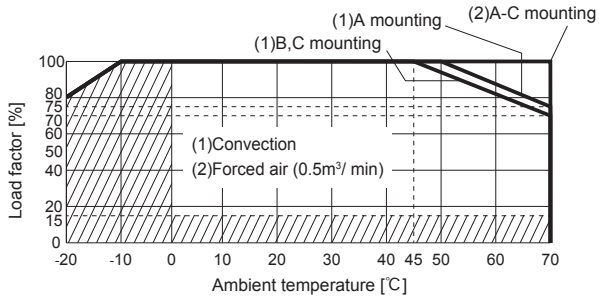

PDA30F
Ambient temperature derating curve (Reference value)

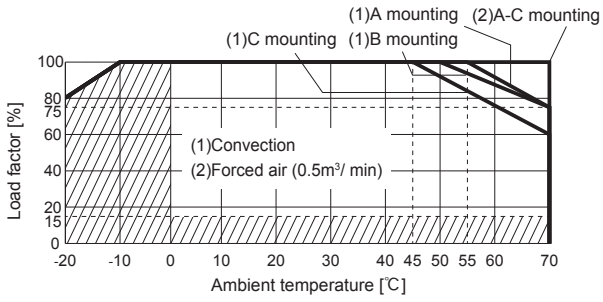

PDA30F-□-N
Ambient temperature derating curve (Reference value)

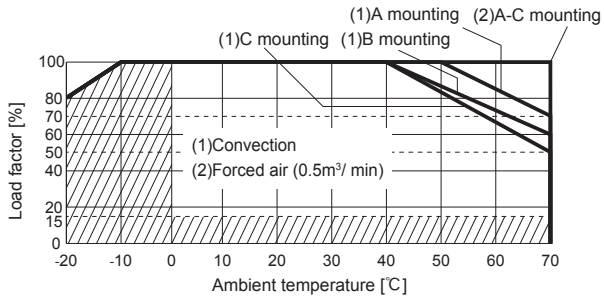

PDA50F-5
Ambient temperature derating curve (Reference value)

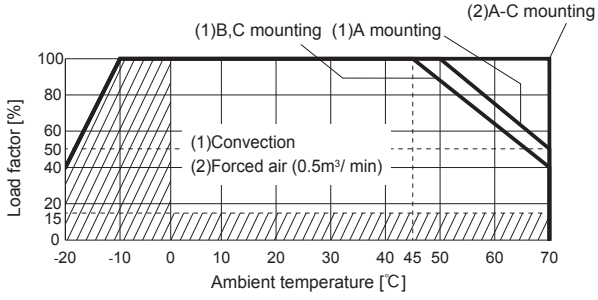

PDA50F-5-N
Ambient temperature derating curve (Reference value)

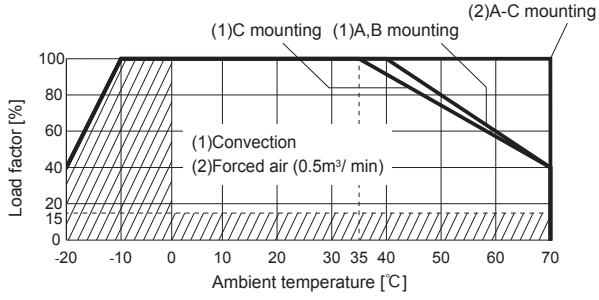

Downloaded from Arrow.com.

Derating

● PDA50F-12, -24
Ambient temperature derating curve
(Reference value)

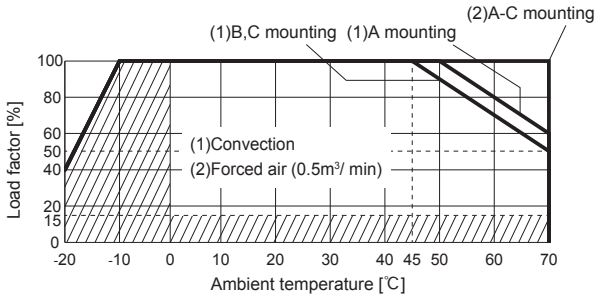

● PDA50F-12-N, -24-N
Ambient temperature derating curve
(Reference value)

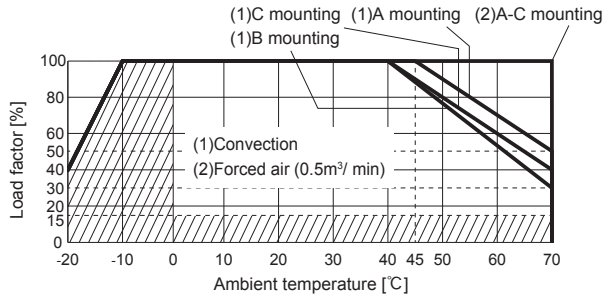

● PDA100F
Ambient temperature derating curve
(Reference value)

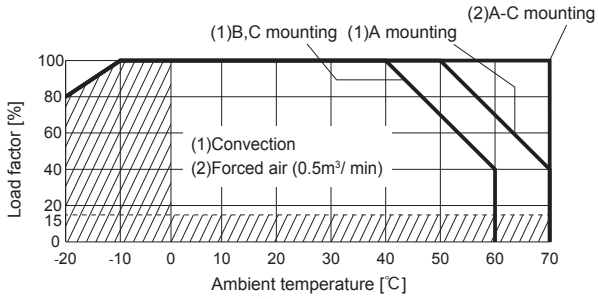

● PDA100F-□-N
Ambient temperature derating curve
(Reference value)

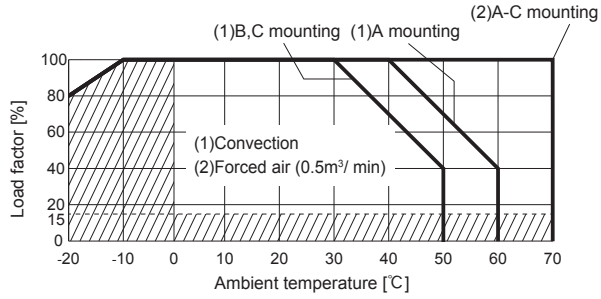

● PDA150F-5
Ambient temperature derating curve
(Reference value)

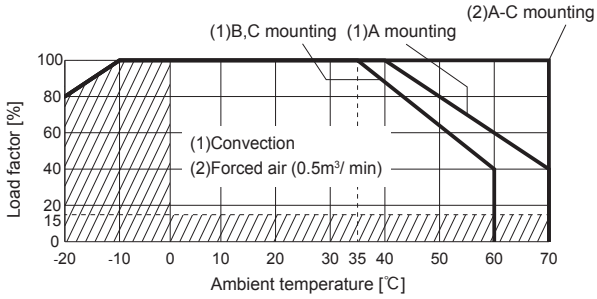

● PDA150F-5-N
Ambient temperature derating curve
(Reference value)

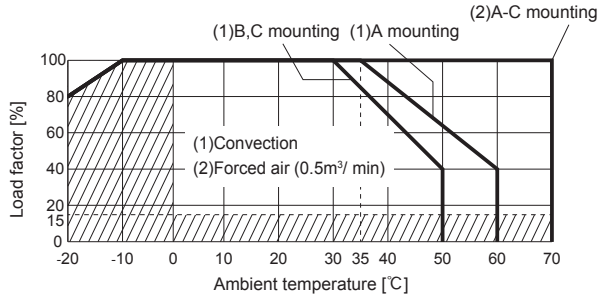

● PDA150F-12, -15, -24
Ambient temperature derating curve
(Reference value)

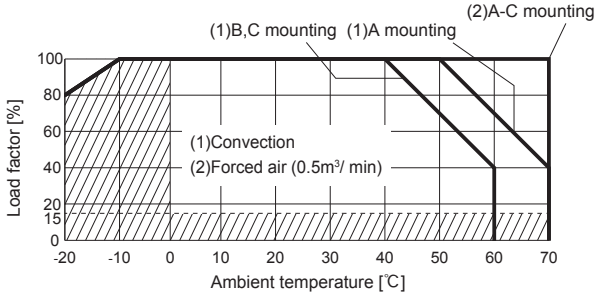

● PDA150F-12-N, -15-N, -24-N
Ambient temperature derating curve
(Reference value)

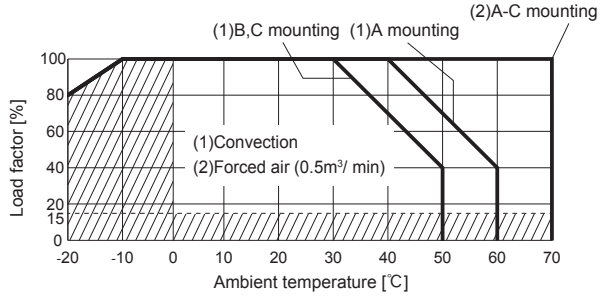

Downloaded from Arrow.com.

Derating

■The operating ambient temperature is different by with / without chassis cover or mounting position.
■In the hatched area, the specification of Ripple, Ripple Noise is different from other area.
■The ambient temperature should be measured 5 to 10 cm away from the power supply so that it won't be influenced by the heat from the power supply.
■Please make sure the maximum component temperature rise given in Instruction manual 3 is not exceeded.
■Please contact us for more information about operating ambient temperature.

● PDA300F, PDA600F Ambient temperature derating curve (Reference value)

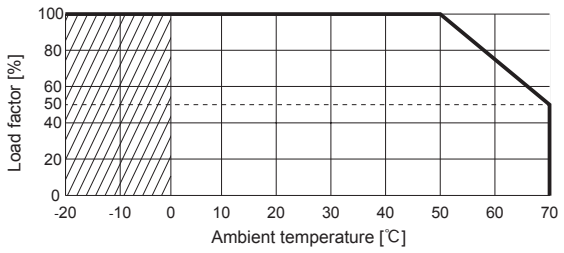

■In the hatched area, the specification of Ripple, Ripple Noise is different from other area.
■Derating curve depending on an ambient temperature (temperature of air sucked in for a cooling purpose) is shown above.

Instruction Manuals

◆ Please see catalog and instructionmanual before you use.

Instruction Manuals https://www.cosel.co.jp/redirect/catalog/en/PDA/
Before using our product https://en.cosel.co.jp/technical/caution/index.html

PDA NOTICE

Basic Characteristics Data

Model	Circuit method	Switching frequency [kHz] ∗1 ∗2	Input current ∗3 [A]	Inrush current protection	PCB/Pattern			Series/Parallel operation availability	
					Material	Single sided	Double	Series operation	Parallel operation
PDA15F	Flyback converter	20 to 125	0.35	Thermistor	CEM-3	Yes	-	Yes	No
PDA30F	Flyback converter	30 to 130	0.62	Thermistor	CEM-3	Yes	-	Yes	No
PDA50F	Flyback converter	25 to 130	1.05	Thermistor	CEM-3	Yes	-	Yes	No
PDA100F	Active filter	20 to 250	1.3	Thermistor	FR-4	-	Yes	Yes	No
	Flyback converter	45 to 110							
PDA150F	Active filter	20 to 250	1.8	Thermistor	FR-4	-	Yes	Yes	No
	Flyback converter	45 to 110							
PDA300F	Active filter	65	4.1	Thermistor	FR-4		Yes	Yes	Yes
	Forward converter	140							
PDA600F	Active filter	65	7.9	SCR	FR-4		Yes	Yes	Yes
	Forward converter	220							

∗1 The value changes depending on input and load.
∗2 At light load, burst operation is performed to reduce input power. The switching frequency is changed by using condition. Please contact us for more details.
∗3 The value of input current is at ACIN 100V and rated load.
∗1,∗2 are only for PDA15F-150F

Downloaded from Arrow.com.