Silent 250 Watt

ITE Grade
AC-DC Power Supplies

250 Watt

- 4.5 x 2.5 X 1.5
- Mounting as per 4 X 2 footprint / 3 X 5 footprint
- 250 Watt Convection Cooled & 350 Watt Forced Cooled
- Efficiency up to 94%
- -40 to 70 degree operating temperature
- High power density: 20.74 W/inch^3
- 12 V Fan O/P / Thermal Shut-Down feature / Dual fusing
- Current Sharing (optional with ADD-ON card)
- 5 V STBY / PGPF Signal / Remote ON-OFF Feature (optional)
- 800K Hours, Telcordia -SR332-issue 3 MTBF
- No Load Power < 1W
- Available with metal enclosures / accessories

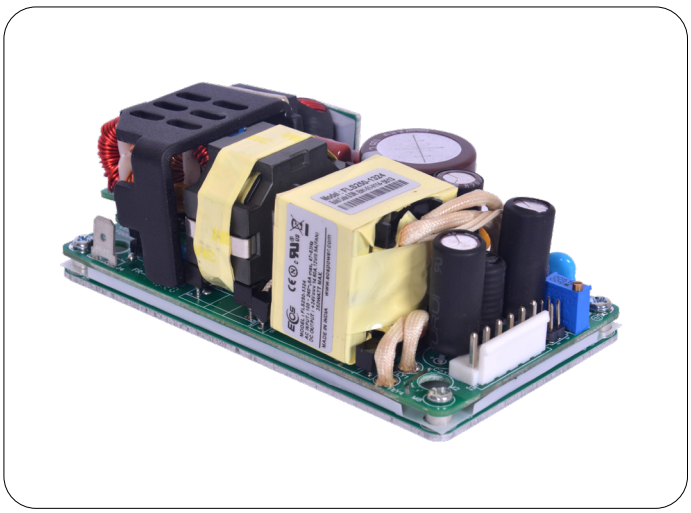

Dimension	
FLS :	4.5 x 2.5 x 1.5 Inches Form factor

The New FLS250 series is true fanless power up to 250W. this is a highly efficient power supply that can deliver up to 350W with air. The power supply is packed in 4.5” x 2.5” size having the option of industry-standard 2” x 4” or 3” x 5” like a mounting option. Also available in various type of casing option.

250 Watts

Model Number	Description	Voltage	Max. Load (Convection)	Max. Load (375 LFM)	Min. Load	Ripple[1]
FLS250-1X12	with Screw Terminal	12V	16.60A	25.00A	0.0A	2%
FLS250-1X12	with JST Connector	12V	16.60A	18.00A	0.0A	2%
FLS250-1X15	with Screw Terminal	15V	13.30A	20.00A	0.0A	2%
FLS250-1X15	with JST Connector	15V	13.30A	18.00A	0.0A	2%
FLS250-1X24	with Screw Terminal	24V	10.41A	14.50A	0.0A	1%
FLS250-1X24	with JST Connector	24V	10.41A	14.50A	0.0A	1%
FLS250-1X30	with Screw Terminal	30V	8.30A	11.60A	0.0A	1%
FLS250-1X30	with JST Connector	30V	8.30A	11.60A	0.0A	1%
FLS250-1X48	with Screw Terminal	48V	5.20A	7.20A	0.0A	1%
FLS250-1X48	with JST Connector	48V	5.20A	7.20A	0.0A	1%
FLS250-1X58	with Screw Terminal	58V	4.30A	6.0A	0.0A	1%
FLS250-1X58	with JST Connector	58V	4.30A	6.0A	0.0A	1%

Notes:

- For Screw Terminal version replace “X” above with “0”, example FLS250-1024.
- For Header version replace “X” above with “3”, example FLS250-1324
- Add Suffix “H” for I/P voltage operation up to 305VAC,example: FLS250-1024-H
- Add Suffix “B“ for 3 X 5 Mounting option, example FLS250-1024-B
- For Power supply unit with L bracket (metal accessory option) add “-L” suffix at the end of model number
- For Power supply unit with U channel (metal accessory option) add “-U” suffix at the end of model number
- For Power supply unit with CK Cover kit (metal accessory option) add “-CK” suffix at the end of model number

Please read our datasheet & drawing disclaimer here.
Downloaded from Arrow.com.

- For Current Sharing (ADD-ON CARD) Option, (pls contact EOS RSM for further details and ordering)
- For 5V STBY / Remote ON-OFF / PGPF use model number FLS250-2XXX, (pls contact EOS RSM for further details and ordering).
- FLS250 -L Bracket, -U channel, - CK Metal Cover Kit Accessory Available. (pls contact EOS RSM for further details and ordering)

Pin Connection

J1 (Input)	PIN 1	AC LINE
	PIN 2	NOT FITTED
	PIN 3	AC NEUTRAL
J2 Option 1 & 2 (Output)	PIN 1,2,3	V1 +VE
	PIN 4,5,6	V1 -VE
J4 (Earth)		Quick Disconnect
(J9) Signal Connector	PIN 1	+VS
	PIN 2	-VS
	PIN 3	FAN -
	PIN 4	FAN +
J(310) (Multifunction Connector)***	PIN 1	+5V
	PIN 2	GND
	PIN 3	GND
	PIN 4	REMOTE ON/OFF
	PIN5	PGPF

Notes:

1. "***" mark content available only in FLS250-2XXX series
2. Ripple is peak to peak with 20 MHz bandwidth and 10 µF (Electrolytic capacitor) in parallel with a 0.1 µF capacitor at rated line voltage and load ranges.
3. Specifications are for nominal input voltage, 25°C unless otherwise stated.
4. 250W with natural convection cooling at 100 to 264VAC.
5. 350W with Forced cooling at 100 to 264VAC.
6. Combine Output Power of Main Output, Fan supply and Standby shall not exceed max power rating.
7. Output ripple can be more than 1 % of the output voltage.
8. When used in Cover Kit, de-rate output power to 70% under all operating conditions.
9. "***" Standby output voltage 5 V/ 0.5A(convection) with tolerance including set point accuracy, line and load regulation is +/-10 %.Ripple and noise is less than 5 %.

Input

Characteristic	Minimum	Typical	Maximum	Units	Notes & Conditions
Input Voltage	85		264	VAC	De-rate linearly from 100% at 100VAC to 80% at 85VAC
	120		370	VDC	
Input Frequency	47		63	Hz	
Input Current			6.3	A	
Inrush Current	115 VAC - 25A	230VAC - 45A	264 VAC -75A	A	
No Load Input Power			1	W	
Power Factor	exceeds 0.95 at Full Load				

Downloaded from Arrow.com.

Output

Characteristic	Minimum	Typical	Maximum	Units	Notes & Conditions
Output Power		250	350	W	
Hold-up Time		8mS			At 230 VAC
Line Regulation			+/-0.5%		
Load Regulation			+/-0.5%		
Output Voltage Adjustability			+/-3%		
Rise Time		55		ms	
Set Point Tolerance		+/-1%			
Over Current Protection		> 110%			
Over Voltage Protection		110 to 140%			
Transient Response		25% step load change, at 0.1A/uS slew rate, 50% duty cycle, 50Hz=4% , recovery time < 5 ms			

General

Characteristic	Minimum	Typical	Maximum	Units	Notes & Conditions
Efficiency	92%		94%		At 230 VAC
Mean Time Between Failure	800K Hours				Telcordia -SR332-issue 3
Isolation: Input to Output		4000		VDC	ITAV
Input to Ground		2500			
Leakage Current		300 uA Typical			

Efficiency Vs Load

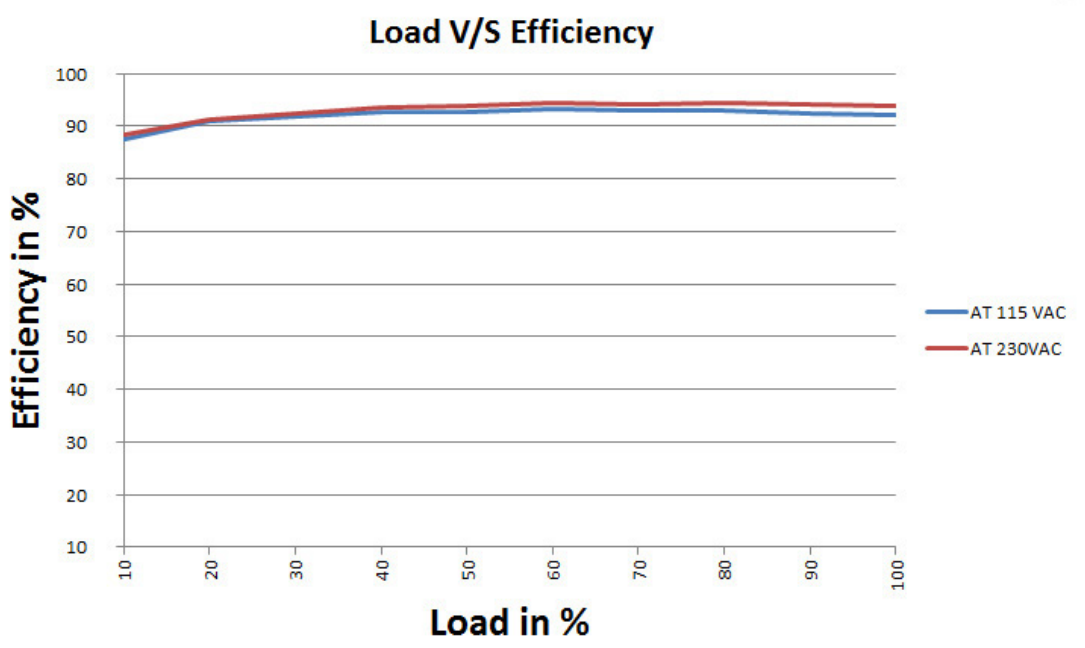

Downloaded from Arrow.com.

Environmental

Characteristic	Minimum	Typical	Maximum	Units	Notes & Conditions
Operating Temperature	-40		70	°C	-40 to 0 startup is guaranteed with spec deviation. 70°C (Derated)
Storage Temperature	-40		85	°C	
Relative Humidity	5		95	%	
Operating Altitude			16,000	ft	RH, non-condensing
Short Circuit Protection		Hiccup mode			
Switching Frequency		PFC – 70 to 130 KHz ,PWM – 50-80 KHz			
Cooling					350W with 375 LFM forced air cooling at 100 to 264VAC 250W with natural convection cooling at 100 to 264VAC

Signals & Controls

Characteristic	Notes & Conditions
***Power Good	Is a TTL signal which goes high after main output reaches 90% of its set value. The delay is 0.1 s to 0.5 s
***Power Fail	The same signal goes low at least 1ms before main output falls to 90% of set value at AC Power off
***Remote on/off	Shorting Pin 3 to Pin 4 enables main output while keeping the Pins open disables main output.

Signals & Controls Drawing

***Power Good / Power Fail Signal

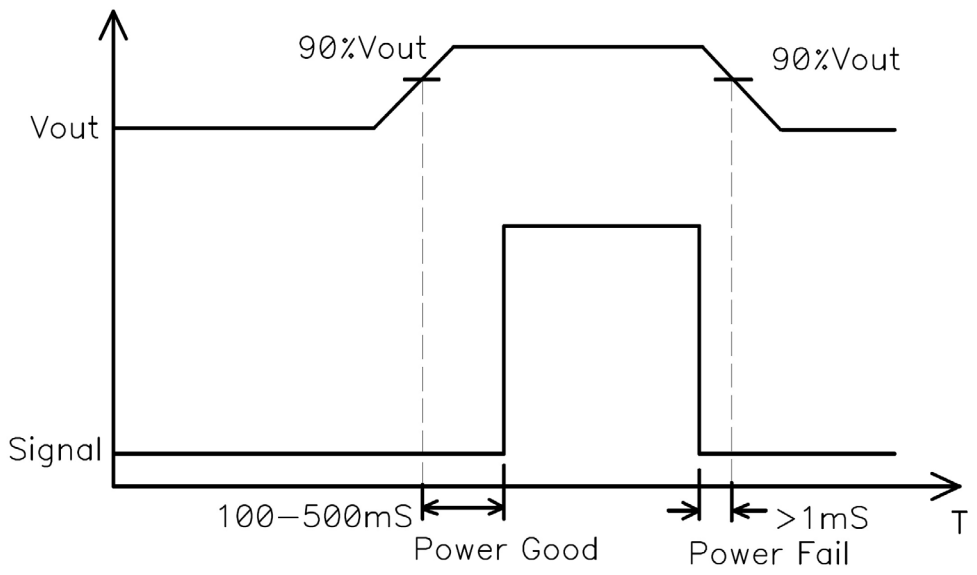

Downloaded from Arrow.com.

Signals & Controls Drawing

*** Remote ON OFF

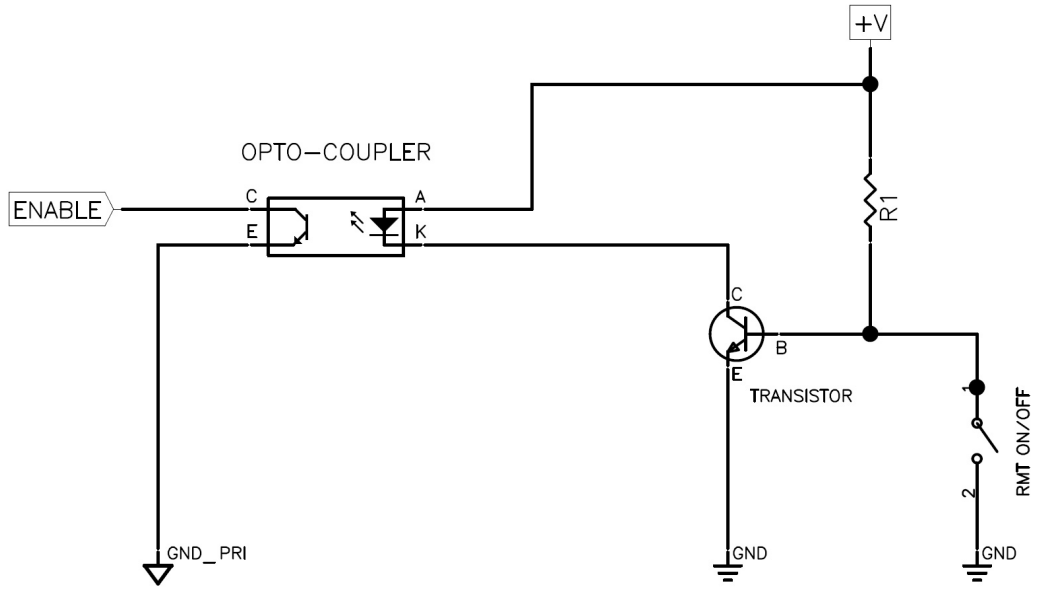

Signals & Controls Drawing

Voltage Sense

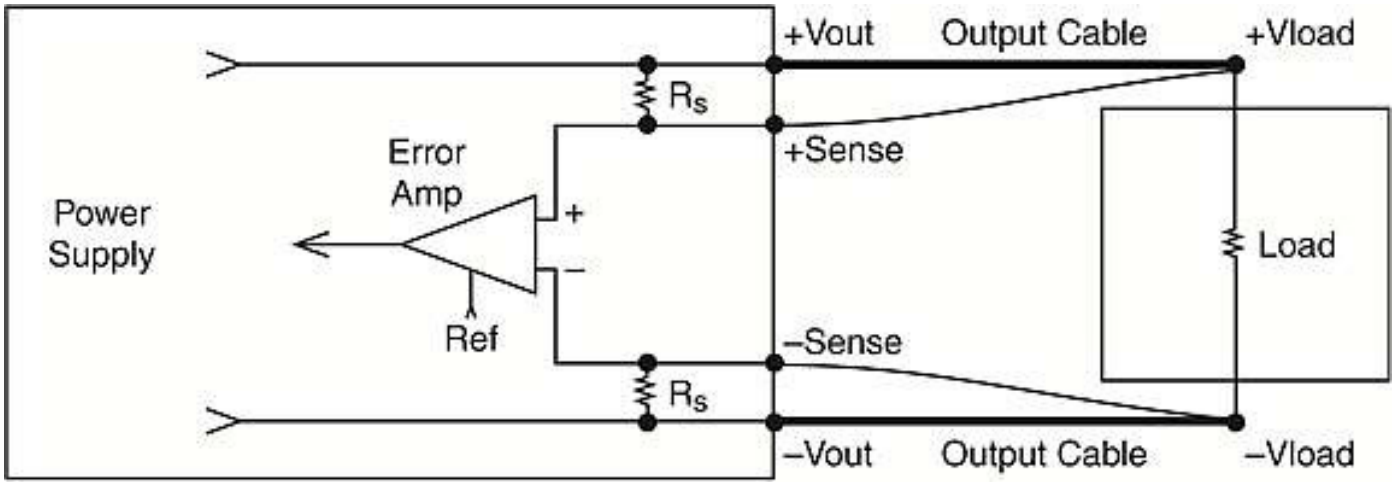

Downloaded from Arrow.com.

Mechanical Specifications

AC Input Connector (J1)	Molex: 26-60-4030 Mating: 09-50-3031; Pins: 08-50-0106
DC Output Connector (J2) Option 1 (Screw Terminal)	Molex: 39357 Series or equivalent
DC Output Connector (J2) Option 2 (JST Connector)	JST p/n: B6P-VH(LF)(SN) Mating: JST p/n: VHR-6M; Pins: SVH-41T-P1.1
Signal Connector (J9)	Molex Part No: 10-89-7041 or equivalent Mating part no: 1053082204 ; Pins: 1053001100
J(310) (Multifunction Connector)***	HEADER 5POS 2.54MM) P/N : P9102-40-12-1 Mating part no : CONN RCPT HSNG 5POS CST-100 II P/N :1375820-5 Pins : CONN SOCKET 22-26AWG CRIMP TIN P/N : 1375819-1
Dimensions	4.5 x 2.5 x 1.58 inches
	(114.30 x 63.5 x 40 mm)
Weight	400 gm approx

EMC: Emissions

Phenomenon	Standard	Test Level	Notes & Conditions
Conducted	EN 55032	Level B	CISPR22-B, FCC PART15-B
Radiated	EN 55032	Level A	Level B with external core (King core K5B RC 25x12x15-M or Equivalent in input cable)

EMC: Immunity

Phenomenon	Standard	Test Level	Criteria	Notes & Conditions
Input Current Harmonics	EN 61000-3-2		Class A	
Voltage Fluctuation and Flicker	EN 61000-3-3			compliance
ESD Immunity	EN 61000-4-2	Level 3	A	
Radiated Field Immunity	EN 61000-4-3	Level 3	A	
Electrical Fast Transient Immunity	EN61000-4-4	Level 3	A	
Surge Immunity	EN 61000-4-5	Level 3	A	
Conducted Immunity	EN 61000-4-6	Level 3	A	
Magnetic Field Immunity	EN 61000-4-8	Level 3	A	
Voltage dips, interruptions	EN 61000-4-11		A & B	

Safety Approvals

Safety Agency	Safety Standard	Notes & Conditions
CB	IEC62368-1:2018	ITAV
Nemko	EN62368-1:2020;A11	
UL	UL62368-1 ED 3.0	
CSA	CAN/CSA C22.2 No. 62368-1:19	
CE Mark	Complies with LVD Directive	

Downloaded from Arrow.com.

Derating Curve

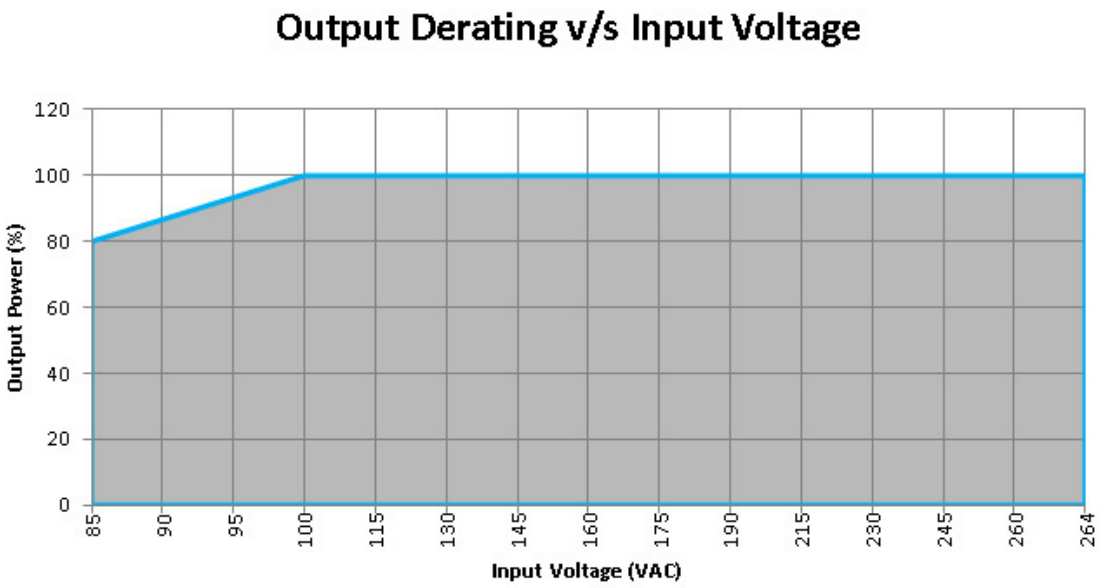

De-rate linearly from 100% at 100VAC to 80% at 85VAC.

Derating Curve

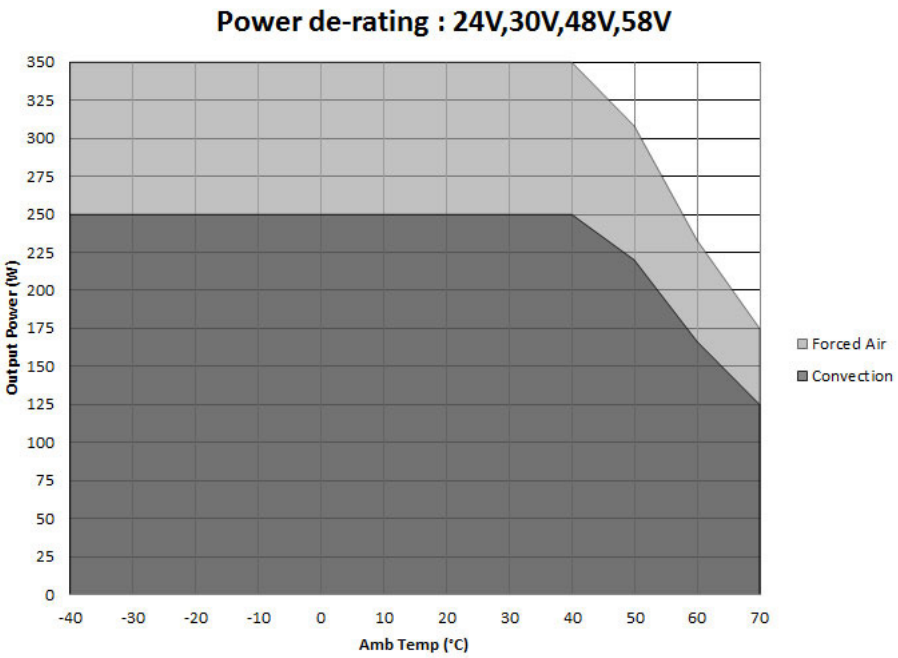

Convection load: 250W up to 40 °C. De-rate Between 40°C -50°C @ 1.2 % per °C above 50 °C @ 1.67 % per °C

Forced air cooled load: 350W up to 40 °C. De-rate Between 40°C -50°C @ 1.2 % per °C above 50 °C @ 1.67 % per °C

Downloaded from Arrow.com.

Derating Curve

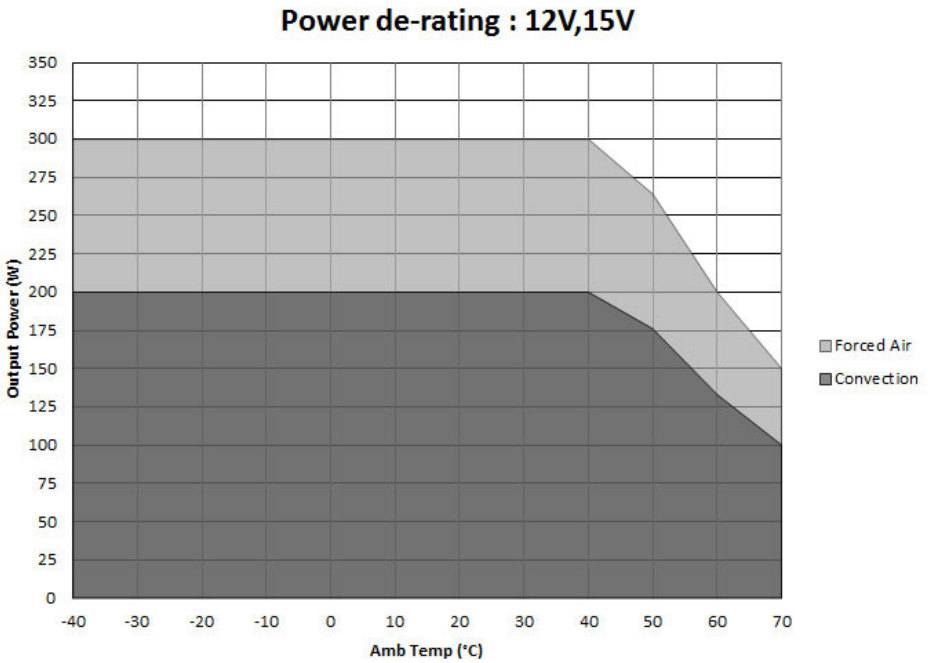

Convection load: 200W up to 40 °C. De-rate Between 40°C -50°C @ 1.2 % per °C above 50 °C @ 1.67 % per °C

Forced air cooled load: 300W up to 40 °C. De-rate Between 40°C -50°C @ 1.2 % per °C above 50 °C @ 1.67 % per °C

Derating Curve

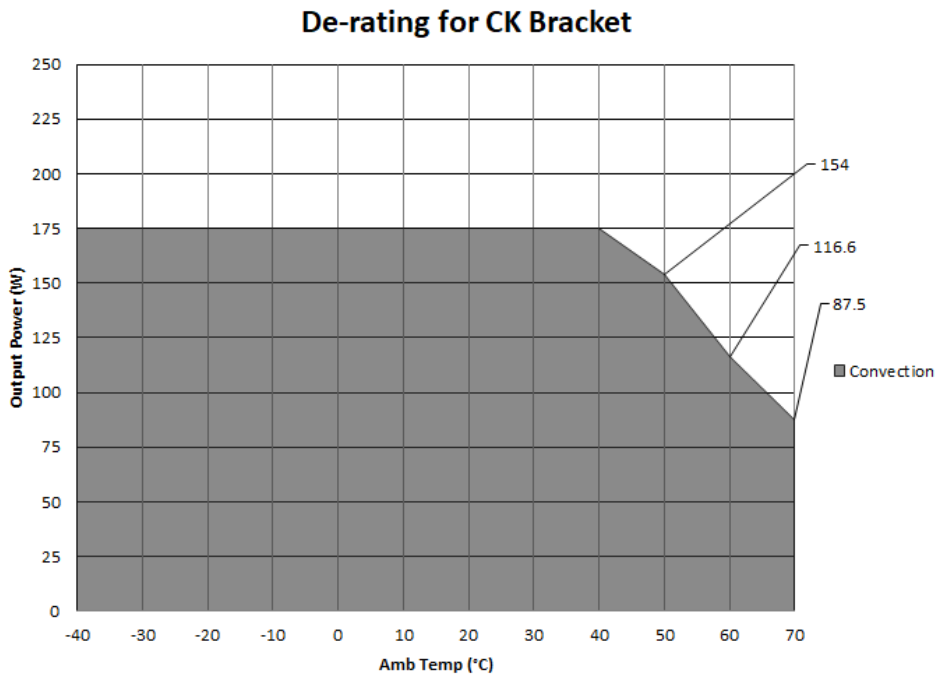

Convection load: 175W up to 40 °C. De-rate Between 40°C -50°C @ 1.2 % per °C above 50 °C @ 1.67 % per °C

Downloaded from Arrow.com.

Derating Curve

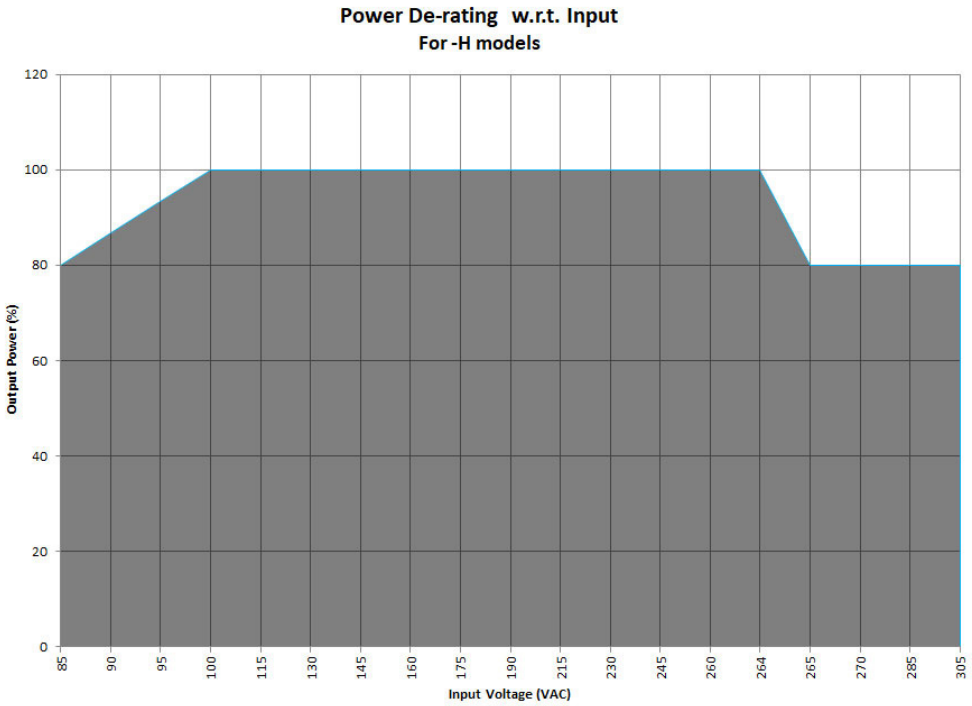

De-rate linearly from 100% at 100VAC to 80% at 85VAC & above 264VAC De-rate to 80%

Downloaded from Arrow.com.

Mechanical Drawing

Screw terminal (1XXX/ 2XXX)

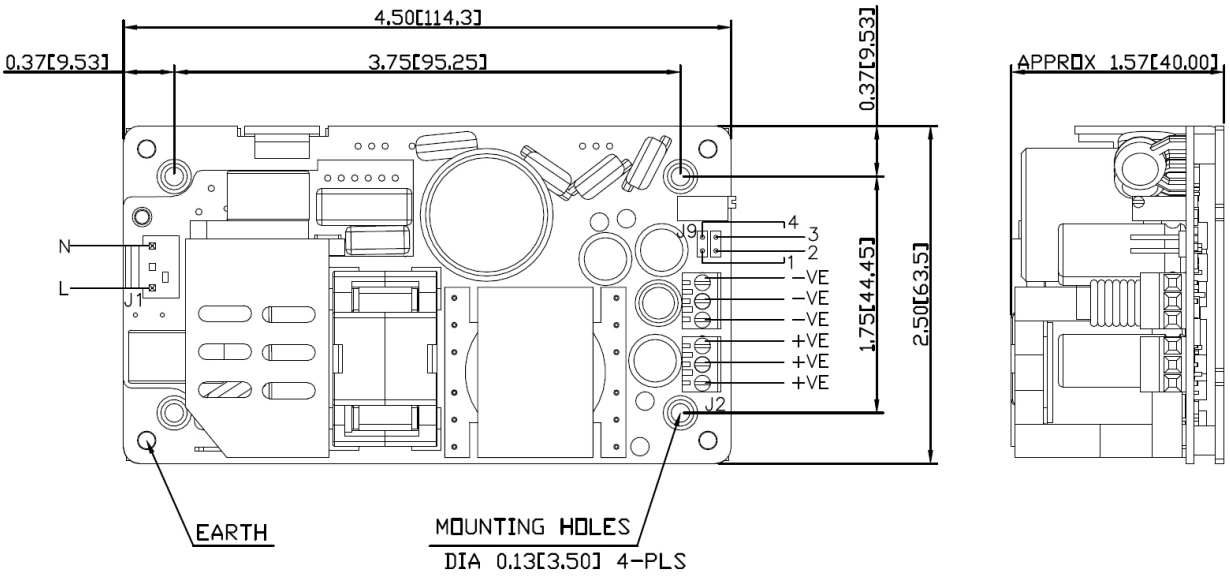

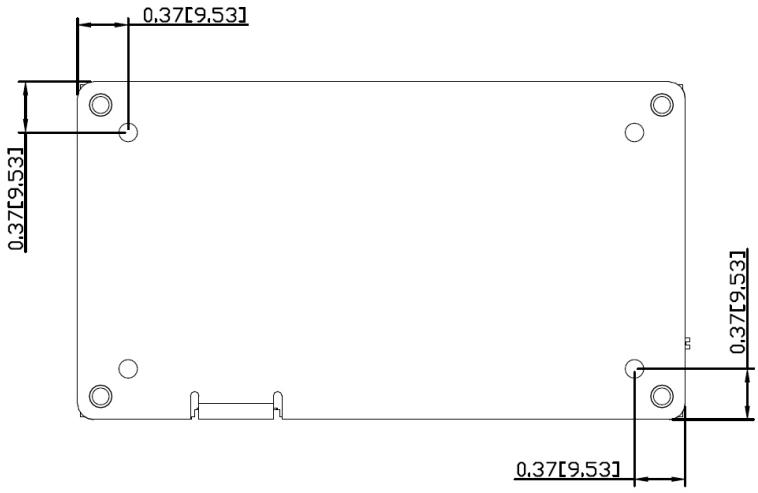

MECHANICAL OUTLINE DIMENSIONS
ALL DIMENSIONS ARE IN INCHES[MM]
GEN TOLERANCE +/-0.04 [+/-1.0MM]

Downloaded from Arrow.com.

Mechanical Drawing

Header terminal (1XXX/ 2XXX)

NOTE:-
PLEASE REFER "FLS250 2.5X4.5 WITH 'L' CHANNEL" SPEC
FOR CONNECTOR DETAILS ON PAGE NO.13.

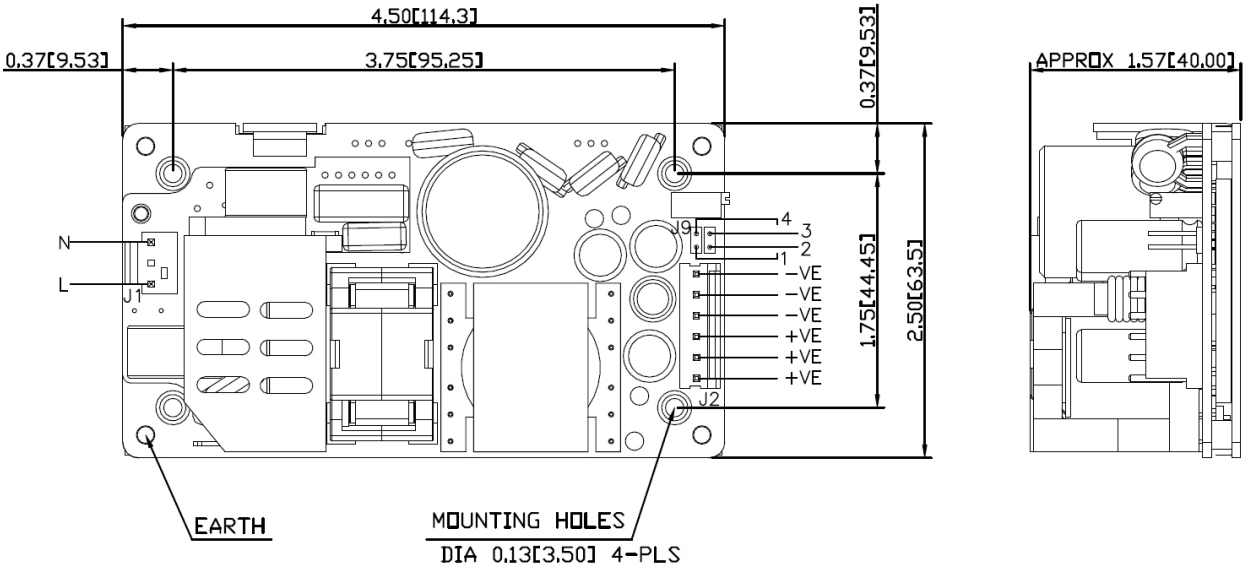

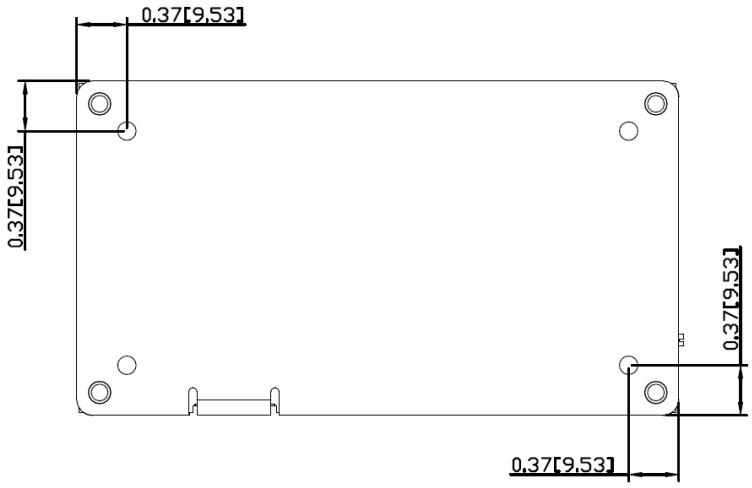

MECHANICAL OUTLINE DIMENSIONS
ALL DIMENSIONS ARE IN INCHES[MM]
GEN TOLERANCE :+/-0.04 [+/-1.0MM]

Downloaded from Arrow.com.

Mechanical Drawing

Screw terminal (1XXX-B/ 2XXX-B)

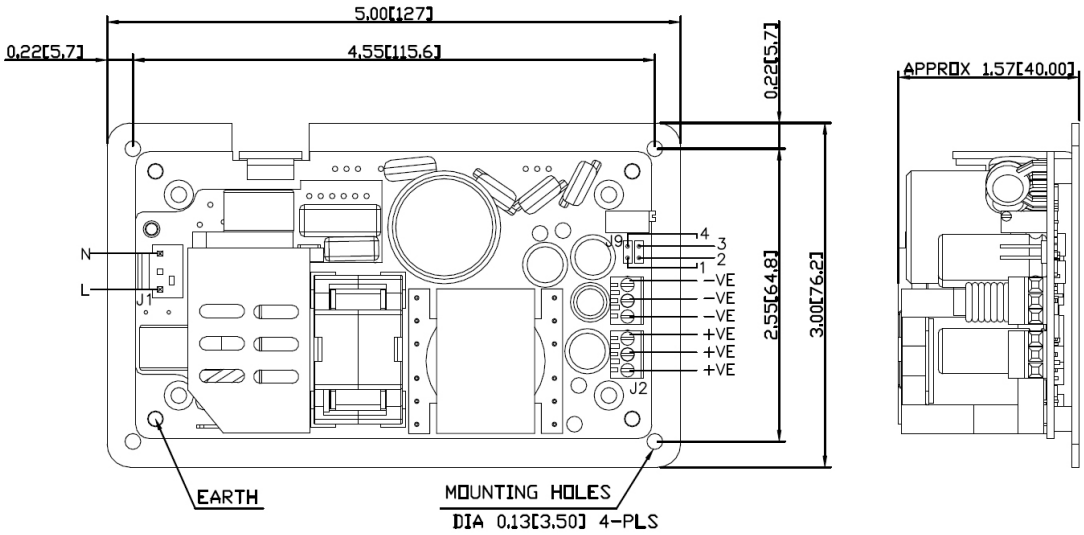

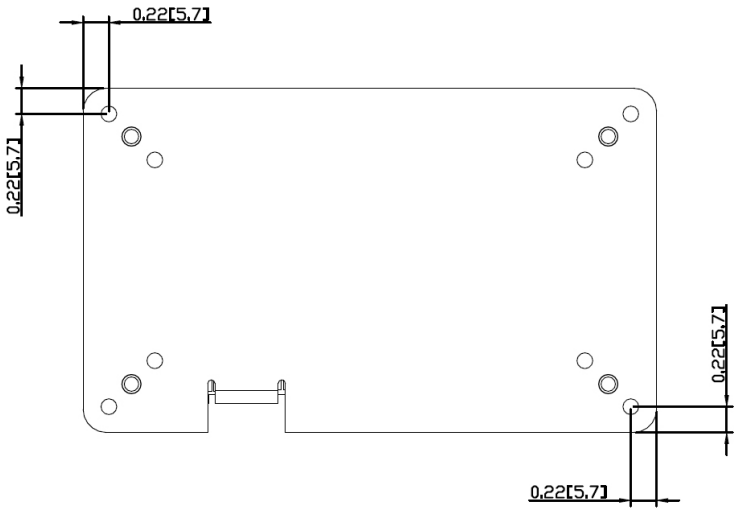

MECHANICAL OUTLINE DIMENSIONS
ALL DIMENSIONS ARE IN INCHES[MM]
GEN TOLERANCE ±+/-0.04 [+/-1.0MM]

Downloaded from Arrow.com.

Mechanical Drawing

Header terminal (1XXX-B/ 2XXX-B)

NOTE:-
PLEASE REFER "FLS250 2.5X4.5 WITH 'L' CHANNEL" SPEC
FOR CONNECTOR DETAILS ON PAGE NO.13.

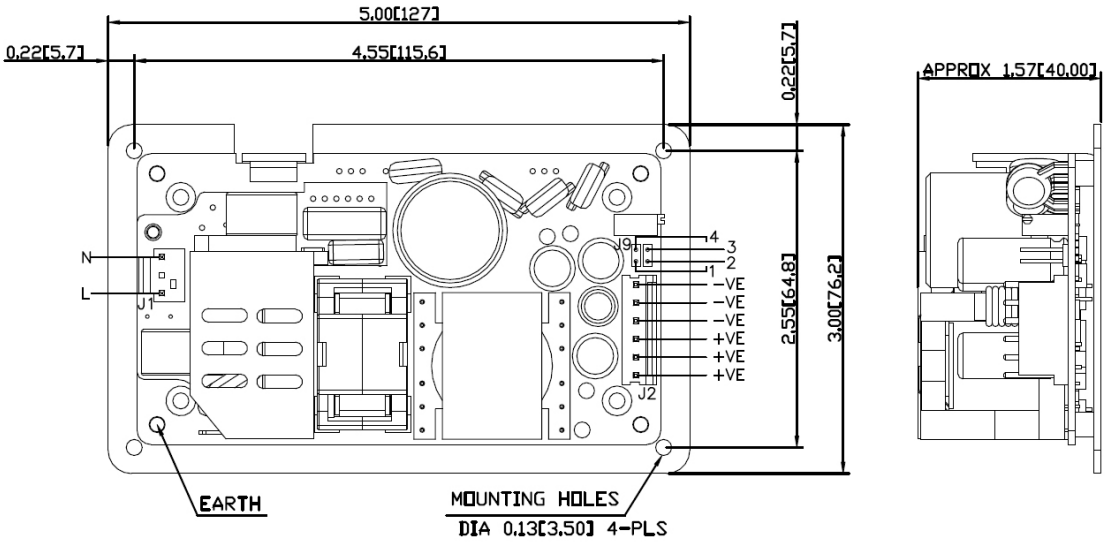

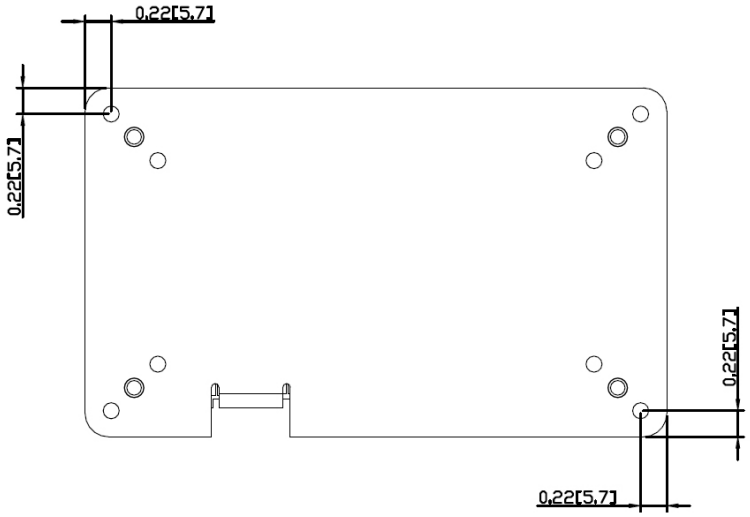

MECHANICAL OUTLINE DIMENSIONS
ALL DIMENSIONS ARE IN INCHES[MM]
GEN TOLERANCE :+/-0.04 [+/-1.0MM]

Downloaded from Arrow.com.

Mechanical Drawing

FLS250 2.5 X 4.5 with L-Bracket

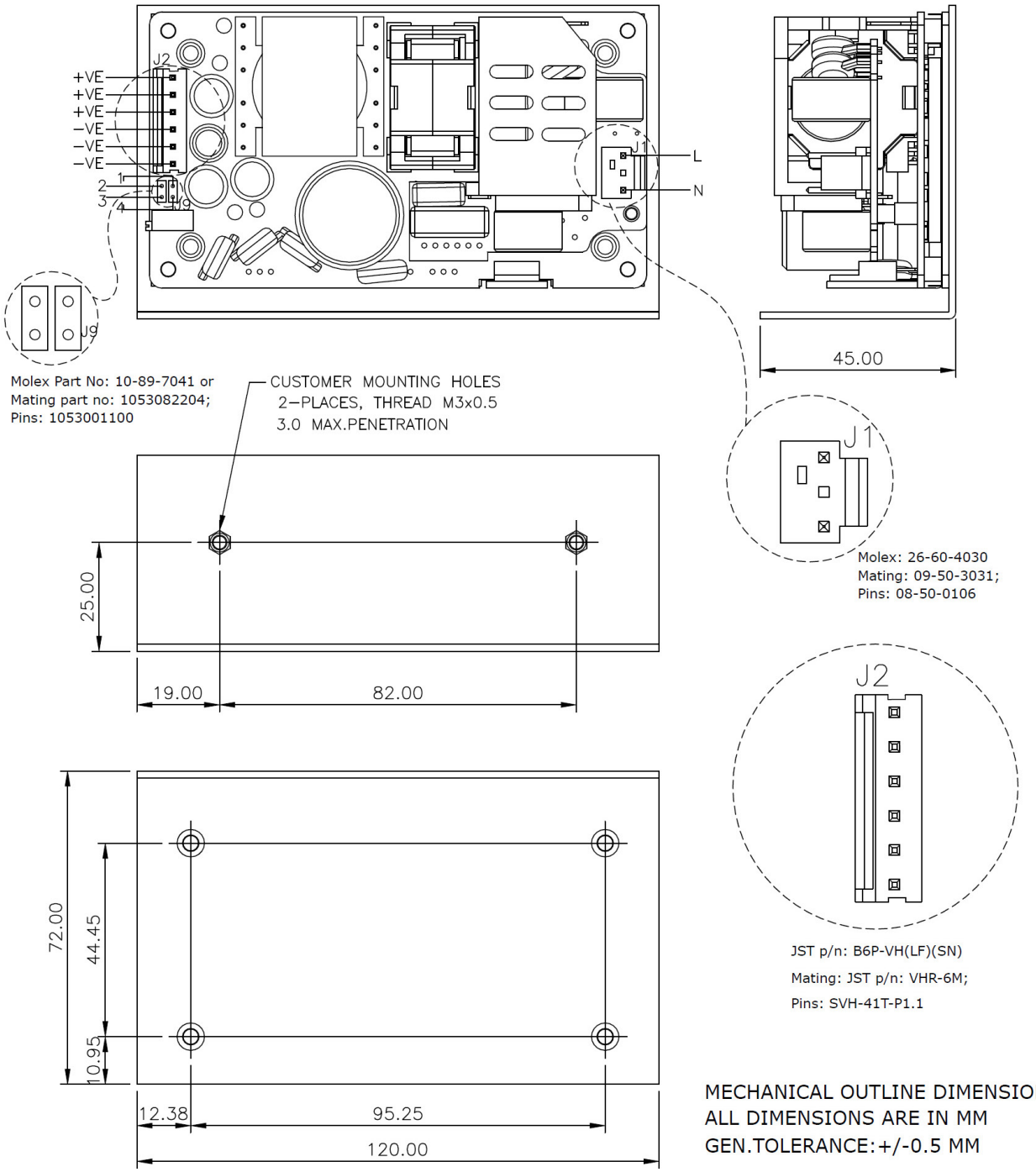

MECHANICAL OUTLINE DIMENSIONS
ALL DIMENSIONS ARE IN MM
GEN.TOLERANCE:+/-0.5 MM

Downloaded from Arrow.com.

Mechanical Drawing

FLS250 3 X 5 with L -Bracket

NOTE:-
PLEASE REFER "FLS250 2.5X4.5 WITH 'L' CHANNEL" SPEC
FOR CONNECTOR DETAILS ON PAGE NO.13.

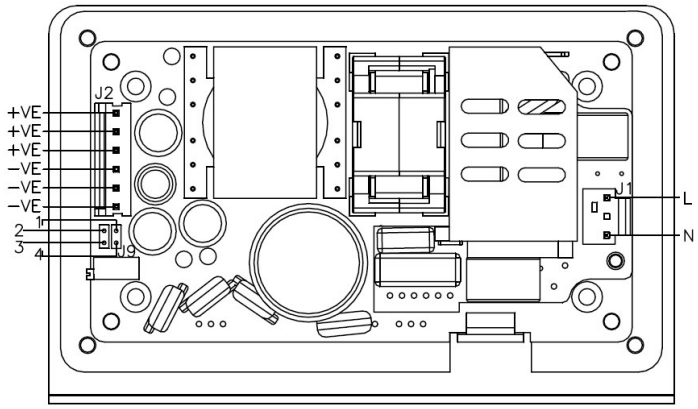

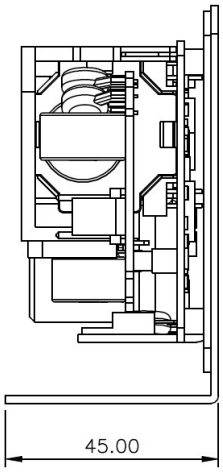

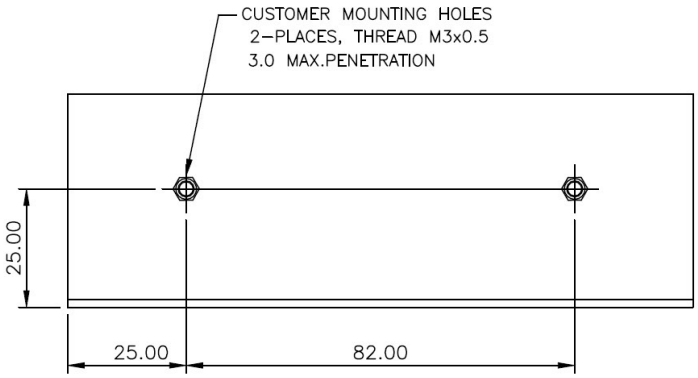

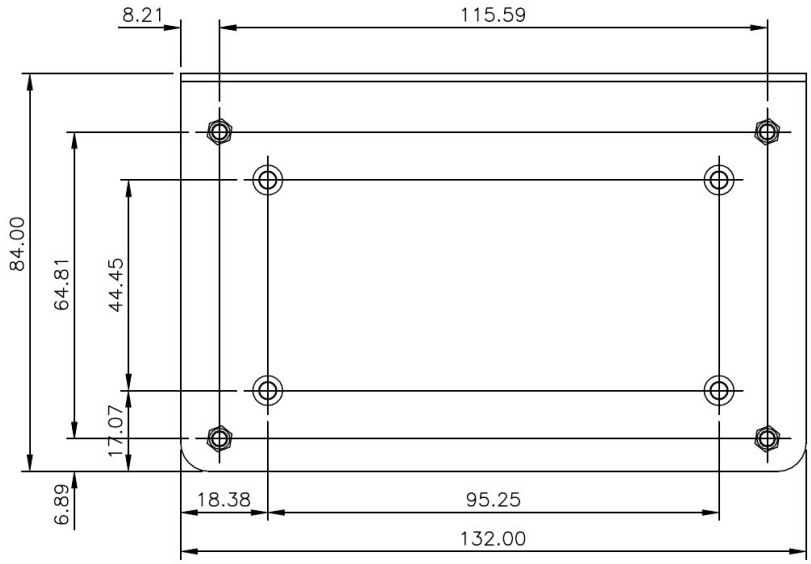

MECHANICAL OUTLINE DIMENSIONS
ALL DIMENSIONS ARE IN MM
GEN.TOLERANCE:+/-0.5 MM

Downloaded from Arrow.com.

Mechanical Drawing

FLS250 2.5 X 4.5 with U Channel

NOTE:-
PLEASE REFER "FLS250 2.5X4.5 WITH 'L' CHANNEL" SPEC
FOR CONNECTOR DETAILS ON PAGE NO.13.

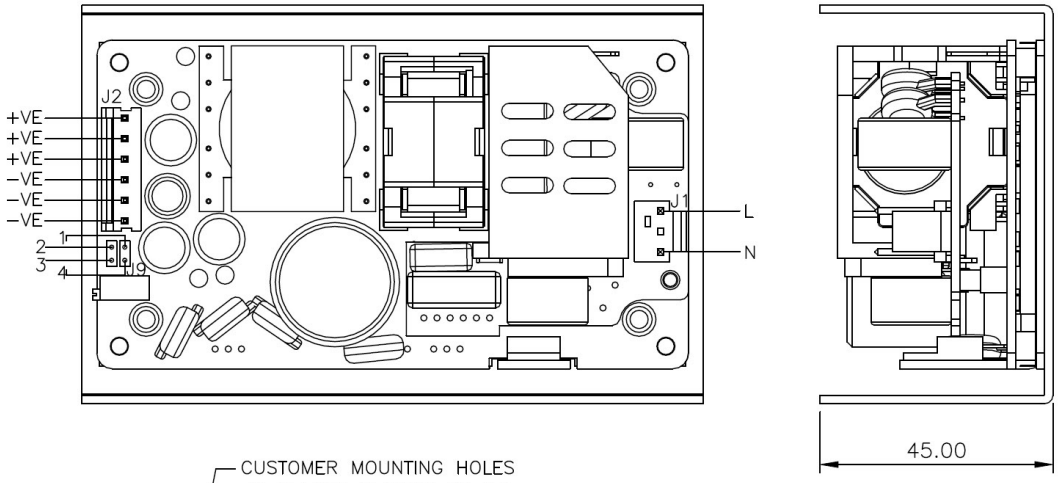

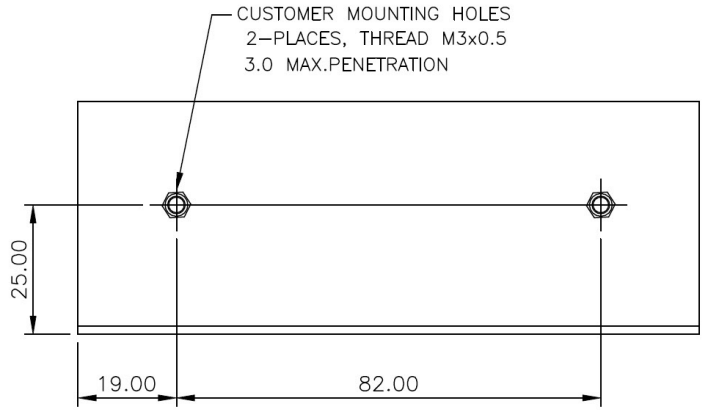

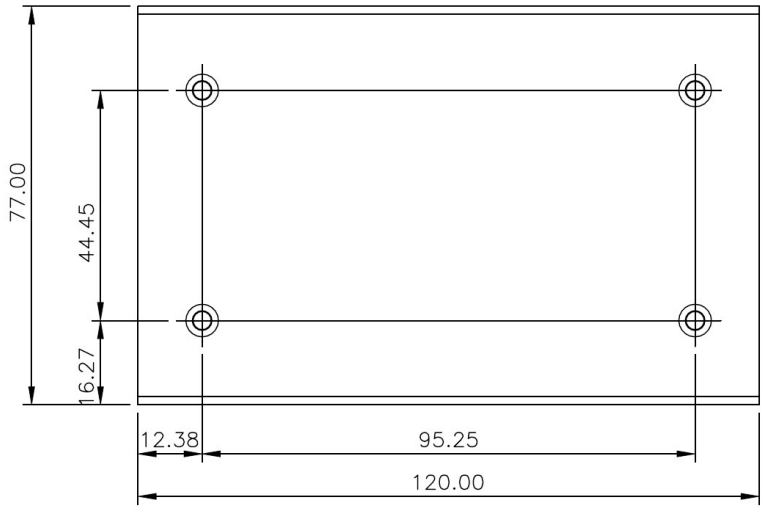

MECHANICAL OUTLINE DIMENSIONS
ALL DIMENSIONS ARE IN MM
GEN.TOLERANCE:+/-0.5 MM

Downloaded from Arrow.com.

Mechanical Drawing

FLS250 3 X 5 with U Channel

NOTE:-
PLEASE REFER "FLS250 2.5X4.5 WITH 'L' CHANNEL" SPEC
FOR CONNECTOR DETAILS ON PAGE NO.13.

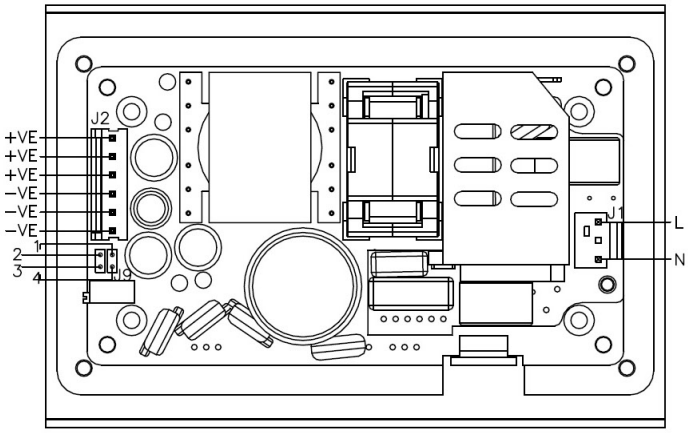

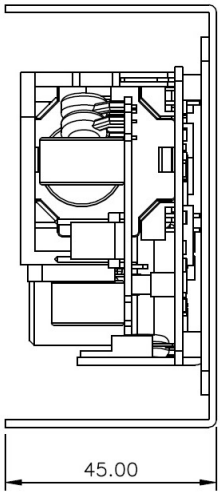

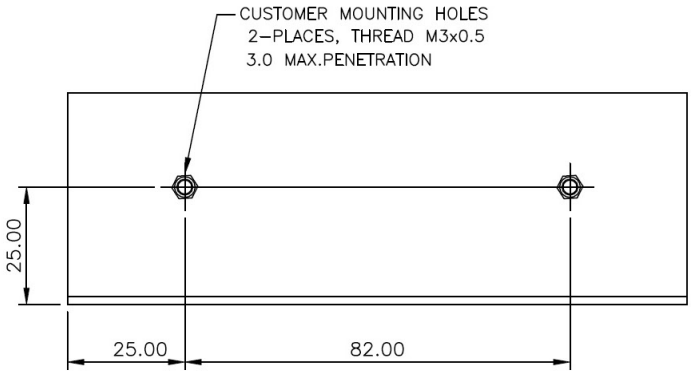

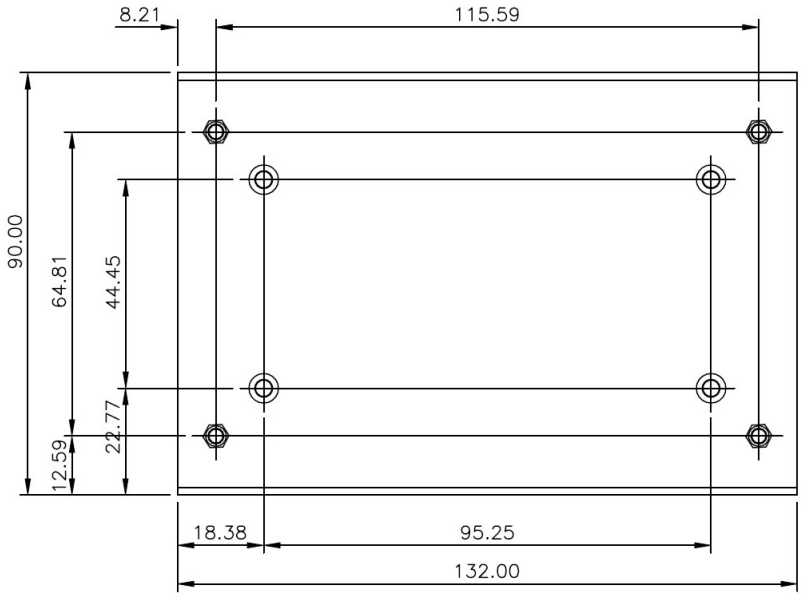

MECHANICAL OUTLINE DIMENSIONS
ALL DIMENSIONS ARE IN MM
GEN.TOLERANCE:+/-0.5 MM

Downloaded from Arrow.com.

Mechanical Drawing

FLS250 2.5 X 4.5 with Cover kit

NOTE:-
PLEASE REFER "FLS250 2.5X4.5 WITH 'L' CHANNEL" SPEC
FOR CONNECTOR DETAILS ON PAGE NO.13.

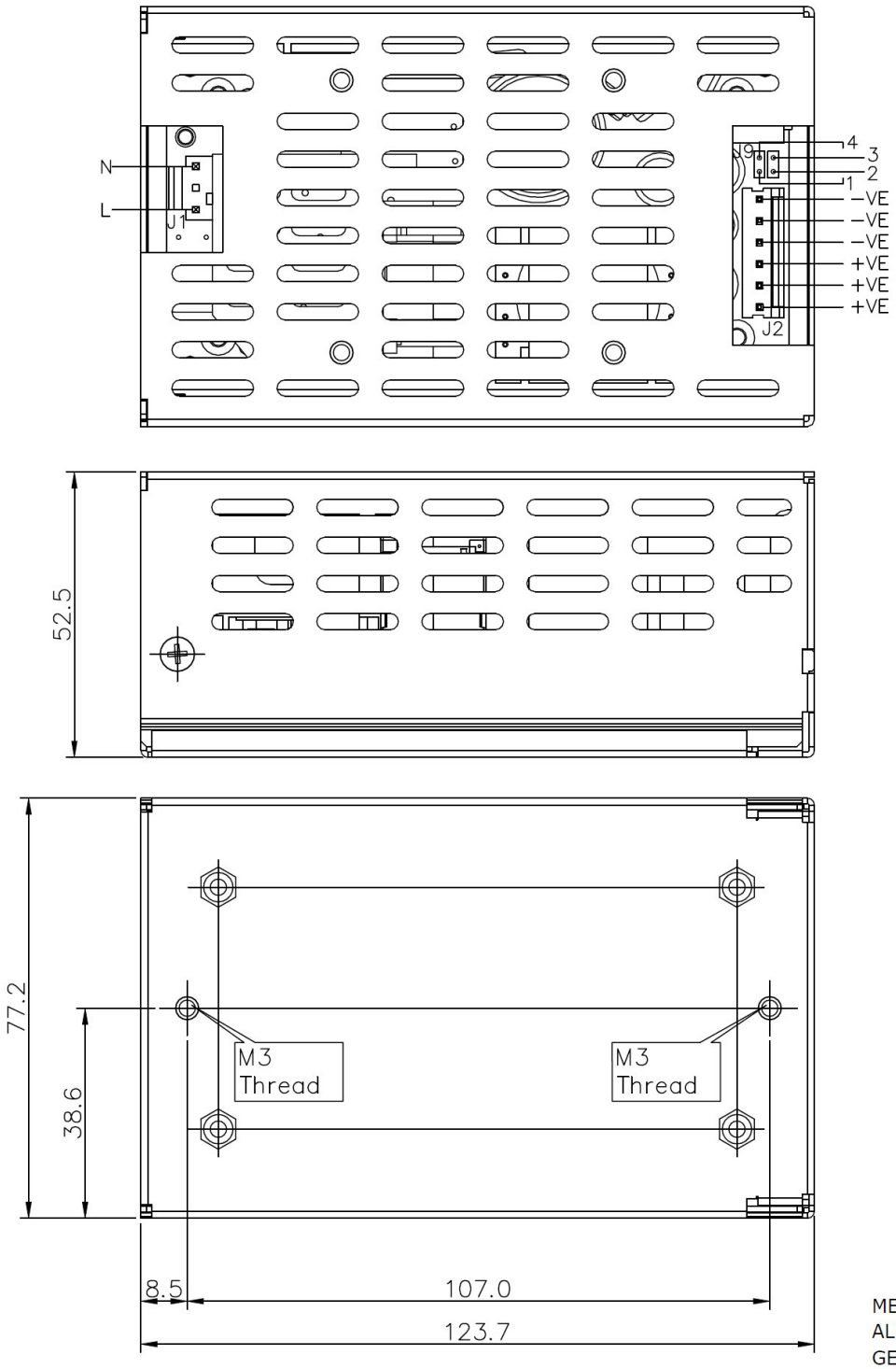

MECHANICAL OUTLINE DIMENSIONS
ALL DIMENSIONS ARE IN MM
GEN.TOLERANCE:+/-0.5 MM

Downloaded from Arrow.com.

Mechanical Drawing

FLS250 3 X 5 with Cover Kit

NOTE:-
PLEASE REFER "FLS250 2.5X4.5 WITH 'L' CHANNEL" SPEC
FOR CONNECTOR DETAILS ON PAGE NO.13.

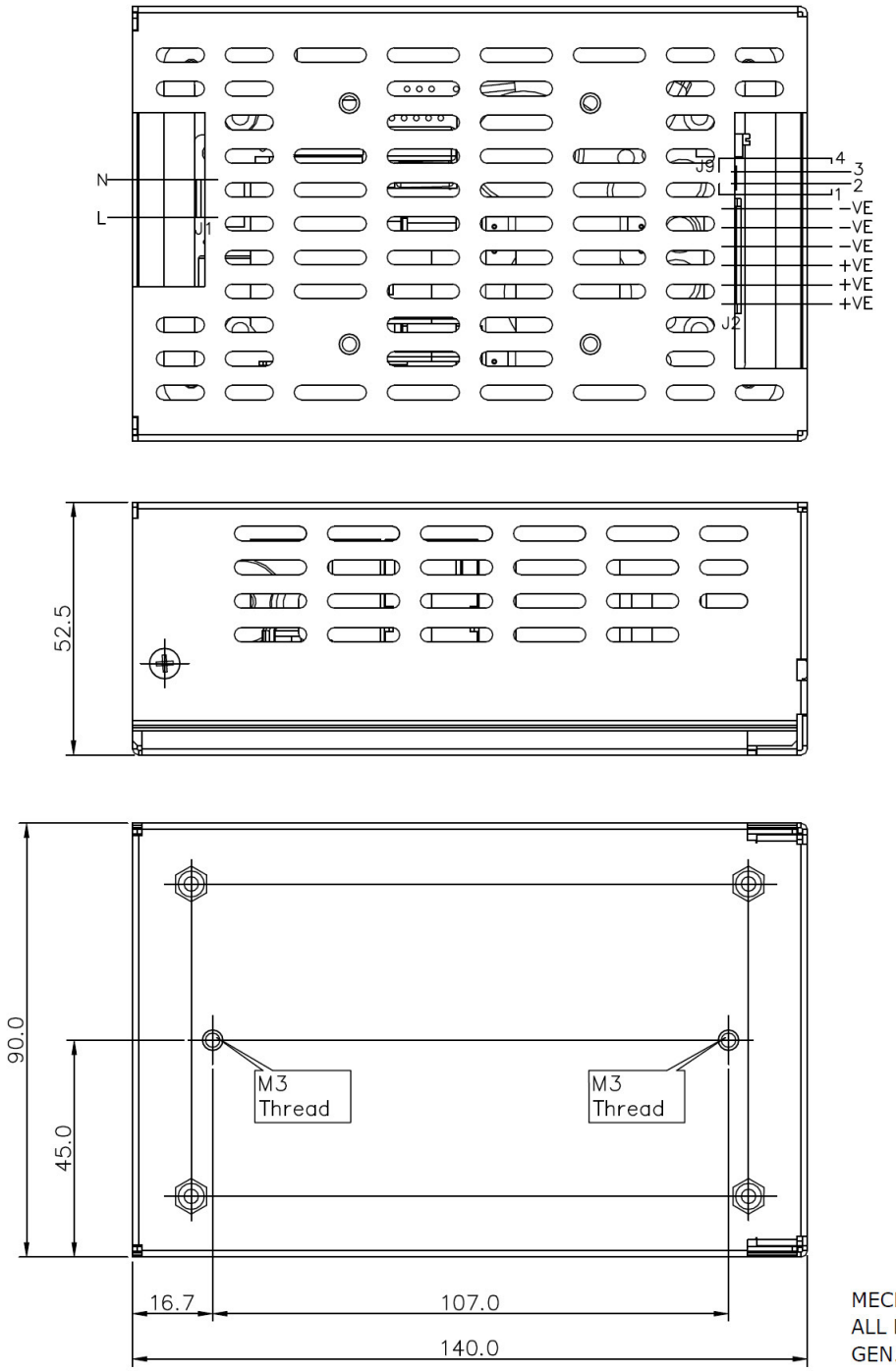

MECHANICAL OUTLINE DIMENSIONS
ALL DIMENSIONS ARE IN MM
GEN.TOLERANCE:+/-0.5 MM

Downloaded from Arrow.com.

Mechanical Drawing

FLS250 2.5 X 4.5 with Cover kit - Fan

NOTE:-
PLEASE REFER "FLS250 2.5X4.5 WITH 'L' CHANNEL" SPEC
FOR CONNECTOR DETAILS ON PAGE NO.13.

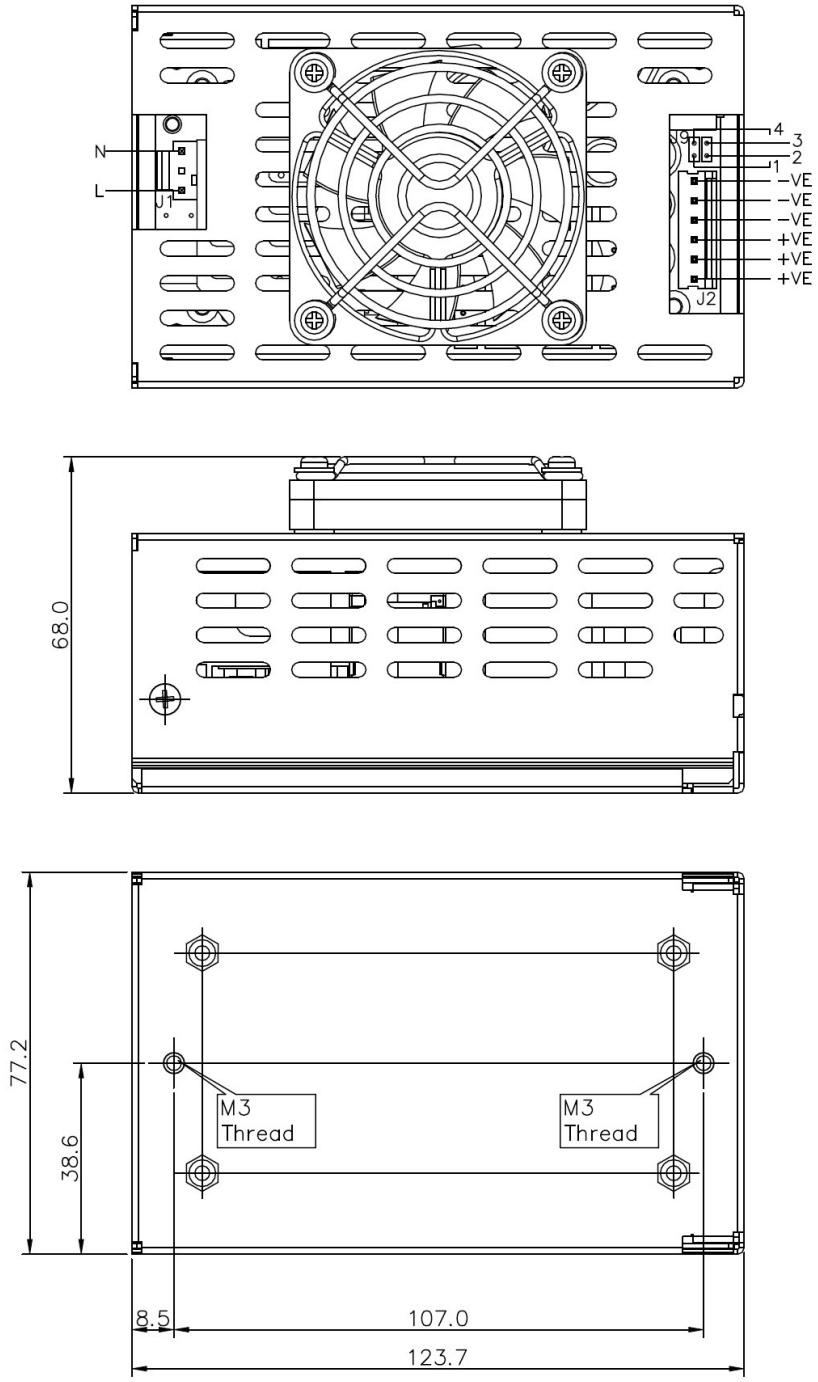

MECHANICAL OUTLINE DIMENSIONS
ALL DIMENSIONS ARE IN MM
GEN.TOLERANCE:+/-0.5 MM

Downloaded from Arrow.com.

Mechanical Drawing

FLS250 3 X 5 with Cover kit - Fan

NOTE:-
PLEASE REFER "FLS250 2.5X4.5 WITH 'L' CHANNEL" SPEC
FOR CONNECTOR DETAILS ON PAGE NO.13.

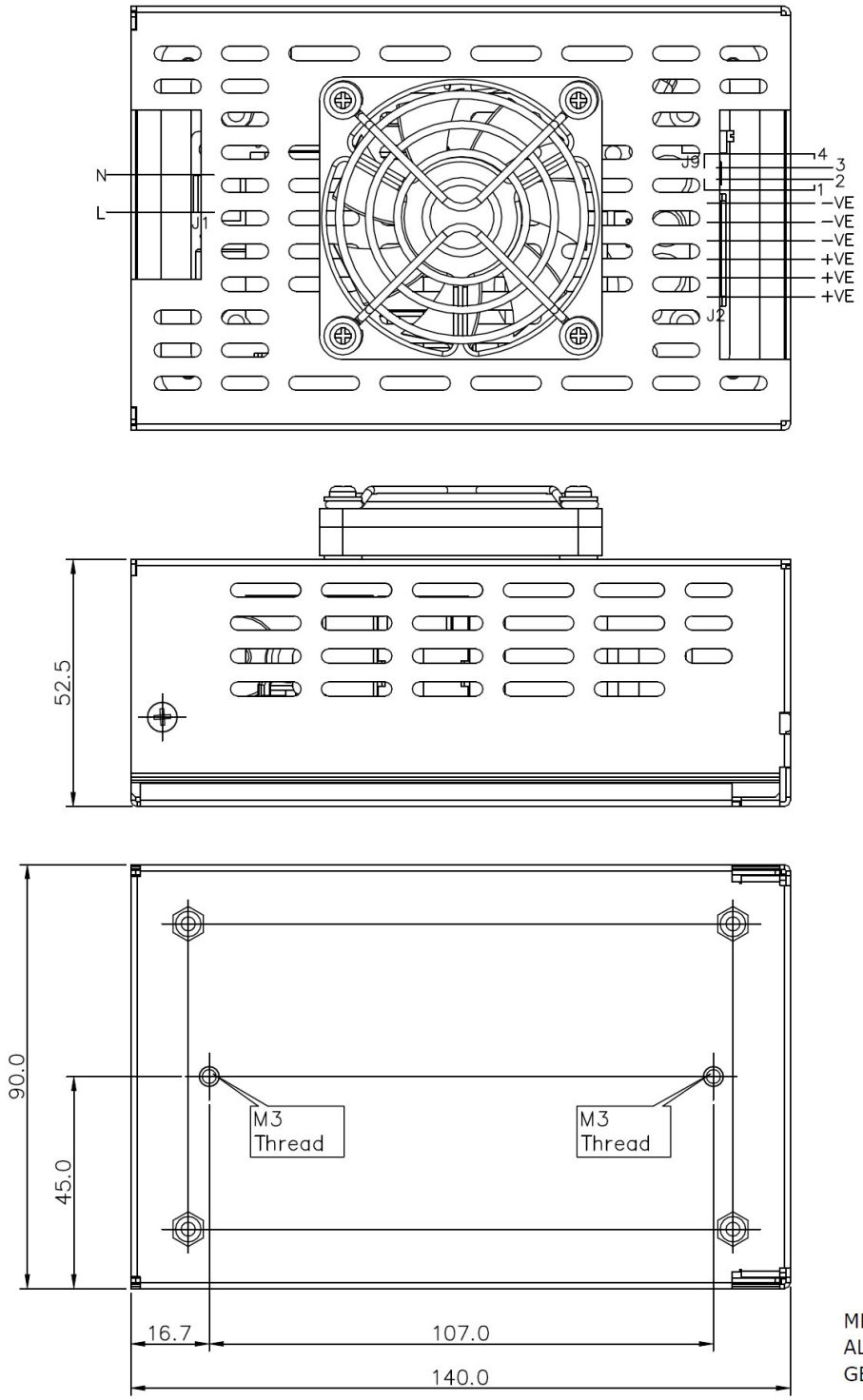

MECHANICAL OUTLINE DIMENSIONS
ALL DIMENSIONS ARE IN MM
GEN.TOLERANCE:+/-0.5 MM

Downloaded from Arrow.com.

Mechanical Drawing

COVER KIT WITH SIDE FAN

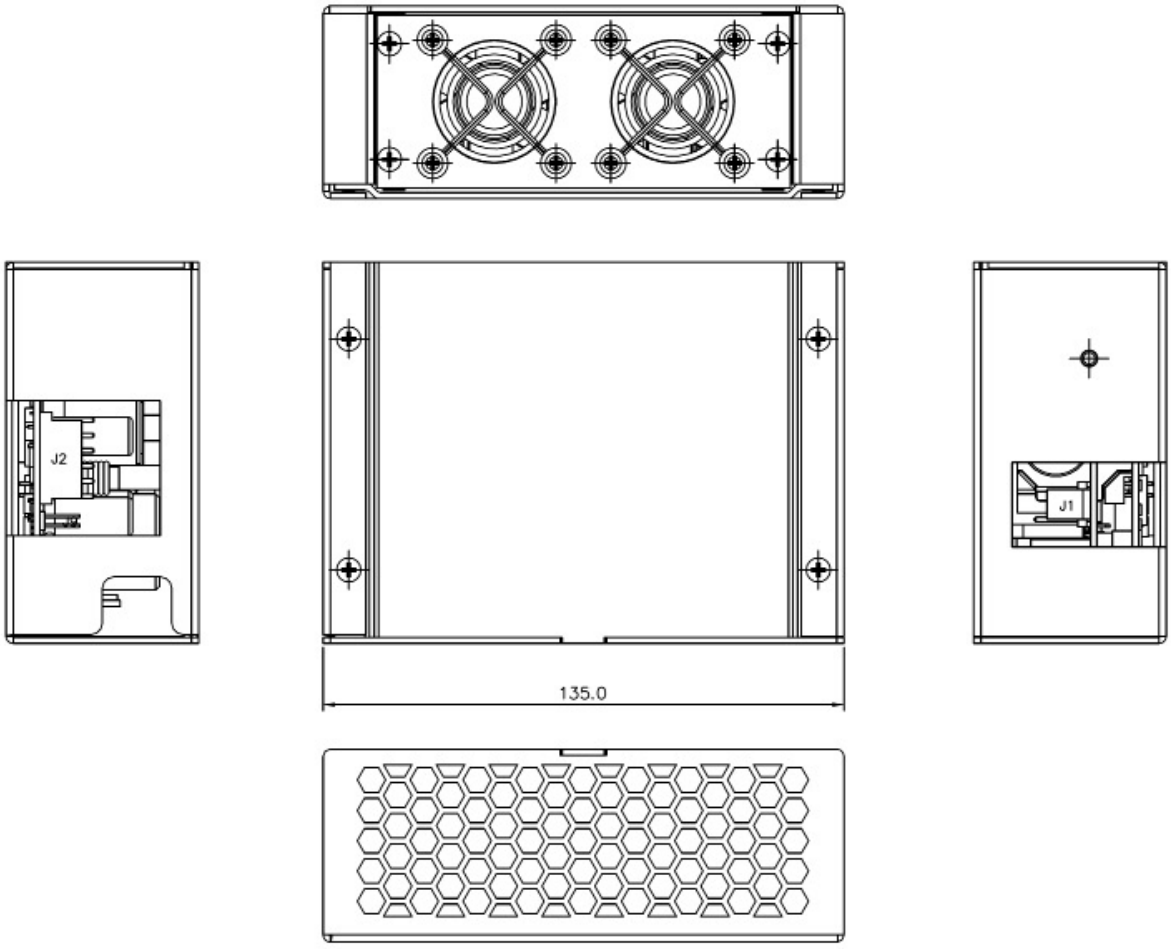

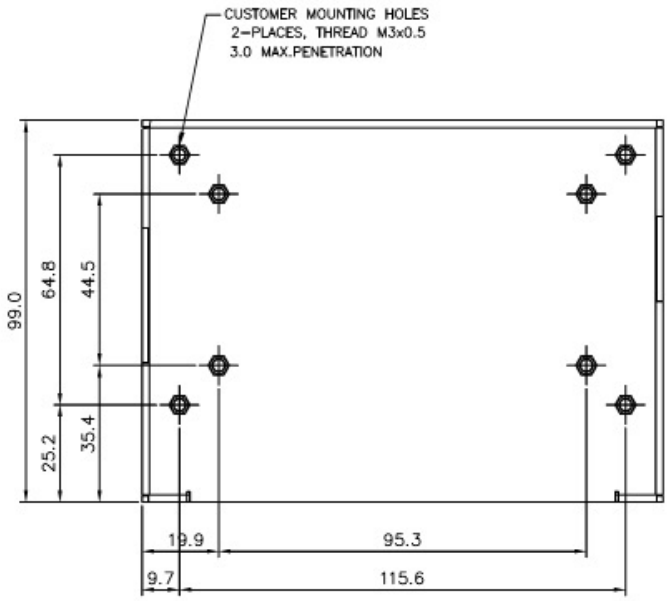

MECHANICAL OUTLINE DIMENSIONS
ALL DIMENSIONS ARE IN MM
GEN.TOLERANCE:+/-0.5 MM

Downloaded from Arrow.com.