THIS DRAWING IS UNPUBLISHED. RELEASED FOR PUBLICATION -
© COPYRIGHT - BY - TE CONNECTIVITY ALL RIGHTS RESERVED.

REVISIONS

P	LTR	DESCRIPTION	DATE	DWN	APVD
	A2	REVISED PER ECO-19-012700	15AUG2019	RS	LB

1. USE WITH 250 SERIES MARK II POSITIVE LOCK TERMINALS 2238155, 2238156 OR 170329
2. NOTE DELETED
3. SWITCH RECOMMENDED TAB LAYOUT TO BE WITHIN ±0.127 [.005] OF TE HOUSING CENTERLINES AND CONFORM TO .250 X .032 UL 310 DIMENSIONS

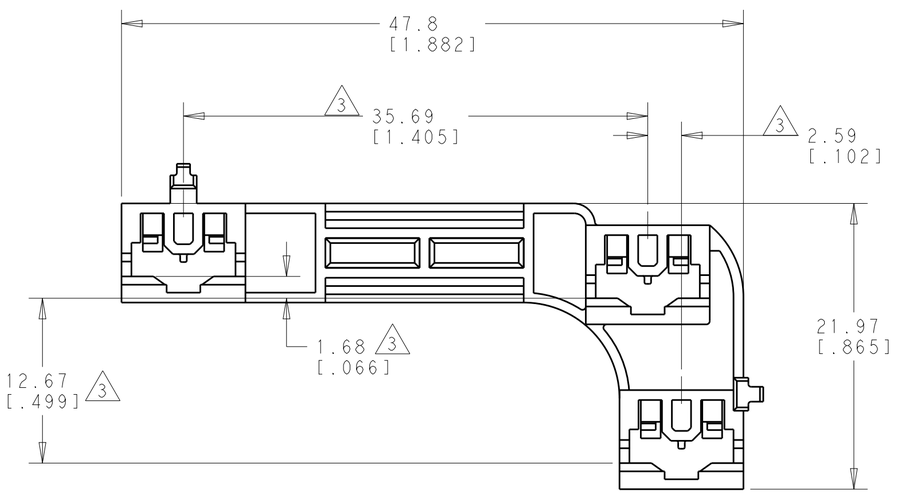

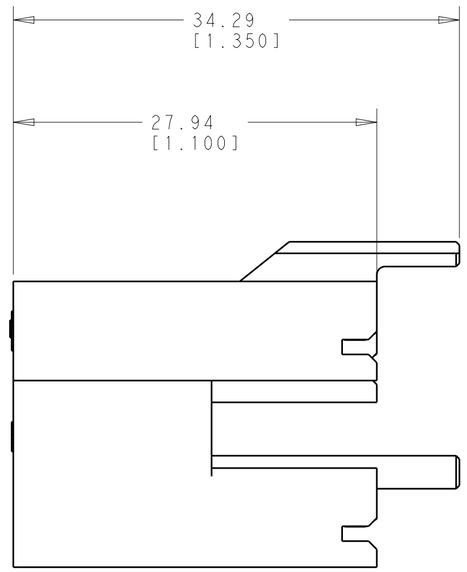

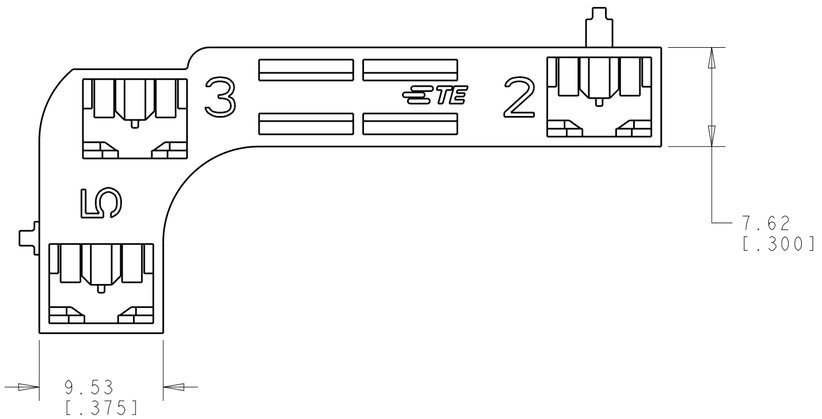

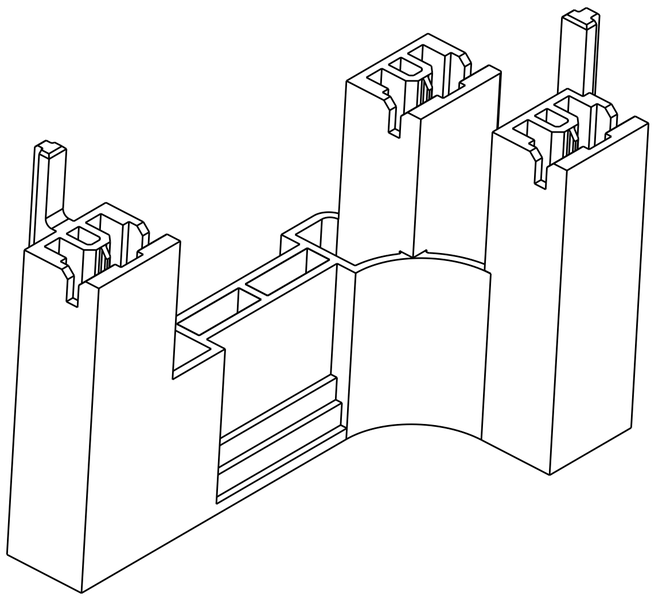

V0, 130C	BLACK	1969865-1
RATINGS	COLOR	PART NUMBER

THIS DRAWING IS A CONTROLLED DOCUMENT.

DIMENSIONS: mm[INCHES]

TOLERANCES UNLESS OTHERWISE SPECIFIED:
0 PLC ±-
1 PLC ±-
2 PLC ±0.38[.015]
3 PLC ±-
4 PLC ±-
ANGLES ±5°

MATERIAL: NYLON
FINISH: - -

DWN BASVESH WARAD 17FEB2017
CHK DIDONATO, MICHAEL 17FEB2017
APVD DIDONATO, MICHAEL 17FEB2017
PRODUCT SPEC -
APPLICATION SPEC -
WEIGHT -

TE Connectivity

NAME: 3 POS POSITIVE LOCK .250 MARK II -

SIZE	CAGE CODE	DRAWING NO	RESTRICTED TO
A2	00779	C-1969865	

CUSTOMER DRAWING | SCALE 3:1 | SHEET 1 OF 1 | REV A2

1471-9 (3/13)

Downloaded from Arrow.com.