T493 Space Grade High Reliability Alternative (HRA) MnO_2 (CWR11 Style)

Overview

KEMET's Space Grade capacitors are suitable for use by the defense/aerospace customers in high reliability space applications. These capacitors meet the requirements of MIL–PRF–55365 as well as MIL–STD–1580. These capacitors incorporate an intensive testing and screening protocol which is customizable depending upon customer's specific needs.

The full part number allows for designation of surge current level (10 cycles −55°C and +85°C before and/or after Weibull grading, 10 cycles +25°C), performance testing level (see chart for details on available options), ESR (low and standard), and termination finish (see description in each series). Fused versions are available for built-in circuit protection, as well as multi-anode designs for very low ESR values.

Benefits

- Standard case sizes per EIA 535BAAC
- Termination finishes options per MIL–PRF–55365: Gold Plated B, Hot Solder Dipped C, Solder Plated H, Solder Fused K
- Weibull Grading C (0.01%/1,000 hours)
- Surge current testing available per MIL–PRF–55365: 10 cycles at 25°C, 10 cycles at −55°C and +85°C
- Standard and low ESR options available

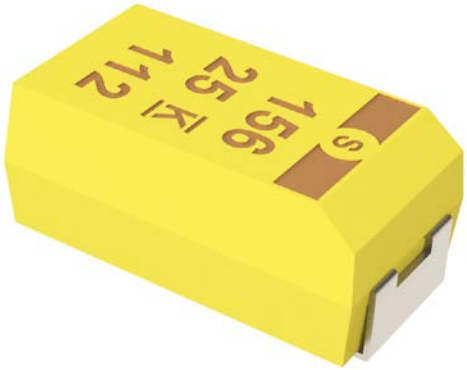

Applications

Typical applications include decoupling and filtering in defense and aerospace applications.

Environmental Compliance

- Halogen-free
- Epoxy compliant with UL94 V-0
- Molded Epoxy complies for outgassing testing under ASTM E 595.

© KEMET Electronics Corporation • One East Broward Boulevard
Fort Lauderdale, FL 33301 USA • 954-766-2800 • www.kemet.com

Downloaded from Arrow.com.

K-SIM

For a detailed analysis of specific part numbers, please visit ksim.kemet.com to access KEMET's K-SIM software. KEMET K-SIM is designed to simulate behavior of components with respect to frequency, ambient temperature, and DC bias levels.

Ordering Information

T	493	D	227	K	006	C	H	64	2	A	
Capacitor Class	Series	Case Size	Capacitance Code (pF)	Capacitance Tolerance	Voltage (V)	Failure Rate/ Design	Lead Material	Surge	ESR	Testing	Packaging (C-Spec)
T = Tantalum	CRW11 style - Space grade	A B C D X	First two digits represent significant figures. Third digit specifies number of zeros.	K = ±10% M = ±20%	004 = 4 006 = 6.3 010 = 10 016 = 16 020 = 20 025 = 25 035 = 35 050 = 50	C = 0.01% /1,000 hours	C = Hot solder dipped H = Standard solder-coated (SnPb 5% Pb minimum) B = Gold-plated K = Solder fused	61 = No Surge 62 = 10 Cycles after Weibull, 25°C 63 = 10 Cycles, after Weibull, −55°C and 85°C 64 = 10 Cycles before Weibull, −55°C and 85°C 65 = 10 Cycles before and after Weibull, −55°C and 85°C	1 = ESR - standard 2 = ESR - low	A = Option A B = Option B C* = Option C * Option C not available for A case size part numbers	Blank = 7" Reel 7280 = 13" Reel 7610 = Bulk bag 7640 = Bulk plastic box WAFL = Waffle pack

Performance Characteristics

Item	Performance Characteristics
Operating Temperature	−55°C to 125°C
Rated Capacitance Range	0.1 – 330 µF at 120 Hz/25°C
Capacitance Tolerance	K Tolerance (10%), M Tolerance (20%)
Rated Voltage Range	4 – 50 V
DF (120 Hz)	Refer to Part Number Electrical Specification Table
ESR (100 kHz)	Refer to Part Number Electrical Specification Table
Leakage Current	≤ 0.01 CV (mA) at rated voltage after 5 minutes

Downloaded from Arrow.com.

Qualification

Test	Condition		Characteristics			
Endurance	85°C at Rated Voltage, 2,000 hours 125°C at 2/3 Rated Voltage, 2,000 hours		Δ C/C	Within ±10% of initial value		
			DF	Within initial limits		
			DCL	Within 1.25 x initial limit		
			ESR	Within initial limits		
Storage Life	125°C at 0 Volts, 2,000 hours		Δ C/C	Within ±10% of initial value		
			DF	Within initial limits		
			DCL	Within 1.25 x initial limit		
			ESR	Within initial limits		
Thermal Shock	MIL–STD–202, Method 107, Condition B, mounted, –55C° to 125°C, 1,000 cycles		Δ C/C	Within ±5% of initial value		
			DF	Within initial limits		
			DCL	Within 1.25 x initial limit		
			ESR	Within initial limits		
Temperature Stability	Extreme temperature exposure at a succession of continuous steps at +25°C, –55°C, +25°C, +85°C, +125°C, +25°C		+25°C	–55°C	+85°C	+125°C
		Δ C/C	IL*	±10%	±10%	±20%
		DF	IL	IL	1.5 x IL	1.5 x IL
		DCL	IL	n/a	10 x IL	12 x IL
Surge Voltage	25°C and 85°C, 1.32 x Rated Voltage 1,000 cycles. (125°C, 1.2 x Rated Voltage)		Δ C/C	Within ±5% of initial value		
			DF	Within initial limits		
			DCL	Within initial limits		
			ESR	Within initial limits		
Mechanical Shock/ Vibration	MIL–STD–202, Method 213, Condition I, 100 G peak. MIL–STD–202, Method 204, Condition D, 10 Hz to 2,000 Hz, 20 G peak		Δ C/C	Within ±10% of initial value		
			DF	Within initial limits		
			DCL	Within initial limits		
Additional qualification tests per MIL–PRF–55365/8						

**IL = Initial Limit*

Certification

MIL–PRF–55365/8

Downloaded from Arrow.com.

Test Methods

Test Sequence	Test Method	Option A	Option B	Option C
100% Serialization	KEMET Standard			X
100% IR Reflow	MIL–PRF–55365	X	X	X
100% Thermal Shock	MIL–PRF–55365	X	X	X
100% Electrical Verification	KEMET Standard			X
Read and Record Attributes/Variables Data	KEMET Standard			X
100% Surge Current, Option C with 5% PDA Calculation	MIL–PRF–55365 with 5% PDA Calculation	X	X	X
100% Electrical Verification	KEMET Standard	X	X	X
Read and Record Attributes/Variables Data	KEMET Standard			X
100% Voltage Aging, 10 hours at 1.32 V_R	MIL–PRF–55365	X	X	X
100% Electrical Verification	KEMET Standard	X	X	X
100% Weibull Grading C	MIL–PRF–55365	X	X	X
100% Electrical Verification	KEMET Standard	X	X	X
Read and Record Attributes/Variables Data	KEMET Standard			X
100% Surge Current, Option A or B with 5% PDA Calculation	MIL–PRF–55365 with 5% PDA Calculation	X	X	X
100% Electrical Verification	KEMET Standard	X	X	X
Read and Record Attributes/Variables Data	KEMET Standard			X
3 Sigma Screening – All Electricals	KEMET Standard	X	X	X
Read and Record Attributes/Variables Data	KEMET Standard			X
Destructive Physical Analysis (DPA) (5 pieces- each lot)	MIL–PRF–55365	X	X	X
Group B Testing (22 pieces – each lot)	* See Note Below		X	X
Temperature Stability – sample	MIL–PRF–55365	X	X	X
Solderability – Sample	MIL–PRF–55365	X	X	X
Group C Testing (57 pieces – each Lot)**	MIL–PRF–55365		X	X
100% X-ray	MIL–PRF–55365	X		
100% X-ray – 2 Plane***	MIL–PRF–55365 and KEMET Standard		X	X
100% Physical Dimension Verification	MIL–PRF–55365	X	X	X
Data Pack				
Group A and C Summaries			X	X
2 Plane X-ray JPEG photos			X	X
DPA Report			X	X
Attributes/Variables Data for Cap/Df/DCL/ESR				X

X *= Included in test option*
** Group B Testing = 10,000 Cycles Surge Current, 85°C, 40% Vr*
*** Group C Post Moisture ESR limit = 1.25 initial limit*
**** 2 Plane X-ray = Top and side views, molded case wall thickness minimum 0.005" on all sides, negative/positive termination attachment criteria per MIL–STD–1580*

Downloaded from Arrow.com.

Electrical Characteristics

ESR vs. Frequency

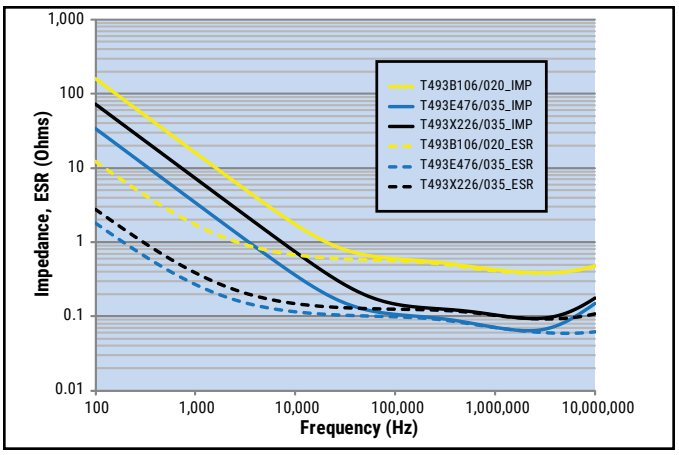

Capacitance vs. Frequency

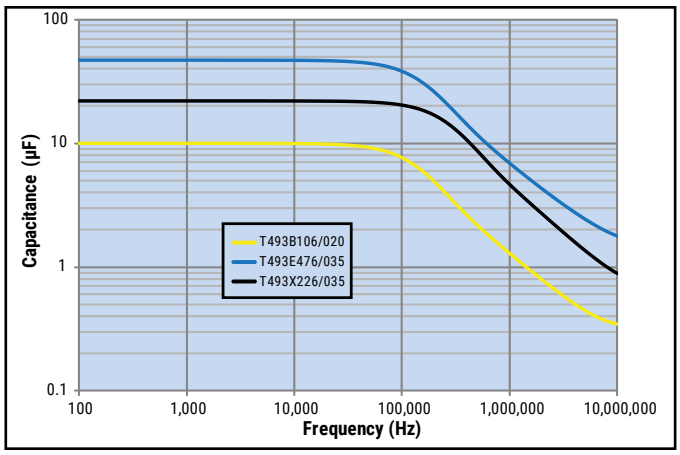

Dimensions – Millimeters (Inches)

Metric will govern

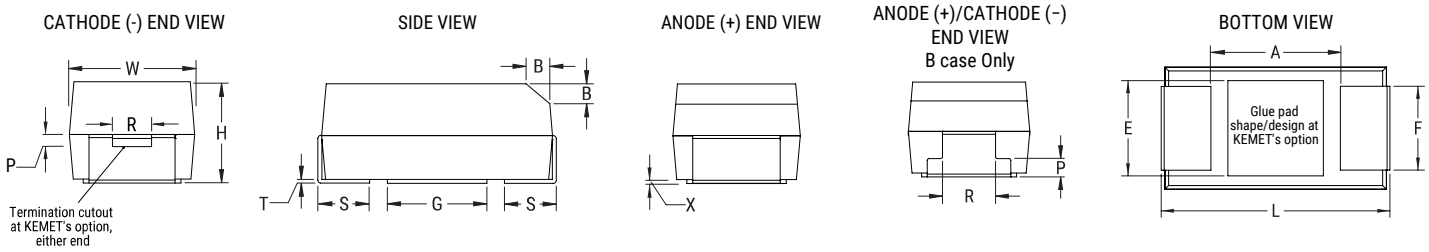

Case Size		Component													
KEMET	EIA	L	W	H	F±0.1 ±(0.004)	S±0.3 ±(0.012)	B±0.15 (Ref)±0.006	X (Ref)	P (Ref)	R (Ref)	T (Ref)	A (Min)	G (Ref)	E (Ref)	Net Weight (mg)
A	3216–18	3.2±0.2 (0.126±0.008)	1.6±0.2 (0.063±0.008)	1.6±0.2 (0.063±0.008)	1.2 (0.047)	0.8 (0.031)	0.4 (0.016)	0.10±0.10 (0.004±0.004)	0.4 (0.016)	0.4 (0.016)	0.13 (0.005)	0.8 (0.031)	1.1 (0.043)	1.3 (0.051)	58.97
B	3528–21	3.5±0.2 (0.138±0.008)	2.8±0.2 (0.110±0.008)	1.9±0.2 (0.075±0.008)	2.2 (0.087)	0.8 (0.031)	0.4 (0.016)	0.10±0.10 (0.004±0.004)	0.5 (0.020)	1.0 (0.039)	0.13 (0.005)	1.1 (0.043)	1.8 (0.071)	2.2 (0.087)	102.3
C	6032–28	6.0±0.3 (0.236±0.012)	3.2±0.3 (0.126±0.012)	2.5±0.3 (0.098±0.012)	2.2 (0.087)	1.3 (0.051)	0.5 (0.020)	0.10±0.10 (0.004±0.004)	0.9 (0.035)	1.0 (0.039)	0.13 (0.005)	2.5 (0.098)	2.8 (0.110)	2.4 (0.094)	224.2
D	7343–31	7.3±0.3 (0.287±0.012)	4.3±0.3 (0.169±0.012)	2.8±0.3 (0.110±0.012)	2.4 (0.094)	1.3 (0.051)	0.5 (0.020)	0.10±0.10 (0.004±0.004)	0.9 (0.035)	1.0 (0.039)	0.13 (0.005)	3.8 (0.150)	3.5 (0.138)	3.5 (0.138)	412.33
X	7343–43	7.3±0.3 (0.287±0.012)	4.3±0.3 (0.169±0.012)	4.0±0.3 (0.157±0.012)	2.4 (0.094)	1.3 (0.051)	0.5 (0.020)	0.10±0.10 (0.004±0.004)	1.7 (0.067)	1.0 (0.039)	0.13 (0.005)	3.8 (0.150)	3.5 (0.138)	3.5 (0.138)	652.04

Notes: (Ref) – Dimensions provided for reference only. No dimensions provided for B, P or R because low profile cases do not have a bevel or a notch. These weights are provided as a reference. If exact weights are needed, please contact your KEMET Sales Representative.

Downloaded from Arrow.com.

Table 1 – Ratings & Part Number Reference

Rated Voltage	Rated Cap	Case Code/ Case Size	KEMET Part Number	DC Leakage	DF	Standard ESR	Low ESR	Maximum Allowable Ripple Current (rms) Std ESR	Maximum Allowable Ripple Current (rms) Low ESR	Maximum Operating Temp	MSL
VDC @ 85°C	µF	KEMET/EIA	(See below for part options)	µA @ +25°C Maximum/ 5 Min	% @ +25°C 120 Hz Maximum	Ω @ +25°C 100 kHz Maximum	Ω @ +25°C 100 kHz Maximum	mA at +25°C 100 kHz	mA at +25°C 100 kHz	°C	Reflow Temp ≤ 260°C
4	2.2	A/3216–18	T493A225(1)004C(2)(3)(4)(6)	0.5	6.0	8.0	6.0	97	112	125	1
4	3.3	A/3216–18	T493A335(1)004C(2)(3)(4)(6)	0.5	6.0	8.0	4.0	97	137	125	1
4	4.7	A/3216–18	T493A475(1)004C(2)(3)(4)(6)	0.5	6.0	8.0	3.5	97	146	125	1
4	6.8	A/3216–18	T493A685(1)004C(2)(3)(4)(6)	0.5	6.0	6.0	3.0	112	158	125	1
4	6.8	B/3528-21	T493B685(1)004C(2)(3)(4)(5)	0.5	6.0	5.5	2.0	124	206	125	1
4	10.0	A/3216–18	T493A106(1)004C(2)(3)(4)(6)	0.5	6.0	6.0	2.0	112	194	125	1
4	10.0	B/3528-21	T493B106(1)004C(2)(3)(4)(5)	0.5	6.0	3.5	1.2	156	266	125	1
4	15.0	A/3216–18	T493A156(1)004C(2)(3)(4)(6)	0.6	6.0	4.0	1.5	137	224	125	1
4	15.0	B/3528-21	T493B156(1)004C(2)(3)(4)(5)	0.6	6.0	3.5	1.2	156	266	125	1
4	22.0	A/3216–18	T493A226(1)004C(2)(3)(4)(6)	0.9	6.0	4.0	1.5	137	224	125	1
4	22.0	B/3528-21	T493B226(1)004C(2)(3)(4)(5)	0.9	6.0	3.5	0.6	156	377	125	1
4	22.0	C/6032-28	T493C226(1)004C(2)(3)(4)(5)	0.9	6.0	1.8	0.5	247	469	125	1
4	33.0	B/3528-21	T493B336(1)004C(2)(3)(4)(5)	1.3	6.0	3.5	0.5	156	412	125	1
4	33.0	C/6032-28	T493C336(1)004C(2)(3)(4)(5)	1.3	6.0	1.8	0.5	247	469	125	1
4	47.0	B/3528-21	T493B476(1)004C(2)(3)(4)(5)	1.9	6.0	3.0	0.5	168	412	125	1
4	47.0	C/6032-28	T493C476(1)004C(2)(3)(4)(5)	1.9	6.0	1.8	0.5	247	469	125	1
4	68.0	B/3528-21	T493B686(1)004C(2)(3)(4)(5)	2.7	6.0	3.5	2.0	156	206	125	1
4	68.0	C/6032-28	T493C686(1)004C(2)(3)(4)(5)	2.7	6.0	1.6	0.25	262	663	125	1
4	68.0	D/7343-31	T493D686(1)004C(2)(3)(4)(5)	2.7	6.0	0.8	0.2	433	866	125	1
4	100.0	C/6032-28	T493C107(1)004C(2)(3)(4)(5)	4.0	8.0	1.2	0.2	303	742	125	1
4	100.0	D/7343-31	T493D107(1)004C(2)(3)(4)(5)	4.0	8.0	0.8	0.2	433	866	125	1
4	150	C/6032-28	T493C157(1)004C(2)(3)(4)(5)	6.0	8.0	1.2	0.3	303	606	125	1
4	150	D/7343-31	T493D157(1)004C(2)(3)(4)(5)	6.0	8.0	0.8	0.15	433	1000	125	1
4	220	D/7343-31	T493D227(1)004C(2)(3)(4)(5)	8.8	8.0	0.9	0.7	408	463	125	1
4	330	D/7343-31	T493D337(1)004C(2)(3)(4)(5)	13.2	8.0	0.7	0.15	463	1000	125	1
4	330	X/7343-43	T493X337(1)004C(2)(3)(4)(5)	13.2	8.0	0.5	0.2	574	908	125	1
6.3	1.5	A/3216–18	T493A155(1)006C(2)(3)(4)(6)	0.5	6.0	8.0	6.0	97	112	125	1
6.3	2.2	A/3216–18	T493A225(1)006C(2)(3)(4)(6)	0.5	6.0	8.0	6.0	97	112	125	1
6.3	3.3	A/3216–18	T493A335(1)006C(2)(3)(4)(6)	0.5	6.0	8.0	6.0	97	112	125	1
6.3	4.7	A/3216–18	T493A475(1)006C(2)(3)(4)(6)	0.5	6.0	6.0	3.5	112	146	125	1
6.3	4.7	B/3528-21	T493B475(1)006C(2)(3)(4)(5)	0.5	6.0	5.5	3.5	124	156	125	1
6.3	6.8	A/3216–18	T493A685(1)006C(2)(3)(4)(6)	0.5	6.0	6.0	2.0	112	194	125	1
6.3	6.8	B/3528-21	T493B685(1)006C(2)(3)(4)(5)	0.5	6.0	3.5	1.2	156	266	125	1
6.3	10.0	A/3216–18	T493A106(1)006C(2)(3)(4)(6)	0.6	6.0	4.0	2.0	137	194	125	1
6.3	10.0	B/3528-21	T493B106(1)006C(2)(3)(4)(5)	0.6	6.0	3.5	1.0	156	292	125	1
6.3	15.0	A/3216–18	T493A156(1)006C(2)(3)(4)(6)	0.9	6.0	4.0	1.5	137	224	125	1
6.3	15.0	B/3528-21	T493B156(1)006C(2)(3)(4)(5)	0.9	6.0	3.5	0.7	156	348	125	1
6.3	15.0	C/6032-28	T493C156(1)006C(2)(3)(4)(5)	0.9	6.0	1.8	0.6	247	428	125	1
6.3	22.0	B/3528-21	T493B226(1)006C(2)(3)(4)(5)	1.4	6.0	3.5	0.6	156	377	125	1
6.3	22.0	C/6032-28	T493C226(1)006C(2)(3)(4)(5)	1.4	6.0	1.8	0.5	247	469	125	1
6.3	33.0	B/3528-21	T493B336(1)006C(2)(3)(4)(5)	2.0	6.0	3.0	0.6	168	377	125	1
VDC @ 85°C	µF	KEMET/EIA	(See below for part options)	µA @ +25°C Maximum/ 5 Min	% @ +25°C 120 Hz Maximum	Ω @ +25°C 100 kHz Maximum	Ω @ +25°C 100 kHz Maximum	mA at +25°C 100 kHz	mA at +25°C 100 kHz	°C	Reflow Temp ≤ 260°C
Rated Voltage	Rated Cap	Case Code/ Case Size	KEMET Part Number	DC Leakage	DF	Standard ESR	Low ESR	Maximum Allowable Ripple Current (rms) Std ESR	Maximum Allowable Ripple Current (rms) Low ESR	Maximum Operating Temp	MSL

(1) To complete KEMET part number, insert M for ± 20% or K for ± 10%. Designates Capacitance tolerance.
(2) To complete KEMET part number, insert B = Gold Plated, C = Hot Solder Dipped, H = Solder Plated, or K = Solder Fused. Designates Termination Finish.
(3) To complete KEMET part number, insert 61 = No Surge, 62 = 10 cycles +25°C, 63 = 10 cycles −55°C +85°C after Weibull, 64 = 10 cycles −55°C +85°C before Weibull or 65 = Both. Designates Surge current option.
(4) To complete KEMET part number, insert 1 = Standard ESR, 2 = Low ESR. Designates ESR option.
(5) To complete KEMET part number, insert A = Option 1, B = Option 2 or C = Option 3. Designates Test Option. See Space Grade Test Methods chart for more information.
(6) To complete KEMET part number, insert A = Option 1 or B = Option 2. Designates Test Option. See Space Grade Test Methods chart for more information. Refer to Ordering Information for additional detail.

Downloaded from Arrow.com.

Table 1 – Ratings & Part Number Reference cont.

Rated Voltage	Rated Cap	Case Code/ Case Size	KEMET Part Number	DC Leakage	DF	Standard ESR	Low ESR	Maximum Allowable Ripple Current (rms) Std ESR	Maximum Allowable Ripple Current (rms) Low ESR	Maximum Operating Temp	MSL
VDC @ 85°C	µF	KEMET/EIA	(See below for part options)	µA @ +25°C Maximum/ 5 Min	% @ +25°C 120 Hz Maximum	Ω @ +25°C 100 kHz Maximum	Ω @ +25°C 100 kHz Maximum	mA at +25°C 100 kHz	mA at +25°C 100 kHz	°C	Reflow Temp ≤ 260°C
6.3	33.0	C/6032-28	T493C336(1)006C(2)(3)(4)(5)	2.0	6.0	1.8	0.3	247	606	125	1
6.3	47.0	B/3528-21	T493B476(1)006C(2)(3)(4)(5)	2.9	6.0	3.5	2.0	156	206	125	1
6.3	47.0	C/6032-28	T493C476(1)006C(2)(3)(4)(5)	2.9	6.0	1.6	0.25	262	663	125	1
6.3	47.0	D/7343-31	T493D476(1)006C(2)(3)(4)(5)	2.9	6.0	0.8	0.22	433	826	125	1
6.3	68.0	C/6032-28	T493C686(1)006C(2)(3)(4)(5)	4.1	6.0	1.2	0.2	303	742	125	1
6.3	68.0	D/7343-31	T493D686(1)006C(2)(3)(4)(5)	4.1	6.0	0.8	0.2	433	866	125	1
6.3	100.0	C/6032-28	T493C107(1)006C(2)(3)(4)(5)	6.0	8.0	1.2	0.3	303	606	125	1
6.3	100.0	D/7343-31	T493D107(1)006C(2)(3)(4)(5)	6.0	8.0	0.8	0.15	433	1000	125	1
6.3	150.0	D/7343-31	T493D157(1)006C(2)(3)(4)(5)	9.0	8.0	0.7	0.15	463	1000	125	1
6.3	220.0	D/7343-31	T493D227(1)006C(2)(3)(4)(5)	13.2	8.0	0.7	0.1	463	1225	125	1
6.3	220.0	X/7343-43	T493X227(1)006C(2)(3)(4)(5)	13.2	8.0	0.7	0.15	486	1049	125	1
6.3	330.0	D/7343-31	T493D337(1)006C(2)(3)(4)(5)	19.8	8.0	0.5	0.15	548	1000	125	1
6.3	330.0	X/7343-43	T493X337(1)006C(2)(3)(4)(5)	19.8	8.0	0.5	0.1	574	1285	125	1
10	1.0	A/3216–18	T493A105(1)010C(2)(3)(4)(6)	0.5	4.0	10.0	6.0	87	112	125	1
10	1.5	A/3216–18	T493A155(1)010C(2)(3)(4)(6)	0.5	6.0	8.0	6.0	97	112	125	1
10	2.2	A/3216–18	T493A225(1)010C(2)(3)(4)(6)	0.5	6.0	8.0	6.0	97	112	125	1
10	3.3	A/3216–18	T493A335(1)010C(2)(3)(4)(6)	0.5	6.0	6.0	4.0	112	137	125	1
10	3.3	B/3528-21	T493B335(1)010C(2)(3)(4)(5)	0.5	6.0	5.5	3.5	124	156	125	1
10	4.7	A/3216–18	T493A475(1)010C(2)(3)(4)(6)	0.5	6.0	6.0	3.0	112	158	125	1
10	4.7	B/3528-21	T493B475(1)010C(2)(3)(4)(5)	0.5	6.0	3.5	1.5	156	238	125	1
10	6.8	A/3216–18	T493A685(1)010C(2)(3)(4)(6)	0.7	6.0	6.0	3.0	112	158	125	1
10	6.8	B/3528-21	T493B685(1)010C(2)(3)(4)(5)	0.7	6.0	3.5	1.2	156	266	125	1
10	10.0	A/3216–18	T493A106(1)010C(2)(3)(4)(6)	1.0	6.0	4.0	1.8	137	204	125	1
10	10.0	B/3528-21	T493B106(1)010C(2)(3)(4)(5)	1.0	6.0	3.5	0.8	156	326	125	1
10	10.0	C/6032-28	T493C106(1)010C(2)(3)(4)(5)	1.0	6.0	1.8	0.6	247	428	125	1
10	15.0	B/3528-21	T493B156(1)010C(2)(3)(4)(5)	1.5	6.0	3.5	0.7	156	348	125	1
10	15.0	C/6032-28	T493C156(1)010C(2)(3)(4)(5)	1.5	6.0	1.8	0.5	247	469	125	1
10	22.0	B/3528-21	T493B226(1)010C(2)(3)(4)(5)	2.2	6.0	3.0	0.7	168	348	125	1
10	22.0	C/6032-28	T493C226(1)010C(2)(3)(4)(5)	2.2	6.0	1.8	0.4	247	524	125	1
10	33.0	C/6032-28	T493C336(1)010C(2)(3)(4)(5)	3.3	6.0	1.6	0.3	262	606	125	1
10	33.0	D/7343-31	T493D336(1)010C(2)(3)(4)(5)	3.3	6.0	0.8	0.25	433	775	125	1
10	47.0	C/6032-28	T493C476(1)010C(2)(3)(4)(5)	4.7	6.0	1.2	0.3	303	606	125	1
10	47.0	D/7343-31	T493D476(1)010C(2)(3)(4)(5)	4.7	6.0	0.8	0.22	433	826	125	1
10	68.0	C/6032-28	T493C686(1)010C(2)(3)(4)(5)	6.8	6.0	1.2	0.3	303	606	125	1
10	68.0	D/7343-31	T493D686(1)010C(2)(3)(4)(5)	6.8	6.0	0.8	0.2	433	866	125	1
10	68.0	X/7343-43	T493X686(1)010C(2)(3)(4)(5)	5.4	4.0	0.5	0.15	574	1049	125	1
10	100.0	D/7343-31	T493D107(1)010C(2)(3)(4)(5)	10.0	8.0	0.7	0.1	463	1225	125	1
10	150.0	D/7343-31	T493D157(1)010C(2)(3)(4)(5)	15.0	8.0	0.7	0.1	463	1225	125	1
10	150.0	X/7343-43	T493X157(1)010C(2)(3)(4)(5)	15.0	8.0	0.7	0.15	486	1049	125	1
10	220.0	D/7343-31	T493D227(1)010C(2)(3)(4)(5)	22.0	8.0	0.5	0.15	548	1000	125	1
10	220.0	X/7343-43	T493X227(1)010C(2)(3)(4)(5)	22.0	8.0	0.5	0.1	574	1285	125	1
VDC @ 85°C	µF	KEMET/EIA	(See below for part options)	µA @ +25°C Maximum/ 5 Min	% @ +25°C 120 Hz Maximum	Ω @ +25°C 100 kHz Maximum	Ω @ +25°C 100 kHz Maximum	mA at +25°C 100 kHz	mA at +25°C 100 kHz	°C	Reflow Temp ≤ 260°C
Rated Voltage	Rated Cap	Case Code/ Case Size	KEMET Part Number	DC Leakage	DF	Standard ESR	Low ESR	Maximum Allowable Ripple Current (rms) Std ESR	Maximum Allowable Ripple Current (rms) Low ESR	Maximum Operating Temp	MSL

(1) To complete KEMET part number, insert M for ± 20% or K for ± 10%. Designates Capacitance tolerance.
(2) To complete KEMET part number, insert B = Gold Plated, C = Hot Solder Dipped, H = Solder Plated, or K = Solder Fused. Designates Termination Finish.
(3) To complete KEMET part number, insert 61 = No Surge, 62 = 10 cycles +25°C, 63 = 10 cycles −55°C +85°C after Weibull, 64 = 10 cycles −55°C +85°C before Weibull or 65 = Both. Designates Surge current option.
(4) To complete KEMET part number, insert 1 = Standard ESR, 2 = Low ESR. Designates ESR option.
(5) To complete KEMET part number, insert A = Option 1, B = Option 2 or C = Option 3. Designates Test Option. See Space Grade Test Methods chart for more information.
(6) To complete KEMET part number, insert A = Option 1 or B = Option 2. Designates Test Option. See Space Grade Test Methods chart for more information. Refer to Ordering Information for additional detail.

Downloaded from Arrow.com.

Table 1 – Ratings & Part Number Reference cont.

Rated Voltage	Rated Cap	Case Code/ Case Size	KEMET Part Number	DC Leakage	DF	Standard ESR	Low ESR	Maximum Allowable Ripple Current (rms) Std ESR	Maximum Allowable Ripple Current (rms) Low ESR	Maximum Operating Temp	MSL
VDC @ 85°C	µF	KEMET/EIA	(See below for part options)	µA @ +25°C Maximum/ 5 Min	% @ +25°C 120 Hz Maximum	Ω @ +25°C 100 kHz Maximum	Ω @ +25°C 100 kHz Maximum	mA at +25°C 100 kHz	mA at +25°C 100 kHz	°C	Reflow Temp ≤ 260°C
10	330.0	X/7343-43	T493X337(1)010C(2)(3)(4)(5)	33.0	10.0	0.5	0.1	574	1285	125	1
16	0.68	A/3216–18	T493A684(1)016C(2)(3)(4)(6)	1.1	6.0	12.0	8.0	79	97	125	1
16	1.0	A/3216–18	T493A105(1)016C(2)(3)(4)(6)	0.5	4.0	10.0	6.0	87	112	125	1
16	1.5	A/3216–18	T493A155(1)016C(2)(3)(4)(6)	0.5	6.0	8.0	6.0	97	112	125	1
16	2.2	A/3216–18	T493A225(1)016C(2)(3)(4)(6)	0.5	6.0	6.0	4.0	112	137	125	1
16	3.3	B/3528-21	T493B335(1)016C(2)(3)(4)(5)	0.5	6.0	3.5	2.0	156	206	125	1
16	4.7	B/3528-21	T493B475(1)016C(2)(3)(4)(5)	0.8	6.0	3.5	1.5	156	238	125	1
16	6.8	B/3528-21	T493B685(1)016C(2)(3)(4)(5)	1.1	6.0	3.5	1.2	156	266	125	1
16	6.8	C/6032-28	T493C685(1)016C(2)(3)(4)(5)	1.1	6.0	1.9	0.8	241	371	125	1
16	10.0	C/6032-28	T493C106(1)016C(2)(3)(4)(5)	1.6	6.0	1.8	0.6	247	428	125	1
16	15.0	C/6032-28	T493C156(1)016C(2)(3)(4)(5)	2.4	6.0	1.8	0.4	247	524	125	1
16	22.0	C/6032-28	T493C226(1)016C(2)(3)(4)(5)	3.6	6.0	1.6	0.35	262	561	125	1
16	22.0	D/7343-31	T493D226(1)016C(2)(3)(4)(5)	3.6	6.0	0.8	0.25	433	775	125	1
16	33.0	D/7343-31	T493D336(1)016C(2)(3)(4)(5)	5.3	6.0	0.8	0.25	433	775	125	1
16	47.0	D/7343-31	T493D476(1)016C(2)(3)(4)(5)	7.5	6.0	0.8	0.2	433	866	125	1
16	68.0	D/7343-31	T493D686(1)016C(2)(3)(4)(5)	10.9	6.0	0.7	0.15	463	1000	125	1
16	100.0	X/7343-43	T493X107(1)016C(2)(3)(4)(5)	16.0	8.0	0.7	0.1	486	1285	125	1
20	0.47	A/3216–18	T493A474(1)020C(2)(3)(4)(6)	0.5	4.0	14.0	9.0	73	91	125	1
20	0.68	A/3216–18	T493A684(1)020C(2)(3)(4)(6)	0.5	4.0	12.0	8.0	79	97	125	1
20	1.0	A/3216–18	T493A105(1)020C(2)(3)(4)(6)	0.5	4.0	10.0	5.5	87	117	125	1
20	1.5	B/3528-21	T493B155(1)020C(2)(3)(4)(5)	0.5	6.0	6.0	4.0	119	146	125	1
20	2.2	B/3528-21	T493B225(1)020C(2)(3)(4)(5)	0.5	6.0	3.5	1.5	156	238	125	1
20	3.3	B/3528-21	T493B335(1)020C(2)(3)(4)(5)	0.7	6.0	3.5	1.3	156	256	125	1
20	4.7	C/6032-28	T493C475(1)020C(2)(3)(4)(5)	1.0	6.0	2.4	0.6	214	428	125	1
20	6.8	C/6032-28	T493C685(1)020C(2)(3)(4)(5)	1.4	6.0	1.9	0.6	241	428	125	1
20	10.0	C/6032-28	T493C106(1)020C(2)(3)(4)(5)	2.0	6.0	1.8	0.5	247	469	125	1
20	15.0	C/6032-28	T493C156(1)020C(2)(3)(4)(5)	3.0	6.0	1.7	0.4	254	524	125	1
20	15.0	D/7343-31	T493D156(1)020C(2)(3)(4)(5)	3.0	6.0	1.0	0.35	387	655	125	1
20	22.0	D/7343-31	T493D226(1)020C(2)(3)(4)(5)	4.4	6.0	0.8	0.3	433	707	125	1
20	33.0	D/7343-31	T493D336(1)020C(2)(3)(4)(5)	6.6	6.0	0.8	0.2	433	866	125	1
20	47.0	X/7343-43	T493X476(1)020C(2)(3)(4)(5)	7.5	4.0	0.7	0.15	486	1049	125	1
20	68.0	X/7343-43	T493X686(1)020C(2)(3)(4)(5)	13.6	6.0	0.7	0.15	486	1049	125	1
25	0.33	A/3216–18	T493A334(1)025C(2)(3)(4)(6)	0.5	4.0	15.0	10.0	71	87	125	1
25	0.47	A/3216–18	T493A474(1)025C(2)(3)(4)(6)	0.5	4.0	14.0	9.0	73	91	125	1
25	0.68	A/3216–18	T493A684(1)025C(2)(3)(4)(6)	0.5	4.0	10.0	6.0	87	112	125	1
25	0.68	B/3528-21	T493B684(1)025C(2)(3)(4)(5)	0.5	4.0	7.5	5.5	106	124	125	1
25	1.0	A/3216–18	T493A105(1)025C(2)(3)(4)(6)	0.5	4.0	8.0	4.0	97	137	125	1
25	1.0	B/3528-21	T493B105(1)025C(2)(3)(4)(5)	0.5	4.0	5.0	2.0	130	206	125	1
25	1.5	A/3216–18	T493A155(1)025C(2)(3)(4)(6)	0.5	6.0	10.0	3.0	87	158	125	1
25	1.5	B/3528-21	T493B155(1)025C(2)(3)(4)(5)	0.5	6.0	5.0	1.5	130	238	125	1
25	2.2	B/3528-21	T493B225(1)025C(2)(3)(4)(5)	0.6	6.0	4.5	1.2	137	266	125	1
VDC @ 85°C	µF	KEMET/EIA	(See below for part options)	µA @ +25°C Maximum/ 5 Min	% @ +25°C 120 Hz Maximum	Ω @ +25°C 100 kHz Maximum	Ω @ +25°C 100 kHz Maximum	mA at +25°C 100 kHz	mA at +25°C 100 kHz	°C	Reflow Temp ≤ 260°C
Rated Voltage	Rated Cap	Case Code/ Case Size	KEMET Part Number	DC Leakage	DF	Standard ESR	Low ESR	Maximum Allowable Ripple Current (rms) Std ESR	Maximum Allowable Ripple Current (rms) Low ESR	Maximum Operating Temp	MSL

(1) To complete KEMET part number, insert M for ± 20% or K for ± 10%. Designates Capacitance tolerance.
(2) To complete KEMET part number, insert B = Gold Plated, C = Hot Solder Dipped, H = Solder Plated, or K = Solder Fused. Designates Termination Finish.
(3) To complete KEMET part number, insert 61 = No Surge, 62 = 10 cycles +25°C, 63 = 10 cycles −55°C +85°C after Weibull, 64 = 10 cycles −55°C +85°C before Weibull or 65 = Both. Designates Surge current option.
(4) To complete KEMET part number, insert 1 = Standard ESR, 2 = Low ESR. Designates ESR option.
(5) To complete KEMET part number, insert A = Option 1, B = Option 2 or C = Option 3. Designates Test Option. See Space Grade Test Methods chart for more information.
(6) To complete KEMET part number, insert A = Option 1 or B = Option 2. Designates Test Option. See Space Grade Test Methods chart for more information. Refer to Ordering Information for additional detail.

Downloaded from Arrow.com.

Table 1 – Ratings & Part Number Reference cont.

Rated Voltage	Rated Cap	Case Code/ Case Size	KEMET Part Number	DC Leakage	DF	Standard ESR	Low ESR	Maximum Allowable Ripple Current (rms) Std ESR	Maximum Allowable Ripple Current (rms) Low ESR	Maximum Operating Temp	MSL
VDC @ 85°C	µF	KEMET/EIA	(See below for part options)	µA @ +25°C Maximum/ 5 Min	% @ +25°C 120 Hz Maximum	Ω @ +25°C 100 kHz Maximum	Ω @ +25°C 100 kHz Maximum	mA at +25°C 100 kHz	mA at +25°C 100 kHz	°C	Reflow Temp ≤ 260°C
25	2.2	C/6032-28	T493C225(1)025C(2)(3)(4)(5)	0.6	6.0	3.5	2.2	177	224	125	1
25	3.3	B/3528-21	T493B335(1)025C(2)(3)(4)(5)	0.9	6.0	3.5	2.0	156	206	125	1
25	3.3	C/6032-28	T493C335(1)025C(2)(3)(4)(5)	0.9	6.0	2.5	1.2	210	303	125	1
25	4.7	C/6032-28	T493C475(1)025C(2)(3)(4)(5)	1.2	6.0	2.4	0.6	214	428	125	1
25	6.8	C/6032-28	T493C685(1)025C(2)(3)(4)(5)	1.7	6.0	1.9	0.6	241	428	125	1
25	6.8	D/7343-31	T493D685(1)025C(2)(3)(4)(5)	1.7	6.0	1.4	1.0	327	387	125	1
25	10.0	C/6032-28	T493C106(1)025C(2)(3)(4)(5)	2.5	6.0	1.5	0.5	271	469	125	1
25	10.0	D/7343-31	T493D106(1)025C(2)(3)(4)(5)	2.5	6.0	1.0	0.4	387	612	125	1
25	15.0	C/6032-28	T493C156(1)025C(2)(3)(4)(5)	3.8	6.0	1.5	0.9	271	350	125	1
25	15.0	D/7343-31	T493D156(1)025C(2)(3)(4)(5)	3.8	6.0	1.0	0.35	387	655	125	1
25	15.0	X/7343-43	T493X156(1)025C(2)(3)(4)(5)	3.0	6.0	0.7	0.2	486	908	125	1
25	22.0	D/7343-31	T493D226(1)025C(2)(3)(4)(5)	5.5	6.0	0.8	0.2	433	866	125	1
25	22.0	X/7343-43	T493X226(1)025C(2)(3)(4)(5)	4.4	4.0	0.7	0.23	486	847	125	1
25	33.0	X/7343-43	T493X336(1)025C(2)(3)(4)(5)	8.3	6.0	0.7	0.3	486	742	125	1
35	0.10	A/3216–18	T493A104(1)035C(2)(3)(4)(6)	0.5	4.0	20.0	10.0	61	87	125	1
35	0.15	A/3216–18	T493A154(1)035C(2)(3)(4)(6)	0.5	4.0	19.0	6.0	63	112	125	1
35	0.22	A/3216–18	T493A224(1)035C(2)(3)(4)(6)	0.5	4.0	18.0	6.0	65	112	125	1
35	0.33	A/3216–18	T493A334(1)035C(2)(3)(4)(6)	0.5	4.0	15.0	6.0	71	112	125	1
35	0.47	A/3216–18	T493A474(1)035C(2)(3)(4)(6)	0.5	4.0	14.0	4.0	73	137	125	1
35	0.47	B/3528-21	T493B474(1)035C(2)(3)(4)(5)	0.5	4.0	8.0	2.5	97	173	125	1
35	0.68	A/3216–18	T493A684(1)035C(2)(3)(4)(6)	0.5	4.0	10.0	6.0	87	112	125	1
35	0.68	B/3528-21	T493B684(1)035C(2)(3)(4)(5)	0.5	4.0	6.5	2.5	114	184	125	1
35	1.0	B/3528-21	T493B105(1)035C(2)(3)(4)(5)	0.5	4.0	5.0	2.0	130	206	125	1
35	1.5	B/3528-21	T493B155(1)035C(2)(3)(4)(5)	0.5	6.0	5.0	3.0	130	168	125	1
35	1.5	C/6032-28	T493C155(1)035C(2)(3)(4)(5)	0.5	6.0	4.5	2.5	156	210	125	1
35	2.2	B/3528-21	T493B225(1)035C(2)(3)(4)(5)	0.8	6.0	4.0	2.5	146	184	125	1
35	2.2	C/6032-28	T493C225(1)035C(2)(3)(4)(5)	0.8	6.0	3.5	1.5	177	271	125	1
35	3.3	C/6032-28	T493C335(1)035C(2)(3)(4)(5)	1.2	6.0	2.5	0.8	210	371	125	1
35	4.7	C/6032-28	T493C475(1)035C(2)(3)(4)(5)	1.7	6.0	2.5	0.6	210	428	125	1
35	4.7	D/7343-31	T493D475(1)035C(2)(3)(4)(5)	1.7	6.0	1.5	0.7	316	463	125	1
35	6.8	D/7343-31	T493D685(1)035C(2)(3)(4)(5)	2.4	6.0	1.3	0.5	340	548	125	1
35	10.0	D/7343-31	T493D106(1)035C(2)(3)(4)(5)	3.5	6.0	1.0	0.3	387	707	125	1
35	10.0	X/7343-43	T493X106(1)035C(2)(3)(4)(5)	2.8	4.0	0.9	0.25	428	812	125	1
35	15.0	D/7343-31	T493D156(1)035C(2)(3)(4)(5)	5.3	6.0	0.8	0.3	433	707	125	1
35	15.0	X/7343-43	T493X156(1)035C(2)(3)(4)(5)	5.3	6.0	0.9	0.3	428	742	125	1
35	22.0	X/7343-43	T493X226(1)035C(2)(3)(4)(5)	7.7	6.0	0.7	0.3	486	742	125	1
35	33.0	D/7343-31	T493D336(1)035C(2)(3)(4)(5)	11.6	6.0	0.3	N/A	707	N/A	125	1
50	0.10	A/3216–18	T493A104(1)050C(2)(3)(4)(6)	0.5	4.0	20.0	10.0	61	87	125	1
50	0.15	A/3216–18	T493A154(1)050C(2)(3)(4)(6)	0.5	4.0	19.0	10.0	63	87	125	1
50	0.15	B/3528-21	T493B154(1)050C(2)(3)(4)(5)	0.5	4.0	16.0	10.0	73	92	125	1
50	0.22	B/3528-21	T493B224(1)050C(2)(3)(4)(5)	0.5	4.0	14.0	10.0	78	92	125	1
VDC @ 85°C	µF	KEMET/EIA	(See below for part options)	µA @ +25°C Maximum/ 5 Min	% @ +25°C 120 Hz Maximum	Ω @ +25°C 100 kHz Maximum	Ω @ +25°C 100 kHz Maximum	mA at +25°C 100 kHz	mA at +25°C 100 kHz	°C	Reflow Temp ≤ 260°C
Rated Voltage	Rated Cap	Case Code/ Case Size	KEMET Part Number	DC Leakage	DF	Standard ESR	Low ESR	Maximum Allowable Ripple Current (rms) Std ESR	Maximum Allowable Ripple Current (rms) Low ESR	Maximum Operating Temp	MSL

(1) To complete KEMET part number, insert M for ± 20% or K for ± 10%. Designates Capacitance tolerance.
(2) To complete KEMET part number, insert B = Gold Plated, C = Hot Solder Dipped, H = Solder Plated, or K = Solder Fused. Designates Termination Finish.
(3) To complete KEMET part number, insert 61 = No Surge, 62 = 10 cycles +25°C, 63 = 10 cycles −55°C +85°C after Weibull, 64 = 10 cycles −55°C +85°C before Weibull or 65 = Both. Designates Surge current option.
(4) To complete KEMET part number, insert 1 = Standard ESR, 2 = Low ESR. Designates ESR option.
(5) To complete KEMET part number, insert A = Option 1, B = Option 2 or C = Option 3. Designates Test Option. See Space Grade Test Methods chart for more information.
(6) To complete KEMET part number, insert A = Option 1 or B = Option 2. Designates Test Option. See Space Grade Test Methods chart for more information. Refer to Ordering Information for additional detail.

Downloaded from Arrow.com.

Table 1 – Ratings & Part Number Reference cont.

Rated Voltage	Rated Cap	Case Code/ Case Size	KEMET Part Number	DC Leakage	DF	Standard ESR	Low ESR	Maximum Allowable Ripple Current (rms) Std ESR	Maximum Allowable Ripple Current (rms) Low ESR	Maximum Operating Temp	MSL
VDC @ 85°C	µF	KEMET/EIA	(See below for part options)	µA @ +25°C Maximum/ 5 Min	% @ +25°C 120 Hz Maximum	Ω @ +25°C 100 kHz Maximum	Ω @ +25°C 100 kHz Maximum	mA at +25°C 100 kHz	mA at +25°C 100 kHz	°C	Reflow Temp ≤ 260°C
50	0.33	B/3528-21	T493B334(1)050C(2)(3)(4)(5)	0.5	4.0	10.0	2.5	92	184	125	1
50	0.47	B/3528-21	T493B474(1)050C(2)(3)(4)(5)	0.5	4.0	9.0	2.0	97	206	125	1
50	0.47	C/6032-28	T493C474(1)050C(2)(3)(4)(5)	0.5	4.0	8.0	1.8	117	247	125	1
50	0.68	C/6032-28	T493C684(1)050C(2)(3)(4)(5)	0.5	4.0	7.0	1.6	125	262	125	1
50	1.0	C/6032-28	T493C105(1)050C(2)(3)(4)(5)	0.5	4.0	5.5	1.6	141	262	125	1
50	1.5	C/6032-28	T493C155(1)050C(2)(3)(4)(5)	0.8	6.0	4.5	1.5	156	271	125	1
50	1.5	D/7343-31	T493D155(1)050C(2)(3)(4)(5)	0.8	6.0	3.5	1.0	207	387	125	1
50	2.2	C/6032-28	T493C225(1)050C(2)(3)(4)(5)	1.1	6.0	3.5	1.5	177	271	125	1
50	2.2	D/7343-31	T493D225(1)050C(2)(3)(4)(5)	1.1	6.0	2.5	0.8	245	433	125	1
50	3.3	D/7343-31	T493D335(1)050C(2)(3)(4)(5)	1.7	6.0	2.0	0.8	274	433	125	1
50	4.7	D/7343-31	T493D475(1)050C(2)(3)(4)(5)	2.4	6.0	1.5	0.6	316	500	125	1
50	4.7	X/7343-43	T493X475(1)050C(2)(3)(4)(5)	1.9	4.0	0.9	0.3	428	742	125	1
50	6.8	X/7343-43	T493X685(1)050C(2)(3)(4)(5)	3.5	6.0	1.0	0.5	406	574	125	1
50	10.0	X/7343-43	T493X106(1)050C(2)(3)(4)(5)	5.0	6.0	0.7	0.4	486	642	125	1
VDC @ 85°C	µF	KEMET/EIA	(See below for part options)	µA @ +25°C Maximum/ 5 Min	% @ +25°C 120 Hz Maximum	Ω @ +25°C 100 kHz Maximum	Ω @ +25°C 100 kHz Maximum	mA at +25°C 100 kHz	mA at +25°C 100 kHz	°C	Reflow Temp ≤ 260°C
Rated Voltage	Rated Cap	Case Code/ Case Size	KEMET Part Number	DC Leakage	DF	Standard ESR	Low ESR	Maximum Allowable Ripple Current (rms) Std ESR	Maximum Allowable Ripple Current (rms) Low ESR	Maximum Operating Temp	MSL

(1) To complete KEMET part number, insert M for ± 20% or K for ± 10%. Designates Capacitance tolerance.
(2) To complete KEMET part number, insert B = Gold Plated, C = Hot Solder Dipped, H = Solder Plated, or K = Solder Fused. Designates Termination Finish.
(3) To complete KEMET part number, insert 61 = No Surge, 62 = 10 cycles +25°C, 63 = 10 cycles −55°C +85°C after Weibull, 64 = 10 cycles −55°C +85°C before Weibull or 65 = Both. Designates Surge current option.
(4) To complete KEMET part number, insert 1 = Standard ESR, 2 = Low ESR. Designates ESR option.
(5) To complete KEMET part number, insert A = Option 1, B = Option 2 or C = Option 3. Designates Test Option. See Space Grade Test Methods chart for more information.
(6) To complete KEMET part number, insert A = Option 1 or B = Option 2. Designates Test Option. See Space Grade Test Methods chart for more information. Refer to Ordering Information for additional detail.

Downloaded from Arrow.com.

Recommended Voltage Derating Guidelines

	−55°C to 85°C	85°C to 125°C
% Change in Working DC Voltage with Temperature	V_R	67% of V_R
Recommended Maximum Application Voltage	50% of V_R	33% of V_R

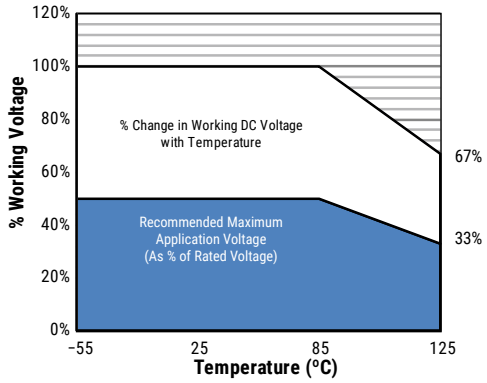

Ripple Current/Ripple Voltage

Permissible AC ripple voltage and current are related to equivalent series resistance (ESR) and the power dissipation capabilities of the device. Permissible AC ripple voltage which may be applied is limited by two criteria:

1. The positive peak AC voltage plus the DC bias voltage, if any, must not exceed the DC voltage rating of the capacitor.
2. The negative peak AC voltage in combination with bias voltage, if any, must not exceed the allowable limits specified for reverse voltage. See the Reverse Voltage section for allowable limits.

The maximum power dissipation by case size can be determined using the table at right. The maximum power dissipation rating stated in the table must be reduced with increasing environmental operating temperatures. Refer to the table below for temperature compensation requirements.

Temperature Compensation Multipliers for Maximum Ripple Current		
T ≤ 25°C	T ≤ 85°C	T ≤ 125°C
1.00	0.90	0.40

T= Environmental Temperature

The maximum power dissipation rating must be reduced with increasing environmental operating temperatures. Refer to the Temperature Compensation Multiplier table for details.

KEMET Case Code	EIA Case Code	Maximum Power Dissipation (Pmax) mWatts at 25°C with +20°C Rise
A	3216–18	75
B	3528–21	85
C	6032–28	110
D	7343–31	150
X	7343–43	165

Using the Pmax of the device, the maximum allowable rms ripple current or voltage may be determined.

$I(max) = \sqrt{Pmax/R}$
$E(max) = Z\sqrt{Pmax/R}$

I = rms ripple current (amperes)
E = rms ripple voltage (volts)
Pmax = maximum power dissipation (watts)
R = ESR at specified frequency (ohms)
Z = Impedance at specified frequency (ohms)

Downloaded from Arrow.com.

Reverse Voltage

Solid tantalum capacitors are polar devices and may be permanently damaged or destroyed if connected with the wrong polarity. The positive terminal is identified on the capacitor body by a stripe plus in some cases a beveled edge. A small degree of transient reverse voltage is permissible for short periods per the table. The capacitors should not be operated continuously in reverse mode, even within these limits.

Temperature	Permissible Transient Reverse Voltage
25°C	15% of Rated voltage
85°C	5% of Rated voltage
125°C	1% of Rated voltage

Table 2 – Land Dimensions/Courtyard

KEMET	Metric Size Code	Density Level A: Maximum (Most) Land Protrusion (mm)					Density Level B: Median (Nominal) Land Protrusion (mm)					Density Level C: Minimum (Least) Land Protrusion (mm)				
Case	EIA	W	L	S	V1	V2	W	L	S	V1	V2	W	L	S	V1	V2
A	3216–18	1.35	2.20	0.62	6.02	2.80	1.23	1.80	0.82	4.92	2.30	1.13	1.42	0.98	4.06	2.04
B	3528–21	2.35	2.21	0.92	6.32	4.00	2.23	1.80	1.12	5.22	3.50	2.13	1.42	1.28	4.36	3.24
C	6032–28	2.35	2.77	2.37	8.92	4.50	2.23	2.37	2.57	7.82	4.00	2.13	1.99	2.73	6.96	3.74
D	7343–31	2.55	2.77	3.67	10.22	5.60	2.43	2.37	3.87	9.12	5.10	2.33	1.99	4.03	8.26	4.84
X[1]	7343–43	2.55	2.77	3.67	10.22	5.60	2.43	2.37	3.87	9.12	5.10	2.33	1.99	4.03	8.26	4.84

Density Level A: *For low-density product applications. Recommended for wave solder applications and provides a wider process window for reflow solder processes.*
Density Level B: *For products with a moderate level of component density. Provides a robust solder attachment condition for reflow solder processes.*
Density Level C: *For high component density product applications. Before adapting the minimum land pattern variations the user should perform qualification testing based on the conditions outlined in IPC Standard 7351 (IPC–7351).*
[1] Height of these chips may create problems in wave soldering.

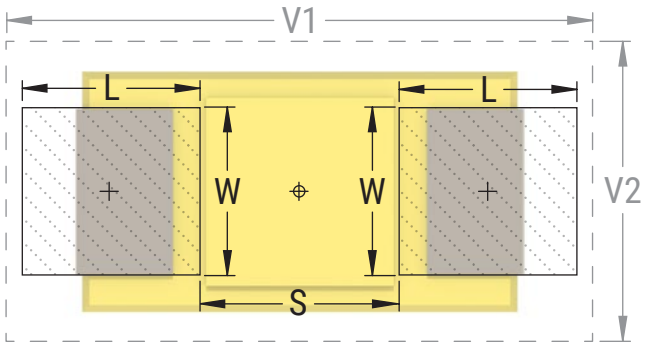

Grid Placement Courtyard

Downloaded from Arrow.com.

Soldering Process

The KEMET families of surface mount capacitors are compatible with wave (single or dual), convection, IR, or vapor phase reflow techniques. Preheating of these components is recommended to avoid extreme thermal stress. KEMET's recommended profile conditions for convection and IR reflow reflect the profile conditions of the IPC/J–STD–020D standard for moisture sensitivity testing. The devices can safely withstand a maximum of three reflow passes at these conditions.

Please note that although the X/7343–43 case size can withstand wave soldering, the tall profile (4.3 mm maximum) dictates care in wave process development.

Hand soldering should be performed with care due to the difficulty in process control. If performed, care should be taken to avoid contact of the soldering iron to the molded case. The iron should be used to heat the solder pad, applying solder between the pad and the termination, until reflow occurs. Once reflow occurs, the iron should be removed immediately. “Wiping” the edges of a chip and heating the top surface is not recommended.

During typical reflow operations, a slight darkening of the gold-colored epoxy may be observed. This slight darkening is normal and not harmful to the product. Marking permanency is not affected by this change.

Profile Feature	SnPb Assembly	Pb-Free Assembly
Preheat/Soak		
Temperature Minimum (T_{Smin})	100°C	150°C
Temperature Maximum (T_{Smax})	150°C	200°C
Time (t_s) from T_{smin} to T_{smax})	60 – 120 seconds	60 – 120 seconds
Ramp-up Rate (T_L to T_P)	3°C/second maximum	3°C/second maximum
Liquidous Temperature (T_L)	183°C	217°C
Time Above Liquidous (t_L)	60 – 150 seconds	60 – 150 seconds
Peak Temperature (T_P)	220°C* 235°C**	250°C* 260°C**
Time within 5°C of Maximum Peak Temperature (t_p)	20 seconds maximum	30 seconds maximum
Ramp-down Rate (T_P to T_L)	6°C/second maximum	6°C/second maximum
Time 25°C to Peak Temperature	6 minutes maximum	8 minutes maximum

Note: All temperatures refer to the center of the package, measured on the package body surface that is facing up during assembly reflow.
** For Case Size height > 2.5 mm*
*** For Case Size height ≤ 2.5 mm*

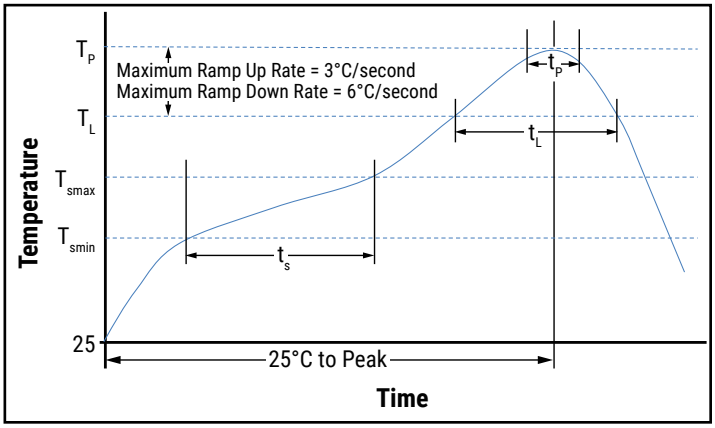

Storage

Tantalum chip capacitors should be stored in normal working environments. While the chips themselves are quite robust in other environments, solderability will be degraded by exposure to high temperatures, high humidity, corrosive atmospheres, and long term storage. In addition, packaging materials will be degraded by high temperature – reels may soften or warp and tape peel force may increase. KEMET recommends that maximum storage temperature not exceed 40°C and maximum storage humidity not exceed 60% relative humidity. Temperature fluctuations should be minimized to avoid condensation on the parts and atmospheres should be free of chlorine and sulphur bearing compounds. For optimized solderability, chip stock should be used promptly, preferably within three years of receipt.

Downloaded from Arrow.com.

Construction

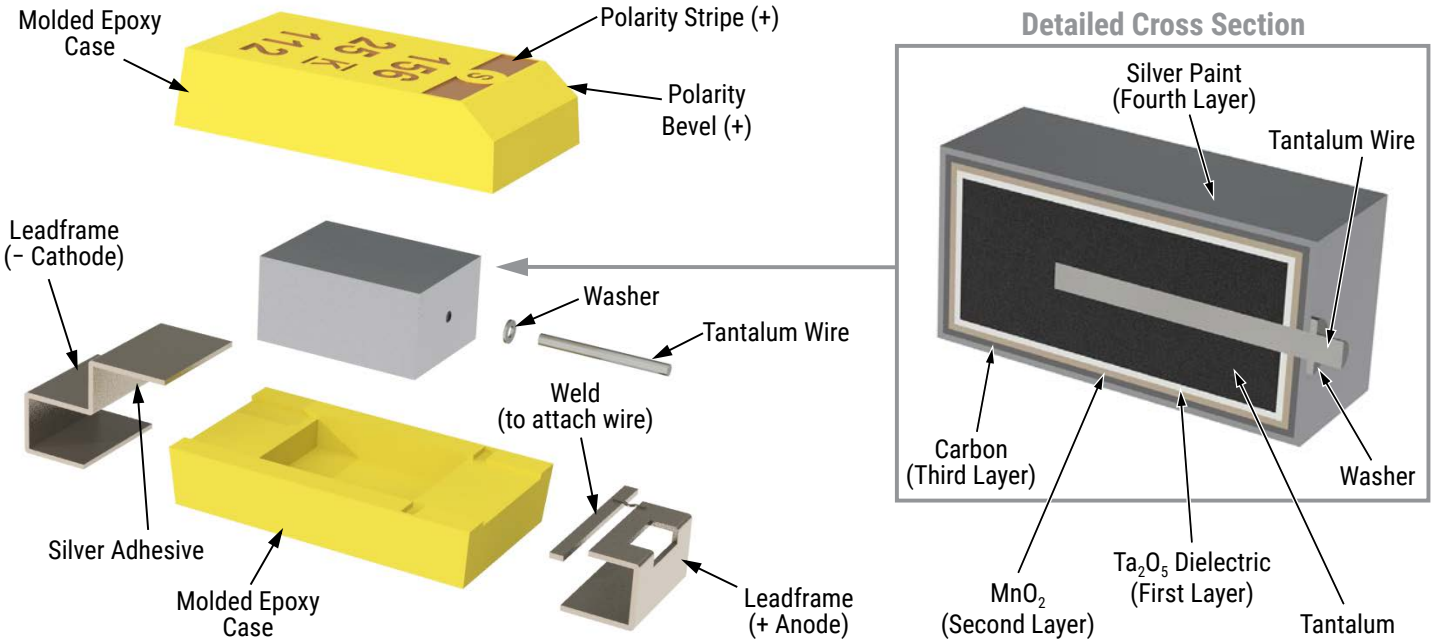

Capacitor Marking

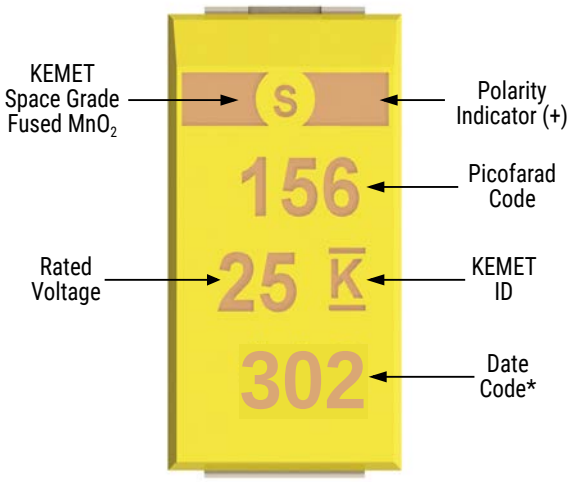

* 302 = 2nd week of 2023

Parts screened with Option C are marked with a serial number below date code characters.

Date Code *	
1st digit = Last number of Year	0 = 2020 1 = 2021 2 = 2022 3 = 2023
2nd and 3rd digit = Week of the Year	01 = 1st week of the Year to 52 = 52nd week of the Year

Downloaded from Arrow.com.

Tape & Reel Packaging Information

KEMET's molded tantalum and aluminum chip capacitor families are packaged in 8 and 12 mm plastic tape on 7" and 13" reels in accordance with *EIA Standard 481*: Embossed Carrier Taping of Surface Mount Components for Automatic Handling. This packaging system is compatible with all tape-fed automatic pick-and-place systems.

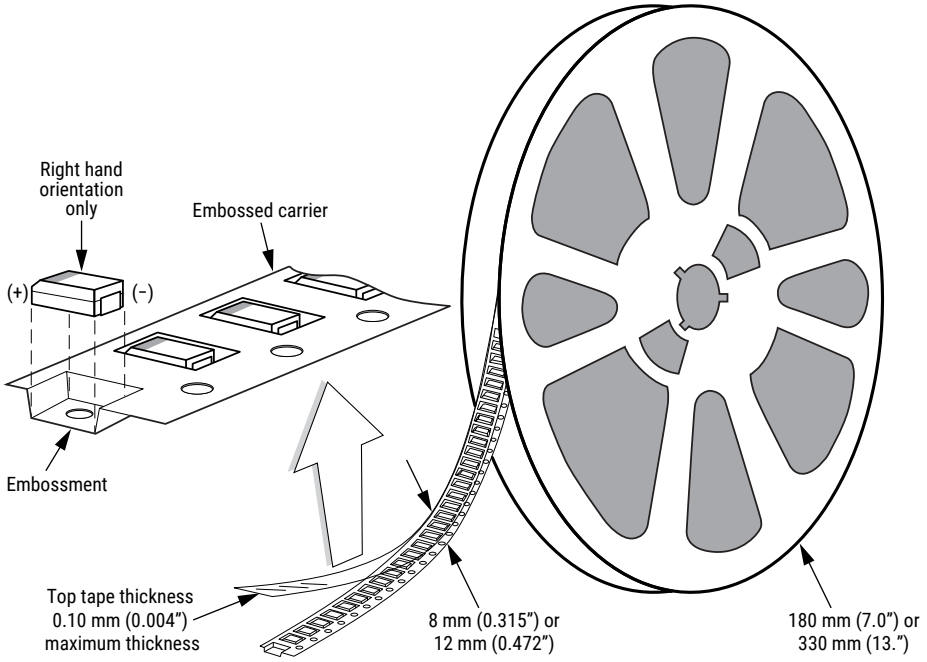

Table 3 – Packaging Quantity

Case Code		Tape Width (mm)	7" Reel*
KEMET	EIA		
A	3216-18	8	2,000
B	3528-21	8	2,000
C	6032-28	12	500
D	7343-31	12	500
X	7343-43	12	500

Downloaded from Arrow.com.

Figure 1 – Embossed (Plastic) Carrier Tape Dimensions

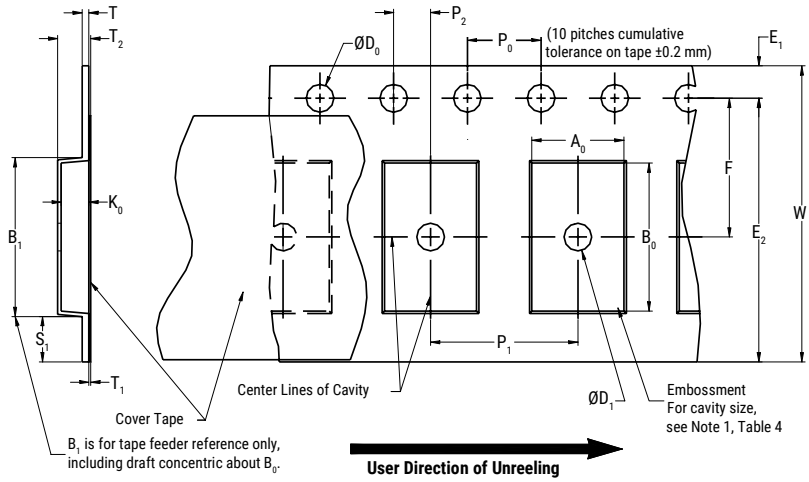

Table 4 – Embossed (Plastic) Carrier Tape Dimensions

Metric will govern

Constant Dimensions — Millimeters (Inches)									
Tape Size	D_0	D_1 Minimum Note 1	E_1	P_0	P_2	R Reference Note 2	S_1 Minimum Note 3	T Maximum	T_1 Maximum
8 mm	1.5 +0.10/−0.0 (0.059 +0.004/−0.0)	1.0 (0.039)	1.75 ±0.10 (0.069 ±0.004)	4.0 ±0.10 (0.157 ±0.004)	2.0 ±0.05 (0.079 ±0.002)	25.0 (0.984)	0.600 (0.024)	0.600 (0.024)	0.100 (0.004)
12 mm		1.5 (0.059)				30 (1.181)			

Variable Dimensions — Millimeters (Inches)								
Tape Size	Pitch	B_1 Maximum Note 4	E_2 Minimum	F	P_1	T_2 Maximum	W Maximum	A_0, B_0 & K_0
8 mm	Single (4 mm)	4.35 (0.171)	6.25 (0.246)	3.5 ±0.05 (0.138 ±0.002)	4.0 ±0.10 (0.157 ±0.004)	2.5 (0.098)	8.3 (0.327)	Note 5
12 mm	Single (4 mm) and Double (8 mm)	8.2 (0.323)	10.25 (0.404)	5.5 ±0.05 (0.217 ±0.002)	8.0 ±0.10 (0.315 ±0.004)	4.6 (0.181)	12.3 (0.484)	

1. *The embossment hole location shall be measured from the sprocket hole controlling the location of the embossment. Dimensions of embossment location and hole location shall be applied independent of each other.*
2. *The tape, with or without components, shall pass around R without damage (see Figure 4).*
3. *If S_1 < 1.0 mm, there may not be enough area for cover tape to be properly applied (see EIA Standard 481–D, paragraph 4.3, section b).*
4. *B_1 dimension is a reference dimension for tape feeder clearance only.*
5. *The cavity defined by A_0, B_0 and K_0 shall surround the component with sufficient clearance that:*
   (a) the component does not protrude above the top surface of the carrier tape.
   (b) the component can be removed from the cavity in a vertical direction without mechanical restriction, after the top cover tape has been removed.
   (c) rotation of the component is limited to 20° maximum for 8 and 12 mm tapes (see Figure 2).
   (d) lateral movement of the component is restricted to 0.5 mm maximum for 8 mm and 12 mm wide tape (see Figure 3).
   (e) see Addendum in EIA Standard 481–D for standards relating to more precise taping requirements.

Downloaded from Arrow.com.

Packaging Information Performance Notes

1. Cover tape break force: 1.0 kg minimum.
2. Cover tape peel strength: The total peel strength of the cover tape from the carrier tape shall be:

Tape Width	Peel Strength
8 mm	0.1 to 1.0 newton (10 to 100 gf)
12 mm	0.1 to 1.3 newton (10 to 130 gf)

The direction of the pull shall be opposite the direction of the carrier tape travel. The pull angle of the carrier tape shall be 165° to 180° from the plane of the carrier tape. During peeling, the carrier and/or cover tape shall be pulled at a velocity of 300 ±10 mm/minute.
3. Labeling: Bar code labeling (standard or custom) shall be on the side of the reel opposite the sprocket holes. *Refer to EIA Standards 556 and 624*.

Figure 2 – Maximum Component Rotation

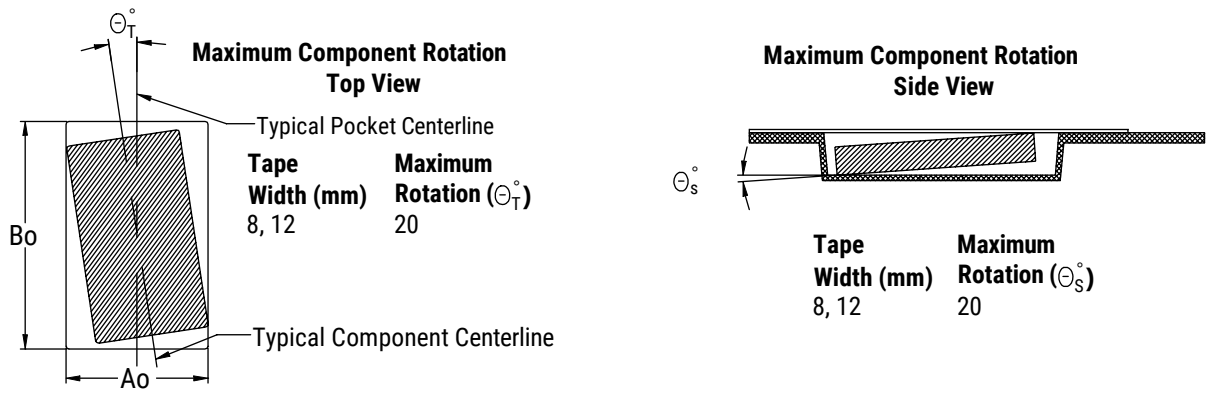

Figure 3 – Maximum Lateral Movement

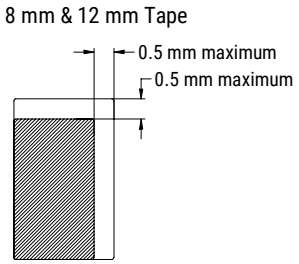

Figure 4 – Bending Radius

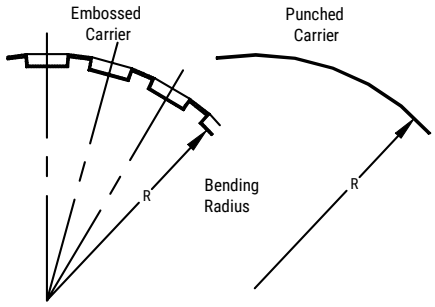

Downloaded from Arrow.com.

Figure 5 – Reel Dimensions

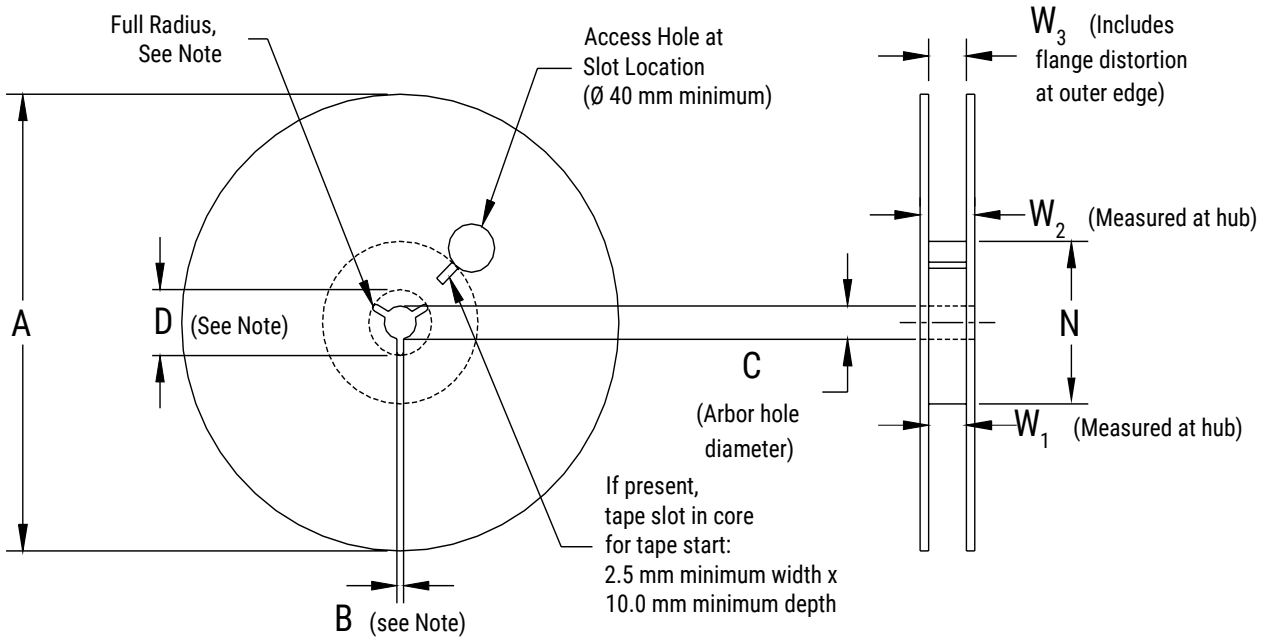

Note: Drive spokes optional; if used, dimensions B and D shall apply.

Table 5 – Reel Dimensions

Metric will govern

Constant Dimensions — Millimeters (Inches)				
Tape Size	A	B Minimum	C	D Minimum
8 mm	178 ±0.20 (7.008 ±0.008) or 330 ±0.20 (13.000 ±0.008)	1.5 (0.059)	13.0 +0.5/−0.2 (0.521 +0.02/−0.008)	20.2 (0.795)
12 mm				

Variable Dimensions — Millimeters (Inches)				
Tape Size	N Minimum	W_1	W_2 Maximum	W_3
8 mm	50 (1.969)	8.4 +1.5/−0.0 (0.331 +0.059/−0.0)	14.4 (0.567)	Shall accommodate tape width without interference
12 mm		12.4 +2.0/−0.0 (0.488 +0.078/−0.0)	18.4 (0.724)	

Downloaded from Arrow.com.

Figure 6 – Tape Leader & Trailer Dimensions

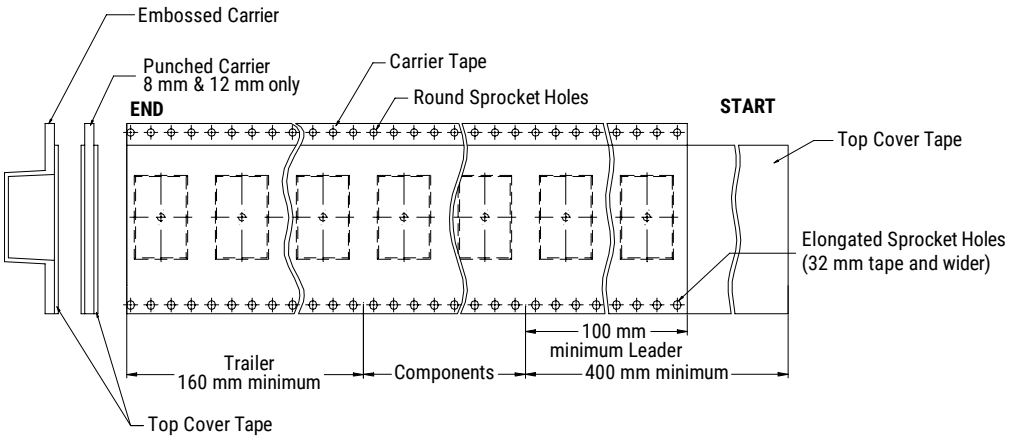

Figure 7 – Maximum Camber

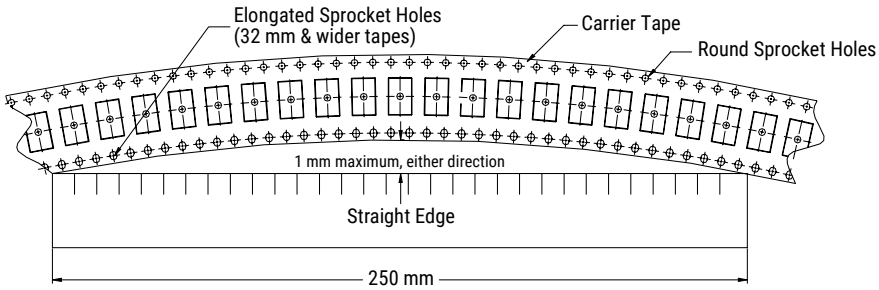

Downloaded from Arrow.com.

KEMET Electronics Corporation Sales Offices

For a complete list of our global sales offices, please visit www.kemet.com/sales.

Disclaimer

All product specifications, statements, information and data (collectively, the "Information") in this datasheet are subject to change. The customer is responsible for checking and verifying the extent to which the Information contained in this publication is applicable to an order at the time the order is placed. All Information given herein is believed to be accurate and reliable, but it is presented without guarantee, warranty, or responsibility of any kind, expressed or implied.

Statements of suitability for certain applications are based on KEMET Electronics Corporation's ("KEMET") knowledge of typical operating conditions for such applications, but are not intended to constitute – and KEMET specifically disclaims – any warranty concerning suitability for a specific customer application or use. The Information is intended for use only by customers who have the requisite experience and capability to determine the correct products for their application. Any technical advice inferred from this Information or otherwise provided by KEMET with reference to the use of KEMET's products is given gratis, and KEMET assumes no obligation or liability for the advice given or results obtained.

Although KEMET designs and manufactures its products to the most stringent quality and safety standards, given the current state of the art, isolated component failures may still occur. Accordingly, customer applications which require a high degree of reliability or safety should employ suitable designs or other safeguards (such as installation of protective circuitry or redundancies) in order to ensure that the failure of an electrical component does not result in a risk of personal injury or property damage.

Although all product–related warnings, cautions and notes must be observed, the customer should not assume that all safety measures are indicated or that other measures may not be required.

KEMET is a registered trademark of KEMET Electronics Corporation.

Downloaded from Arrow.com.