ON Semiconductor

Is Now

To learn more about onsemi™, please visit our website at
www.onsemi.com

onsemi and onsemi and other names, marks, and brands are registered and/or common law trademarks of Semiconductor Components Industries, LLC dba "**onsemi**" or its affiliates and/or subsidiaries in the United States and/or other countries. **onsemi** owns the rights to a number of patents, trademarks, copyrights, trade secrets, and other intellectual property. A listing of **onsemi** product/patent coverage may be accessed at www.onsemi.com/site/pdf/Patent-Marking.pdf. **onsemi** reserves the right to make changes at any time to any products or information herein, without notice. The information herein is provided "as-is" and **onsemi** makes no warranty, representation or guarantee regarding the accuracy of the information, product features, availability, functionality, or suitability of its products for any particular purpose, nor does **onsemi** assume any liability arising out of the application or use of any product or circuit, and specifically disclaims any and all liability, including without limitation special, consequential or incidental damages. Buyer is responsible for its products and applications using **onsemi** products, including compliance with all laws, regulations and safety requirements or standards, regardless of any support or applications information provided by **onsemi**. "Typical" parameters which may be provided in **onsemi** data sheets and/or specifications can and do vary in different applications and actual performance may vary over time. All operating parameters, including "Typicals" must be validated for each customer application by customer's technical experts. **onsemi** does not convey any license under any of its intellectual property rights nor the rights of others. **onsemi** products are not designed, intended, or authorized for use as a critical component in life support systems or any FDA Class 3 medical devices or medical devices with a same or similar classification in a foreign jurisdiction or any devices intended for implantation in the human body. Should Buyer purchase or use **onsemi** products for any such unintended or unauthorized application, Buyer shall indemnify and hold **onsemi** and its officers, employees, subsidiaries, affiliates, and distributors harmless against all claims, costs, damages, and expenses, and reasonable attorney fees arising out of, directly or indirectly, any claim of personal injury or death associated with such unintended or unauthorized use, even if such claim alleges that **onsemi** was negligent regarding the design or manufacture of the part. **onsemi** is an Equal Opportunity/Affirmative Action Employer. This literature is subject to all applicable copyright laws and is not for resale in any manner. Other names and brands may be claimed as the property of others.

Downloaded from Arrow.com.

MOSFET - Power, Single N-Channel

80 V, 3.3 mΩ, 132 A

NVMYS003N08LH

ON Semiconductor®

www.onsemi.com

Features

- Small Footprint (5x6 mm) for Compact Design
- Low $R_{DS(on)}$ to Minimize Conduction Losses
- Low Q_G and Capacitance to Minimize Driver Losses
- LFPAK4 Package, Industry Standard
- AEC−Q101 Qualified and PPAP Capable
- These Devices are Pb−Free and are RoHS Compliant

$V_{(BR)DSS}$	$R_{DS(ON)}$ MAX	I_D MAX
80 V	3.3 mΩ @ 10 V	132 A
	4.3 mΩ @ 4.5 V	

MAXIMUM RATINGS (T_J = 25°C unless otherwise noted)

Parameter			Symbol	Value	Unit
Drain−to−Source Voltage			V_{DSS}	80	V
Gate−to−Source Voltage			V_{GS}	±20	V
Continuous Drain Current $R_{\theta JC}$ (Notes 1, 3)	Steady State	T_C = 25°C	I_D	132	A
		T_C = 100°C		93	
Power Dissipation $R_{\theta JC}$ (Note 1)		T_C = 25°C	P_D	137	W
		T_C = 100°C		68	
Continuous Drain Current $R_{\theta JA}$ (Notes 1, 2, 3)	Steady State	T_A = 25°C	I_D	22	A
		T_A = 100°C		16	
Power Dissipation $R_{\theta JA}$ (Notes 1, 2)		T_A = 25°C	P_D	3.8	W
		T_A = 100°C		1.9	
Pulsed Drain Current	T_A = 25°C, t_p = 10 μs		I_{DM}	900	A
Operating Junction and Storage Temperature Range			T_J, T_{stg}	−55 to +175	°C
Source Current (Body Diode)			I_S	114	A
Single Pulse Drain−to−Source Avalanche Energy ($I_{L(pk)}$ = 9 A)			E_{AS}	1211	mJ
Lead Temperature for Soldering Purposes (1/8″ from case for 10 s)			T_L	260	°C

Stresses exceeding those listed in the Maximum Ratings table may damage the device. If any of these limits are exceeded, device functionality should not be assumed, damage may occur and reliability may be affected.

THERMAL RESISTANCE MAXIMUM RATINGS

Parameter	Symbol	Value	Unit
Junction−to−Case − Steady State	$R_{\theta JC}$	1.1	°C/W
Junction−to−Ambient − Steady State (Note 2)	$R_{\theta JA}$	39.6	

1. The entire application environment impacts the thermal resistance values shown, they are not constants and are only valid for the particular conditions noted.
2. Surface−mounted on FR4 board using a 650 mm^2, 2 oz. Cu pad.
3. Maximum current for pulses as long as 1 second is higher but is dependent on pulse duration and duty cycle.

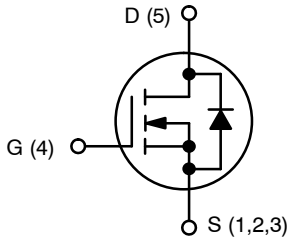

N−CHANNEL MOSFET

LFPAK4
CASE 760AB

MARKING DIAGRAM

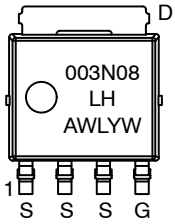

003N08LH	= Specific Device Code
A	= Assembly Location
WL	= Wafer Lot
Y	= Year
W	= Work Week

ORDERING INFORMATION

See detailed ordering, marking and shipping information in the package dimensions section on page 5 of this data sheet.

© Semiconductor Components Industries, LLC, 2019

Downloaded from Arrow.com.

ELECTRICAL CHARACTERISTICS (T_J = 25°C unless otherwise specified)

Parameter	Symbol	Test Condition		Min	Typ	Max	Unit
OFF CHARACTERISTICS							
Drain−to−Source Breakdown Voltage	$V_{(BR)DSS}$	V_{GS} = 0 V, I_D = 250 μA		80			V
Drain−to−Source Breakdown Voltage Temperature Coefficient	$V_{(BR)DSS}/T_J$				40.7		mV/°C
Zero Gate Voltage Drain Current	I_{DSS}	V_{GS} = 0 V, V_{DS} = 80 V	T_J = 25°C			10	μA
			T_J = 125°C			100	
Gate−to−Source Leakage Current	I_{GSS}	V_{DS} = 0 V, V_{GS} = 20 V				100	nA
ON CHARACTERISTICS (Note 4)							
Gate Threshold Voltage	$V_{GS(TH)}$	V_{GS} = V_{DS}, I_D = 183 μA		1.2		2.0	V
Threshold Temperature Coefficient	$V_{GS(TH)}/T_J$				−4.4		mV/°C
Drain−to−Source On Resistance	$R_{DS(on)}$	V_{GS} = 10 V	I_D = 50 A		2.7	3.3	mΩ
		V_{GS} = 4.5 V	I_D = 50 A		3.4	4.3	
Forward Transconductance	g_{FS}	V_{DS} = 8 V, I_D = 50 A			240		S
CHARGES, CAPACITANCES & GATE RESISTANCE							
Input Capacitance	C_{ISS}	V_{GS} = 0 V, f = 1 MHz, V_{DS} = 40 V			3735		pF
Output Capacitance	C_{OSS}				458		
Reverse Transfer Capacitance	C_{RSS}				19		
Total Gate Charge	$Q_{G(TOT)}$	V_{GS} = 10 V, V_{DS} = 40 V; I_D = 50 A			64		nC
Total Gate Charge	$Q_{G(TOT)}$	V_{GS} = 4.5 V, V_{DS} = 40 V; I_D = 50 A			31		nC
Threshold Gate Charge	$Q_{G(TH)}$				6.3		
Gate−to−Source Charge	Q_{GS}				11.1		
Gate−to−Drain Charge	Q_{GD}				10.5		
Plateau Voltage	V_{GP}				3.0		V
SWITCHING CHARACTERISTICS (Note 5)							
Turn−On Delay Time	$t_{d(ON)}$	V_{GS} = 4.5 V, V_{DS} = 64 V, I_D = 50 A, R_G = 2.5 Ω			20		ns
Rise Time	t_r				122		
Turn−Off Delay Time	$t_{d(OFF)}$				42		
Fall Time	t_f				21		
DRAIN−SOURCE DIODE CHARACTERISTICS							
Forward Diode Voltage	V_{SD}	V_{GS} = 0 V, I_S = 50 A	T_J = 25°C		0.79	1.2	V
			T_J = 125°C		0.71		
Reverse Recovery Time	t_{RR}	V_{GS} = 0 V, dIs/dt = 100 A/μs, I_S = 50 A			57		ns
Charge Time	t_a				31		
Discharge Time	t_b				27		
Reverse Recovery Charge	Q_{RR}				66		nC

Product parametric performance is indicated in the Electrical Characteristics for the listed test conditions, unless otherwise noted. Product performance may not be indicated by the Electrical Characteristics if operated under different conditions.

4. Pulse Test: pulse width ≤ 300 μs, duty cycle ≤ 2%.
5. Switching characteristics are independent of operating junction temperatures.

Downloaded from Arrow.com.

TYPICAL CHARACTERISTICS

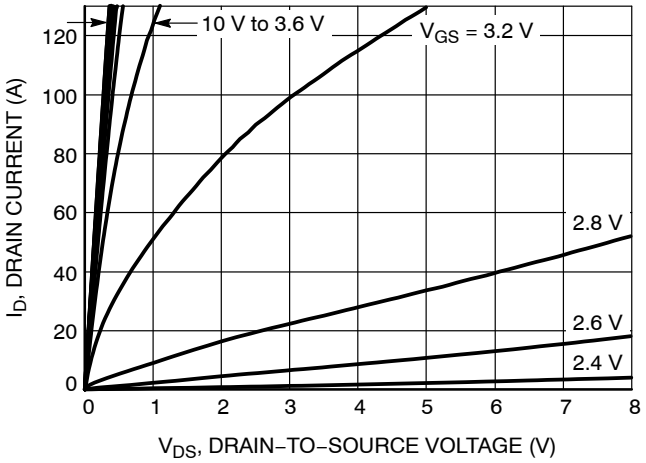

Figure 1. On−Region Characteristics

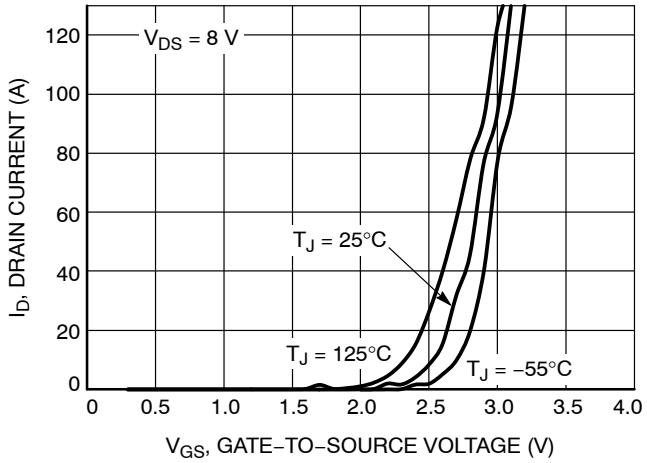

Figure 2. Transfer Characteristics

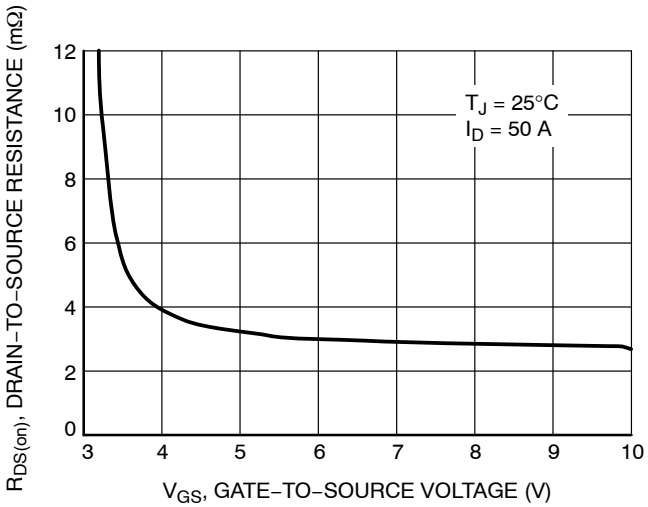

Figure 3. On−Resistance vs. Gate−to−Source Voltage

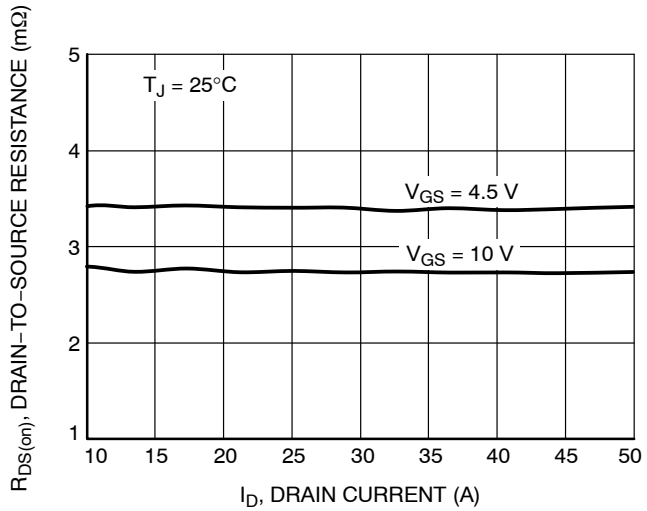

Figure 4. On−Resistance vs. Drain Current and Gate Voltage

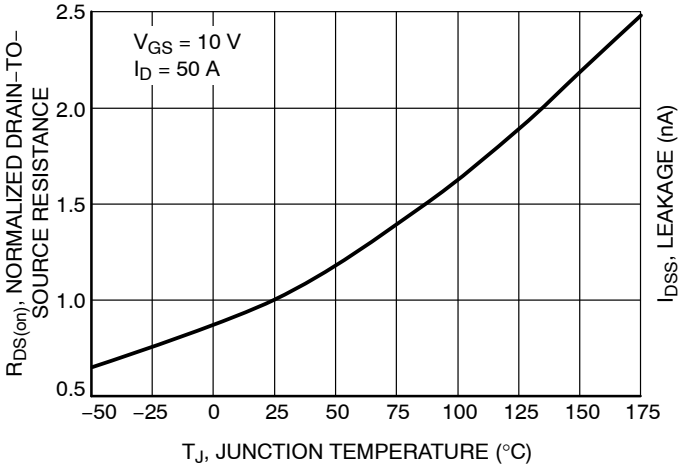

Figure 5. On−Resistance Variation with Temperature

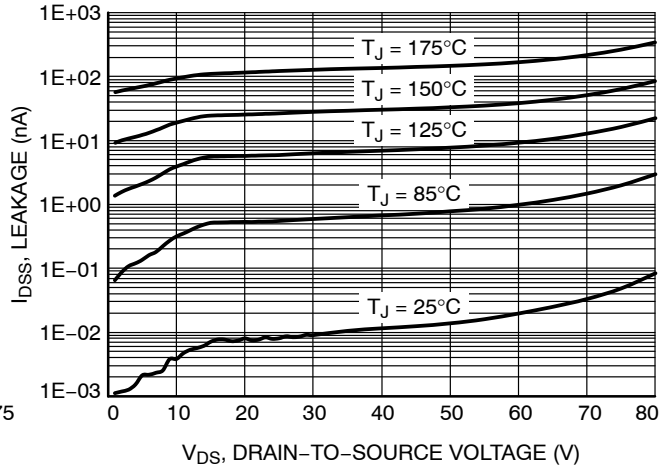

Figure 6. Drain−to−Source Leakage Current vs. Voltage

Downloaded from Arrow.com.

TYPICAL CHARACTERISTICS

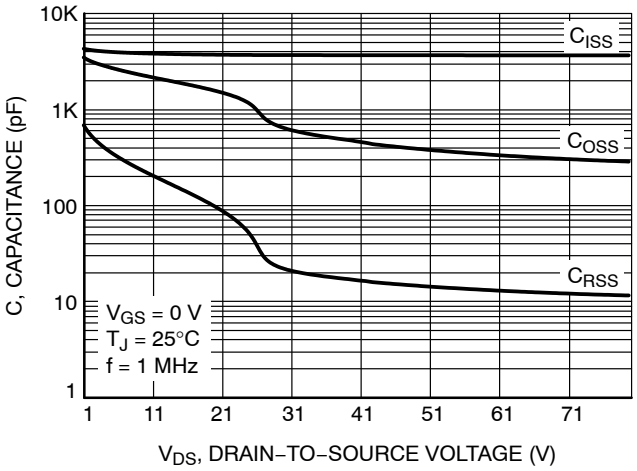

Figure 7. Capacitance Variation

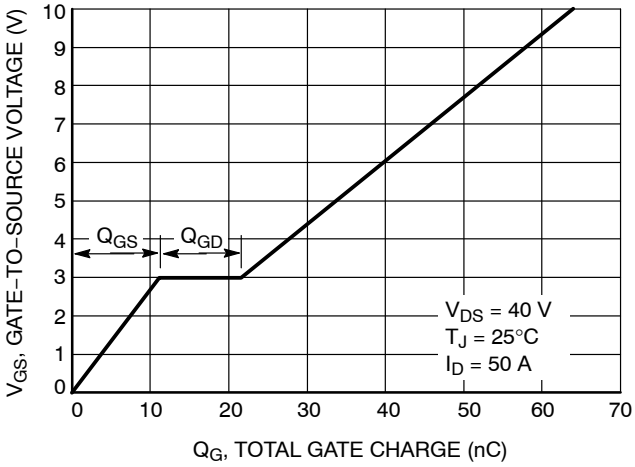

Figure 8. Gate−to−Source vs. Total Charge

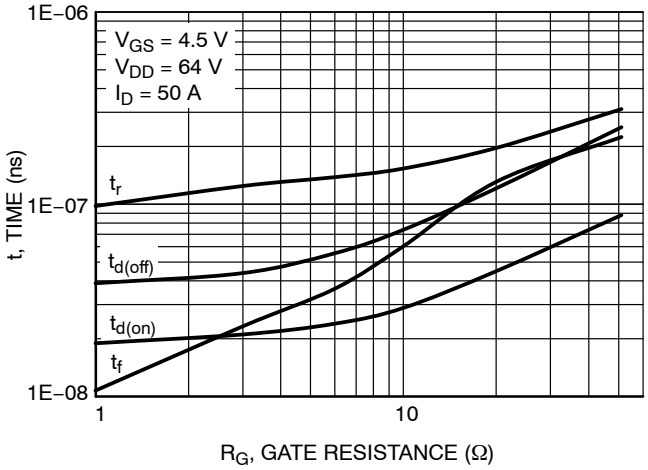

Figure 9. Resistive Switching Time Variation vs. Gate Resistance

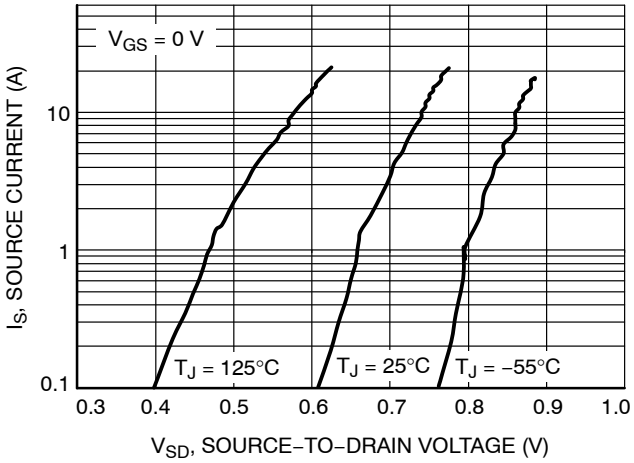

Figure 10. Diode Forward Voltage vs. Current

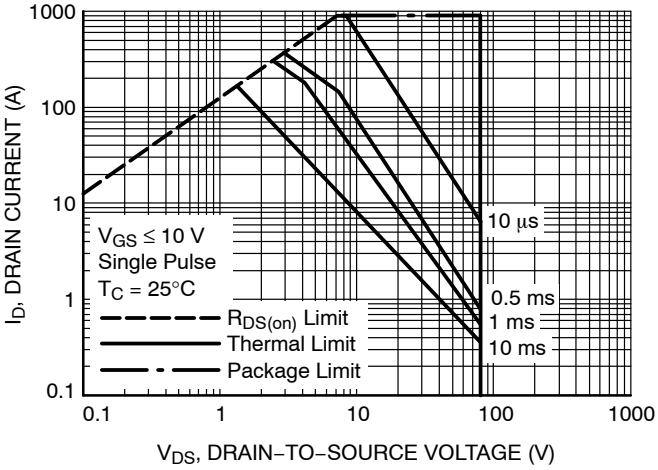

Figure 11. Maximum Rated Forward Biased Safe Operating Area

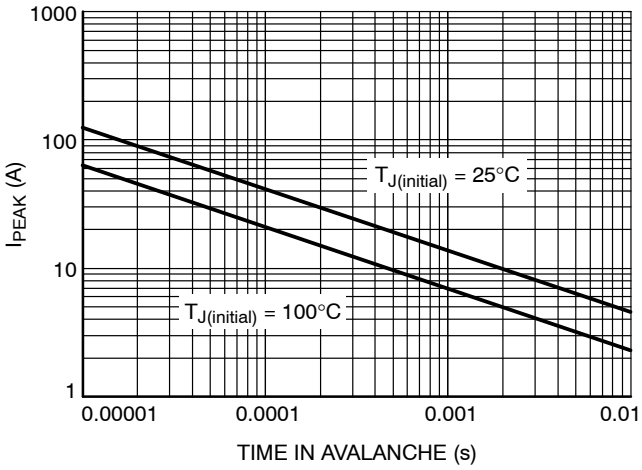

Figure 12. I_{PEAK} vs. Time in Avalanche

Downloaded from Arrow.com.

TYPICAL CHARACTERISTICS

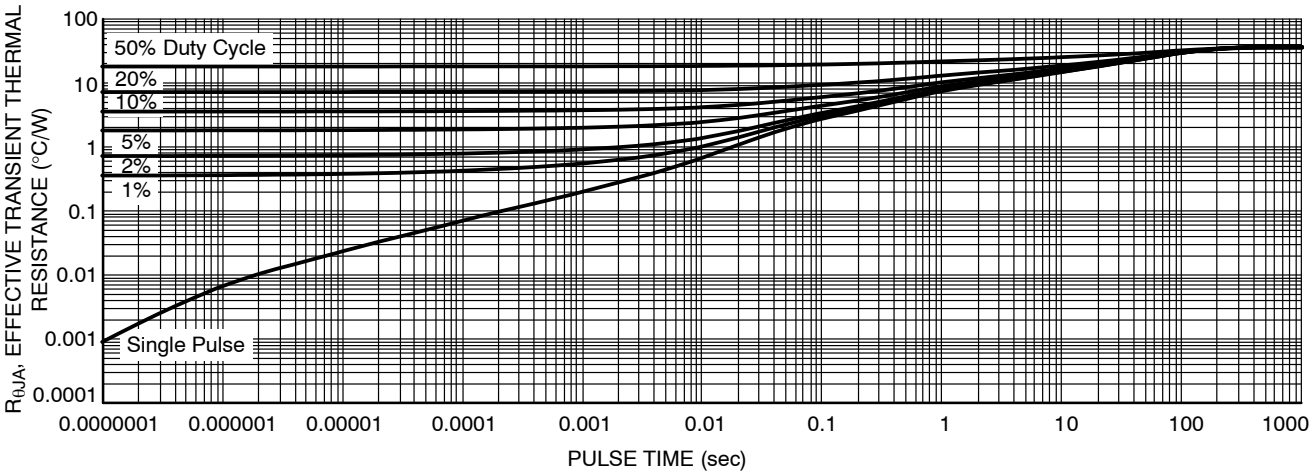

Figure 13. Thermal Response

DEVICE ORDERING INFORMATION

Device	Marking	Package	Shipping†
NVMYS003N08LHTWG	003N08LH	LFPAK4 (Pb−Free)	3000 / Tape & Reel

†For information on tape and reel specifications, including part orientation and tape sizes, please refer to our Tape and Reel Packaging Specifications Brochure, BRD8011/D.

Downloaded from Arrow.com.

NVMYS003N08LH

PACKAGE DIMENSIONS

LFPAK4 5x6
CASE 760AB
ISSUE A

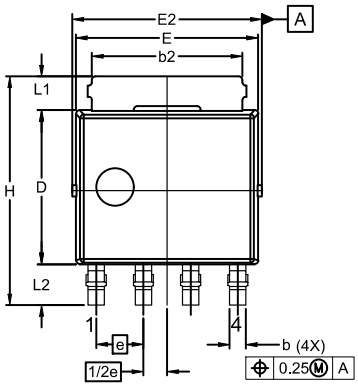

TOP VIEW

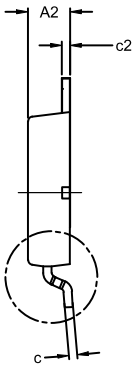

SIDE VIEW

NOTES:
1. DIMENSIONING AND TOLERANCING PER ASME Y14.5M, 1994.
2. CONTROLLING DIMENSION: MILLIMETERS.
3. DIMENSIONS D AND E DO NOT INCLUDE MOLD FLASH, PROTRUSIONS, OR BURRS. MOLD FLASH PROTRUSIONS OR GATE BURRS SHALL NOT EXCEED 0.150mm PER SIDE.
4. DIMENSIONS D AND E ARE DETERMINED AT THE OUTERMOST EXTREMES OF THE PLASTIC BODY.
5. DATUMS A AND B ARE DETERMINED AT DATUM PLANE H.

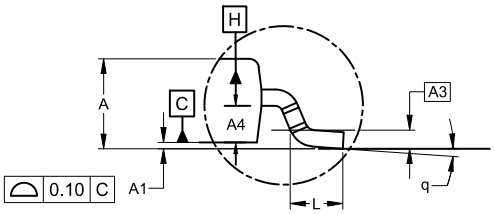

DETAIL 'A'
SCALE: 2:1

UNIT IN MILLIMETER			
DIM	MIN	NOM	MAX
A	1.10	1.20	1.30
A1	0.00	0.08	0.15
A2	1.10	1.15	1.20
A3		0.25	
A4	0.45	0.50	0.55
b	0.40	0.45	0.50
b2	3.80	4.10	4.40
b3	2.00	2.10	2.20
b4	0.70	0.80	0.90
c	0.19	0.22	0.25
c2	0.19	0.22	0.25
D	4.05	4.15	4.25
D1	-	-	4.20
D2	3.0	3.10	3.20
D3	0.30	0.40	0.50
E	4.80	4.90	5.00
E1	3.10	3.20	3.30
E2	5.00	5.15	5.30
e		1.27 BSC	
H	6.00	6.15	6.30
L	0.40	0.65	0.85
L1	0.80	0.90	1.00
L2	0.80	1.05	1.30
q	0°	4°	8°

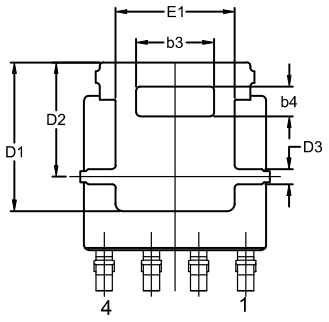

BOTTOM VIEW

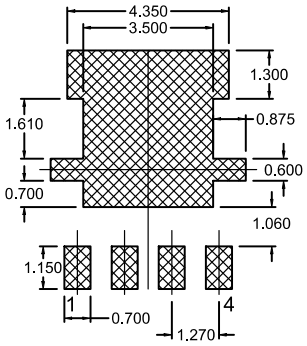

RECOMMENDED MOUNTING FOOTPRINT

ON Semiconductor and ON are trademarks of Semiconductor Components Industries, LLC dba ON Semiconductor or its subsidiaries in the United States and/or other countries. ON Semiconductor owns the rights to a number of patents, trademarks, copyrights, trade secrets, and other intellectual property. A listing of ON Semiconductor's product/patent coverage may be accessed at www.onsemi.com/site/pdf/Patent−Marking.pdf. ON Semiconductor reserves the right to make changes without further notice to any products herein. ON Semiconductor makes no warranty, representation or guarantee regarding the suitability of its products for any particular purpose, nor does ON Semiconductor assume any liability arising out of the application or use of any product or circuit, and specifically disclaims any and all liability, including without limitation special, consequential or incidental damages. Buyer is responsible for its products and applications using ON Semiconductor products, including compliance with all laws, regulations and safety requirements or standards, regardless of any support or applications information provided by ON Semiconductor. "Typical" parameters which may be provided in ON Semiconductor data sheets and/or specifications can and do vary in different applications and actual performance may vary over time. All operating parameters, including "Typicals" must be validated for each customer application by customer's technical experts. ON Semiconductor does not convey any license under its patent rights nor the rights of others. ON Semiconductor products are not designed, intended, or authorized for use as a critical component in life support systems or any FDA Class 3 medical devices or medical devices with a same or similar classification in a foreign jurisdiction or any devices intended for implantation in the human body. Should Buyer purchase or use ON Semiconductor products for any such unintended or unauthorized application, Buyer shall indemnify and hold ON Semiconductor and its officers, employees, subsidiaries, affiliates, and distributors harmless against all claims, costs, damages, and expenses, and reasonable attorney fees arising out of, directly or indirectly, any claim of personal injury or death associated with such unintended or unauthorized use, even if such claim alleges that ON Semiconductor was negligent regarding the design or manufacture of the part. ON Semiconductor is an Equal Opportunity/Affirmative Action Employer. This literature is subject to all applicable copyright laws and is not for resale in any manner.

PUBLICATION ORDERING INFORMATION

LITERATURE FULFILLMENT:
Email Requests to: orderlit@onsemi.com

ON Semiconductor Website: www.onsemi.com

TECHNICAL SUPPORT
North American Technical Support:
Voice Mail: 1 800−282−9855 Toll Free USA/Canada
Phone: 011 421 33 790 2910

Europe, Middle East and Africa Technical Support:
Phone: 00421 33 790 2910
For additional information, please contact your local Sales Representative

◊

Downloaded from Arrow.com.