# XCL232 Series

ETR05086-001b

Ultra-Low Quiescent Current, Inductor Built-in Step-Down DC/DC Converter

☆Green Operation compatible

## ■GENERAL DESCRIPTION

The XCL232 series is a synchronous step-down micro DC/DC converter which integrates an inductor and a control IC in one tiny package. It uses an ultra-low current consumption circuit and PFM control. The control IC and coil are integrated to achieve miniaturization, and a space-saving power supply can be configured simply by adding two external capacitors. In addition, the ultra-low current consumption circuit and PFM control method realize high efficiency with a light load.

A operating voltage range of 1.8V to 6.0V enables support for applications that require an internally fixed output voltage from 0.5V to 3.6V.

It has a built-in UVLO function, the internal P-channel driver FET and N-channel driver FET are turned OFF when input voltage is below to the UVLO detection voltage. The D type integrate $C_L$ discharge function which enables the electric charge at the output capacitor $C_L$ to be discharged via the internal discharge switch located between the $V_{OUT}$ and GND. When the devices enter stand-by mode, output voltage quickly returns to the GND level as a result of this function.

## ■APPLICATIONS

- Smart meter
- Low Power RF
- Sensor Module
- Wearable Devices
- Energy Harvest devices
- Back-up power supply circuit
- Smart card
- Devices with 1 Lithium cell

## ■FEATURES

| | | |
|---|---|---|
| Input Voltage Range | : | 1.8V ~ 6.0V |
| Output Voltage Setting | : | 0.5V ~ 1.9V (0.05V increments) |
| | | 2.0V ~ 3.6V (0.1V increments) |
| Output Voltage Accuracy | | ±20mV ($V_{OUT1-2}$≦1.0V) |
| | | ±2.0% ($V_{OUT1-2}$＞1.0V) |
| Output Current | : | 150mA |
| Supply Current | : | 200nA @ $V_{OUT}$=1.8V |
| Control Method | : | PFM control |
| Efficiency | : | 86% ($V_{IN}$=3.6V, $V_{OUT}$=1.8V, Iout=10mA) |
| Function | : | $C_L$ Discharge (D Type) |
| | | UVLO function |
| Protection Functions | : | Short Protection |
| Input / Output Capacitor | : | Ceramic Capacitor Compatible |
| Operation Ambient Temperature | : | -40 ~ 85℃ |
| Package | : | CL-2025-03 (2.5 x 2.0 x 1.04mm) |
| Environmentally Friendly | | EU RoHS compliant, Pb Free |

## ■TYPICAL APPLICATION CIRCUIT

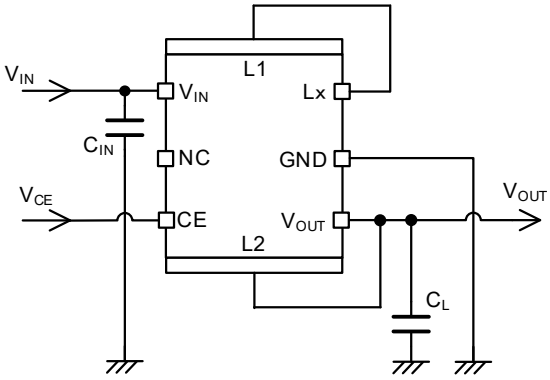


## ■TYPICAL PERFORMANCE CHARACTERISTICS

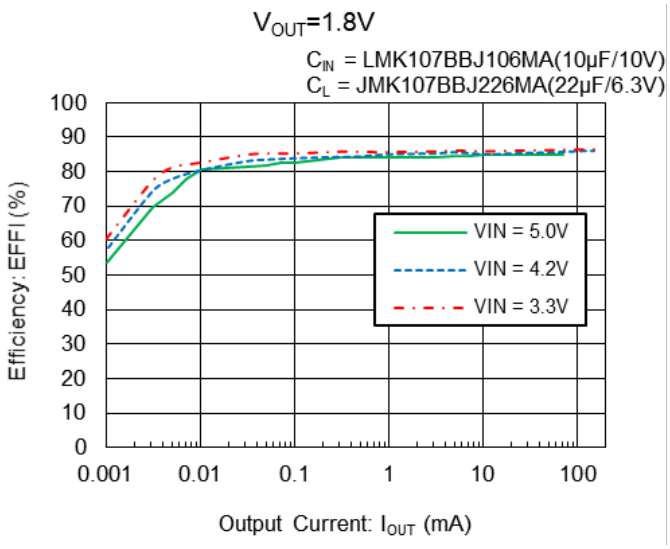




Downloaded from Arrow.com.

## ■ BLOCK DIAGRAM

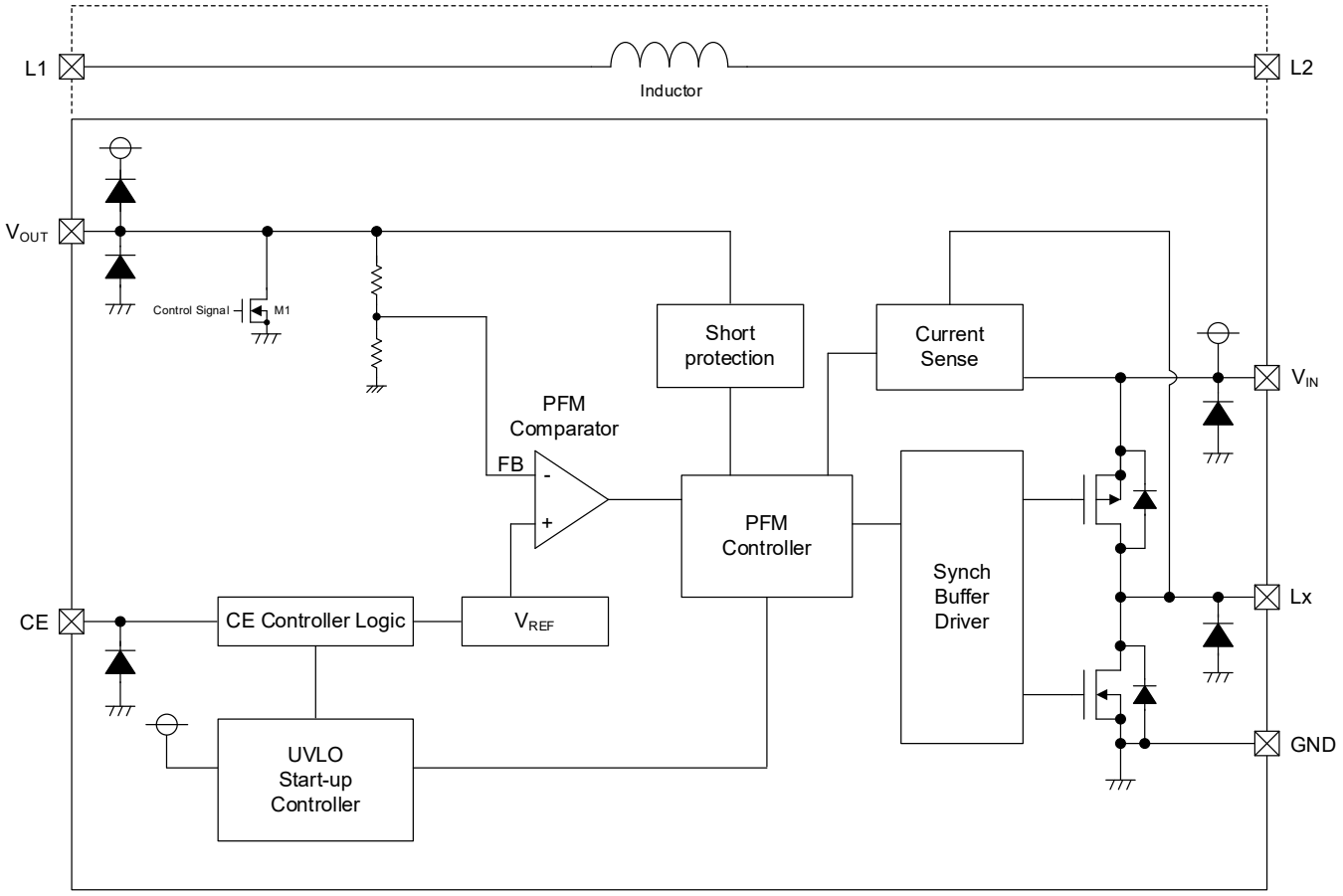


* Diodes inside the circuits are ESD protection diodes and parasitic diodes.
XCL232B type does not have $C_L$ Discharge function.



Downloaded from Arrow.com.

# ■PRODUCT CLASSIFICATION

1) Ordering information

XCL232①②③④⑤⑥-⑦

| DESIGNATOR | ITEM | SYMBOL | DESCRIPTION |
|---|---|---|---|
| ① | Product Type | B | Without $C_L$ Discharge |
| | | D | With $C_L$ Discharge |
| ②③ | Output Voltage | 05 ~ 36 | Output Voltage options<br>e.g.) 1.2V → ② = 1 ③ = 2<br>1.25V → ② = 1 ③ = C<br>0.05V increments :<br>0.05=A, 0.15=B, 0.25=C, 0.35=D, 0.45=E,<br>0.55=F, 0.65=H, 0.75=K, 0.85=L, 0.95=M<br>($V_{OUT}$≦1.9V : 0.05V increments,<br>$V_{OUT}$＞1.9V : 0.1V increments) |
| ④ | Fixed number | 1 | Fixed number |
| ⑤⑥-⑦ (*1) | Packages<br>(Order Unit) | KR-G | CL-2025-03 (*2) (3,000pcs/Reel) |

(*1) The "-G" suffix denotes Halogen and Antimony free as well as being fully EU RoHS compliant.
(*2) CL-2025-03 Reels are shipped in moisture-proof packaging.

2) Selection Guide

| FUNCTION | B TYPE | | D TYPE | |
|---|---|---|---|---|
| | $V_{OUT(T)}$＜1.2V | $V_{OUT(T)}$≧1.2V | $V_{OUT(T)}$＜1.2V | $V_{OUT(T)}$≧1.2V |
| Short Protection | - | Yes | - | Yes |
| $C_L$ Discharge | - | | Yes | |
| Chip Enable | Yes | | | |
| UVLO | Yes | | | |



Downloaded from Arrow.com.

## ■PIN CONFIGURATION

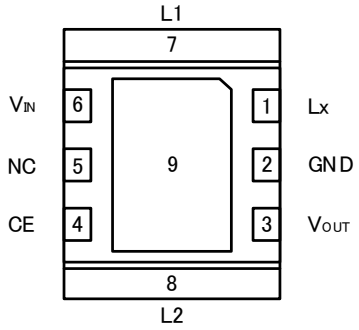


< BOTTOM VIEW >

## ■PIN ASSIGNMENT

| PIN NUMBER | PIN NAME | FUNCTION |
|---|---|---|
| 1 | Lx | Switching |
| 2 | GND | Ground |
| 3 | $V_{OUT}$ | Output Voltage |
| 4 | CE | Chip Enable |
| 5 | NC | No Connection |
| 6 | $V_{IN}$ | Input Voltage |
| 7 | L1 | Inductor Electrodes |
| 8 | L2 | Inductor Electrodes |
| 9 | EP | Exposed thermal pad.<br>The Exposed pad must be connected to GND(Pin2). |

## ■ FUNCTION

| PIN NAME | SIGNAL | STATUS |
|---|---|---|
| CE | H | Active |
| | L | Stand-by |
| | OPEN | Undefined State (*1) |

(*1) Please do not leave the CE pin open.



Downloaded from Arrow.com.

## ■ABSOLUTE MAXIMUM RATINGS

Ta=25℃

| PARAMETER | SYMBOL | RATINGS | UNITS |
|---|---|---|---|
| $V_{IN}$ Pin Voltage | $V_{IN}$ | -0.3 ~ 7.0 | V |
| Lx Pin Voltage | $V_{LX}$ | -0.3 ~ $V_{IN}$ + 0.3 or 7.0 (*1) | V |
| $V_{OUT}$ Pin Voltage | $V_{OUT}$ | -0.3 ~ $V_{IN}$ + 0.3 or 7.0 (*1) | V |
| CE Pin Voltage | $V_{CE}$ | -0.3 ~ 7.0 | V |
| Power Dissipation | Pd | 800 (40 x 40mm Standard board) (*2) | mW |
| Junction Temperature | Tj | -40 ~ 125 | ℃ |
| Storage Temperature | Tstg | -55 ~ 125 | ℃ |

* All voltages are described based on the GND pin.
(*1) The maximum value should be either $V_{IN}$+0.3V or 7.0V in the lowest.
(*2) The power dissipation figure shown is PCB mounted and is for reference only.
Please refer to PACKAGING INFORMATION for the mounting condition.

## ■RECOMMENDED OPERATING CONDITIONS

| PARAMETER | SYMBOL | MIN. | TYP. | MAX. | UNITS |
|---|---|---|---|---|---|
| $V_{IN}$ Pin Voltage | $V_{IN}$ | 1.8 | ~ | 6.0 | V |
| $I_{OUT}$ Current | $I_{OUT}$ | 0 | ~ | 150 | mA |
| CE Pin Voltage | $V_{CE}$ | 0.0 | ~ | 6.0 | V |
| Operating Ambient Temperature | Topr | -40 | ~ | 85 | ℃ |
| Junction Temperature | Tj | -40 | ~ | 105 | ℃ |

* All voltage operating condition is based on the GND pin.



Downloaded from Arrow.com.

## ■ELECTRICAL CHARACTERISTICS

Ta=25℃

| PARAMETER | SYMBOL | CONDITIONS | | MIN. | TYP. | MAX. | UNITS | CIRCUIT |
|---|---|---|---|---|---|---|---|---|
| Output Voltage(*1) | $V_{OUT1}$ | When connected to external components, $I_{OUT}$ = 30mA | | - | <T-1> | - | V | ① |
| Output Voltage1-2 | $V_{OUT1-2}$ | Voltage which $L_X$ pin changes "H" to "L" level while $V_{OUT}$ is increase. (*5) | | <E-1> | <E-2> | <E-3> | V | ② |
| Operating Voltage Range | $V_{IN}$ | - | | 1.8 | - | 6.0 | V | ① |
| Maximum Output Current | $I_{OUTMAX}$ | When connected to external components (*2) | | 150 | - | - | mA | ① |
| UVLO Release Voltage | $V_{UVLOR}$ | $V_{OUT}$ = 0.0V, $V_{CE}$ = 1.8V<br>Voltage which Lx pin holding "H" level(*5) | Ta=25℃<br>Ta=-40~85℃(*3) | - | 1.50 | 1.78 | V | ② |
| UVLO Detect Voltage | $V_{UVLOD}$ | $V_{OUT}$ = 0.0V, $V_{CE}$ = 1.8V<br>Voltage which Lx pin holding "L" level(*5) | Ta=25℃<br>Ta=-40~85℃(*3) | 1.00 | 1.40 | - | V | ② |
| Quiescent Current | Iq | $V_{IN}$ = $V_{CE}$ =<C-1>, $V_{OUT}$ = $V_{OUT1}$×1.05 | | - | <E-4> | <E-5> | nA | ③ |
| Stand-by Current | $I_{STB}$ | $V_{IN}$ = 6.0V, $V_{CE}$ = $V_{OUT}$ =0.0V | | - | 0.0 | 0.1 | μA | ③ |
| PFM Switching Current | $I_{PFM}$ | When connected to external components, $V_{IN}$ = $V_{OUT(T)}$ + 2.0V, $I_{OUT}$ = 10mA | | - | 400 | 600 | mA | ① |
| Lx SW "H" ON Resistance | $R_{LXH}$ | $V_{OUT}$ = 0.0V, $V_{IN}$ = $V_{CE}$ = 5.0V, ILx = 50mA | | - | 0.40 | 0.50 | Ω | ④ |
| Lx SW "L" ON Resistance(*3) | $R_{LXL}$ | $V_{IN}$ = 5.0V | | - | 0.35 | 0.45 | Ω | - |
| Lx SW "H" Leakage Current | $I_{LeakH}$ | $V_{IN}$ = 6.0V, $V_{OUT}$ = $V_{CE}$ = 0.0V , VLx = 6.0V | | - | 0.0 | 0.1 | μA | ④ |
| Lx SW "L" Leakage Current | $I_{LeakL}$ | $V_{IN}$ = 6.0V, $V_{OUT}$ = $V_{CE}$ = 0.0V , VLx = 0.0V | | - | 0.0 | 0.1 | μA | ④ |
| Output Voltage Temperature Characteristics | $\Delta V_{OUT}/(V_{OUT} \cdot \Delta T_{opr})$ | $I_{OUT}$ = 30mA<br>-40℃ ≦ Topr ≦ 85℃ | | - | ±100 | - | ppm/℃ | ① |
| CE "H" Voltage | $V_{CEH}$ | $V_{OUT}$ = 0.0V,<br>Voltage which Lx pin holding "H" level(*5) | Ta=25℃<br>Ta=-40~85℃(*3) | 1.2 | - | 6.0 | V | ② |
| CE "L" Voltage | $V_{CEL}$ | $V_{OUT}$ = 0.0V,<br>Voltage which Lx pin holding "L" level(*5) | Ta=25℃<br>Ta=-40~85℃(*3) | GND | - | 0.3 | V | ② |
| CE "H" Current | $I_{CEH}$ | $V_{IN}$ = 6.0V, $V_{OUT}$ = 0.0V, $V_{CE}$ = 6.0V | | -0.1 | 0.0 | 0.1 | μA | ④ |
| CE "L" Current | $I_{CEL}$ | $V_{IN}$ = 6.0V, $V_{OUT}$ = 0.0V, $V_{CE}$ = 0.0V | | -0.1 | 0.0 | 0.1 | μA | ④ |
| Short Protection Threshold Voltage (*4) | $V_{SHORT}$ | Voltage which Lx pin holding "L" level(*5) | Ta=25℃<br>Ta=-40~85℃(*3) | 0.10 | 0.54 | 0.80 | V | ② |
| $C_L$ Discharge (Type D) | $R_{DCHG}$ | $V_{IN}$ = 5.0V, $V_{CE}$ = 0.0V, $V_{OUT}$ =0.1V | | 29 | 45 | 60 | Ω | ② |
| Inductance Value | L | Test Frequency=1MHz | | - | 2.2 | - | μH | |
| Inductor Rated Current | $I_{DC_L}$ | ΔT=+40℃<br>Current value that raises the temperature by 40℃ with DC current | | - | 850 | - | mA | |

Unless otherwise stated, $V_{IN}$=5V, $V_{CE}$=5V, $V_{OUT(T)}$=Nominal Value

(*1) $V_{OUT1}$ are the average values of the output voltage considering the ripple voltage and they are set so that they can be a setting output voltage with this evaluation condition.

(*2) The maximum output current performance varies based on a voltage difference between an input voltage and an output voltage, and external components and so on. Regarding detail of this variation, please refer to OPERATIONAL EXPLANATION and NOTE ON USE section.

(*3) Design value

(*4) SHORT PROTECTION with LATCH is not available if $V_{OUT1}$ is 1.2V less than.

(*5) "H" = $V_{IN}$ ~ $V_{IN}$ -1.2V, "L" = 0.1V ~ -0.1V



Downloaded from Arrow.com.

# ■ELECTRICAL CHARACTERISTICS

SPEC Table

| Nominal Output Voltage $V_{OUT(T)}$ | $V_{OUT1}$ (V) | $V_{OUT1-2}$ (V) | | | $V_{IN}$ (V) | Iq (nA) | |
|---|---|---|---|---|---|---|---|
| | <T-1> | <E-1> | <E-2> | <E-3> | <C-1> | <E-4> | <E-5> |
| | TYP. | MIN. | TYP. | MAX. | $V_{IN}$ | TYP. | MAX. |
| 0.50 | 0.500 | 0.460 | 0.480 | 0.500 | 1.80 | 200 | 600 |
| 0.60 | 0.600 | 0.560 | 0.580 | 0.600 | 1.80 | 200 | 600 |
| 0.70 | 0.700 | 0.660 | 0.680 | 0.700 | 1.80 | 200 | 600 |
| 0.80 | 0.800 | 0.760 | 0.780 | 0.800 | 1.80 | 200 | 600 |
| 0.90 | 0.900 | 0.860 | 0.880 | 0.900 | 1.80 | 200 | 600 |
| 1.00 | 1.000 | 0.960 | 0.980 | 1.000 | 1.80 | 200 | 600 |
| 1.10 | 1.100 | 1.058 | 1.080 | 1.102 | 1.80 | 200 | 600 |
| 1.20 | 1.200 | 1.156 | 1.180 | 1.204 | 1.80 | 200 | 600 |
| 1.30 | 1.300 | 1.254 | 1.280 | 1.306 | 1.80 | 200 | 600 |
| 1.40 | 1.400 | 1.352 | 1.380 | 1.408 | 1.90 | 200 | 600 |
| 1.50 | 1.500 | 1.450 | 1.480 | 1.510 | 2.00 | 200 | 600 |
| 1.60 | 1.600 | 1.548 | 1.580 | 1.612 | 2.10 | 200 | 600 |
| 1.70 | 1.700 | 1.646 | 1.680 | 1.714 | 2.20 | 200 | 600 |
| 1.80 | 1.800 | 1.744 | 1.780 | 1.816 | 2.30 | 200 | 600 |
| 1.90 | 1.900 | 1.842 | 1.880 | 1.918 | 2.40 | 200 | 600 |
| 2.00 | 2.000 | 1.940 | 1.980 | 2.020 | 2.50 | 210 | 630 |
| 2.10 | 2.100 | 2.038 | 2.080 | 2.122 | 2.60 | 210 | 630 |
| 2.20 | 2.200 | 2.136 | 2.180 | 2.224 | 2.70 | 210 | 630 |
| 2.30 | 2.300 | 2.234 | 2.280 | 2.326 | 2.80 | 210 | 630 |
| 2.40 | 2.400 | 2.332 | 2.380 | 2.428 | 2.90 | 210 | 630 |
| 2.50 | 2.500 | 2.430 | 2.480 | 2.530 | 3.00 | 220 | 660 |
| 2.60 | 2.600 | 2.528 | 2.580 | 2.632 | 3.10 | 220 | 660 |
| 2.70 | 2.700 | 2.626 | 2.680 | 2.734 | 3.20 | 220 | 660 |
| 2.80 | 2.800 | 2.724 | 2.780 | 2.836 | 3.30 | 220 | 660 |
| 2.90 | 2.900 | 2.822 | 2.880 | 2.938 | 3.40 | 230 | 690 |
| 3.00 | 3.000 | 2.920 | 2.980 | 3.040 | 3.50 | 230 | 690 |
| 3.10 | 3.100 | 3.018 | 3.080 | 3.142 | 3.60 | 230 | 690 |
| 3.20 | 3.200 | 3.116 | 3.180 | 3.244 | 3.70 | 240 | 720 |
| 3.30 | 3.300 | 3.214 | 3.280 | 3.346 | 3.80 | 240 | 720 |
| 3.40 | 3.400 | 3.312 | 3.380 | 3.448 | 3.90 | 240 | 720 |
| 3.50 | 3.500 | 3.410 | 3.480 | 3.550 | 4.00 | 250 | 750 |
| 3.60 | 3.600 | 3.508 | 3.580 | 3.652 | 4.10 | 250 | 750 |

With regard to other voltage, please contact our sales representative.



Downloaded from Arrow.com.

## ■TEST CIRCUITS

< Test Circuit No.① >

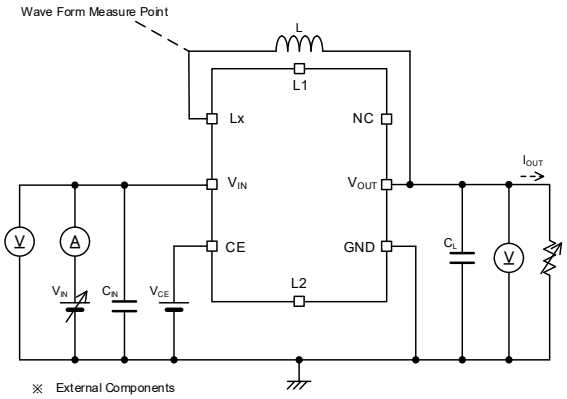


※ External Components

L : 2.2μH(For test process)
$C_{IN}$ : 10μF
$C_L$ : 10μF

< Test Circuit No.② >

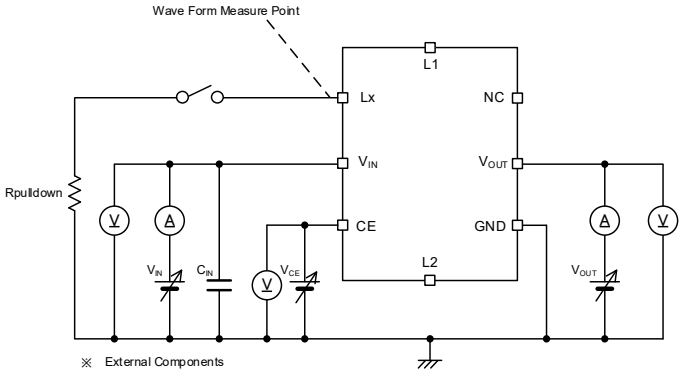


※ External Components

$C_{IN}$ : 10μF
Rpulldown : 100Ω

< Test Circuit No.③ >

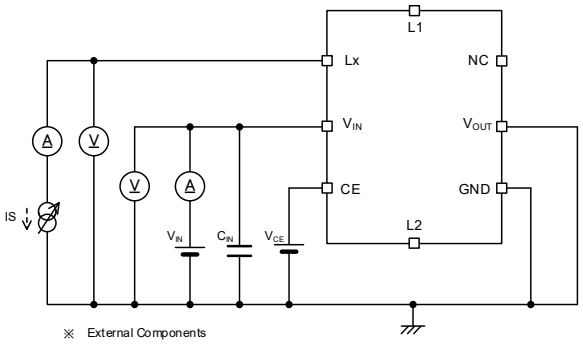


※ External Components

$C_{IN}$ : 10μF

< Test Circuit No.④ >

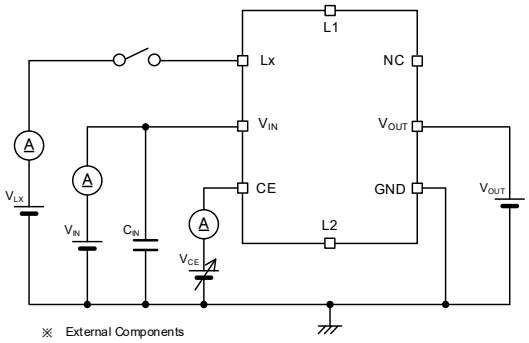


※ External Components

$C_{IN}$ : 0.1μF



Downloaded from Arrow.com.

## ■TYPICAL APPLICATION CIRCUIT

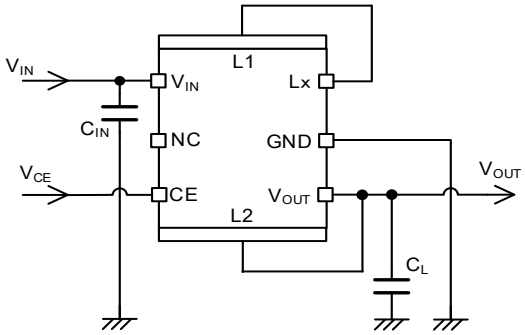


(NOTES):
The coil is exclusively for this product.
Please do not use it for any purpose other than this product.

【Typical Examples】

| | Manufacturer | Product Number | Value | Size |
|---|---|---|---|---|
| $C_{IN}$ | Murata | GRM188R61A106ME69 | 10μF/10V | 1.6 x 0.8 x 1.0mm |
| | Taiyo Yuden | LMK107BBJ106MALT | | |
| | TDK | C1608X5R1A106M | | |
| $C_L$ | Murata | GRM188R61A106ME69 | 10μF/10V | 1.6 x 0.8 x 1.0mm |
| | | GRM188R61A226ME15 | 22μF/10V | |
| | Taiyo Yuden | LMK107BBJ106MALT | 10μF/10V | |
| | | LMK107BBJ226MA | 22μF/10V | |
| | | JMK107BBJ226MA | 22μF/6.3V | |
| | TDK | C1608X5R1A106M | 10μF/10V | |
| | | C1608X5R1A226M | 22μF/10V | |

* Please select the components taking into consideration the rated voltage, rated current, and ceramic capacitor DC bias characteristics, etc.

* Use a ceramic capacitor with an execution capacitance value equal to or higher than the recommended component.
If a capacitor with a low effective capacitance value is used, the output voltage may become unstable.

* Please increase a capacitance value for $C_L$ in order to reduce output ripple voltages.
$C_L$ such as tantalum capacitors which have a larger ESR value can increase output ripple voltages.
If large-capacity capacitors such as electrolytic capacitors are connected in parallel, the inrush current may increase at startup and the output voltage may become unstable.



Downloaded from Arrow.com.

## ■OPERATIONAL EXPLANATION

The XCL232 series consists of a reference voltage supply, PFM comparator, Pch driver FET, Nch driver FET, current sensing circuit, PFM control circuit, CE control circuit, and others.

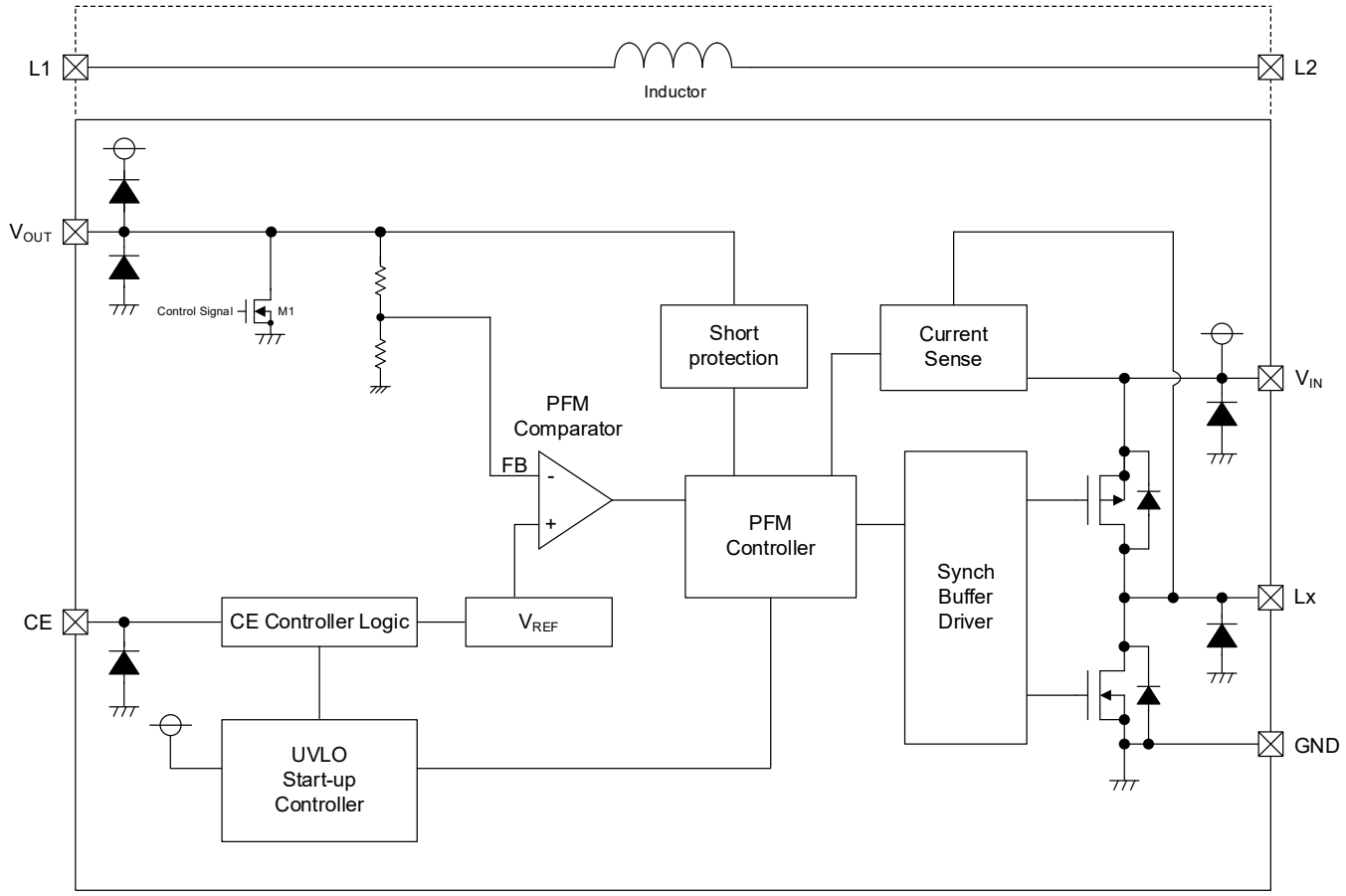


< BLOCK DIAGRAM >

The efficiency performance at a light load current is significantly improved compared to existing Torex products by implementing a current limit PFM as a control method and reducing a consumption current by IC itself.



Downloaded from Arrow.com.

# ■OPERATIONAL EXPLANATION (Continued)

<Normal operation>

This IC controls the output voltage by adjusting the following ①~③ operation intervals in response to the output current.

The $V_{OUT1}$ output voltage average values during actual operation depend on $V_{OUT1-2}$ and the ripple voltage during actual operation and are calculated as follows. For this reason, if the ripple voltage changes due to the influence of the input voltage, output voltage, or peripheral components, etc., the output voltage average value will change.

$$V_{OUT1} = V_{OUT1-2} + \text{Ripple Voltage} \times 1/2$$

①The feedback voltage (FB voltage) is the voltage that results from dividing the output voltage with the $V_{OUT}$ Controller logic circuit. The PFM comparator compares this FB voltage to $V_{REF}$. When the FB voltage is lower than $V_{REF}$, the PFM comparator sends a signal to the PFM control circuit to turn on the Pch driver FET.

The On Time to Pch driver FET can be obtained by the following equation.

$$t_{ON} = L \times I_{PFM} / (V_{IN} - V_{OUT})$$

②When the Pch driver FET turns on, the coil current increases until the coil current reaches PFM Switching Current ($I_{PFM}$). When the coil current reaches $I_{PFM}$, the Pch driver FET turns off and then the Nch driver FET turns on.

③ After the Nch driver FET turns on, the coil current will decrease and when the coil current goes down to approx. 0mA, the Nch driver FET will turn off.

The Pch driver FET and Nch driver FET remain off until the FB voltage becomes lower than the reference voltage $V_{REF}$.

The above ①~③ switching operations increase the FB voltage accompanying the output voltage increase, but if the PFM comparator determines the FB voltage is lower than the reference voltage $V_{REF}$ before the coil current reaches 0mA, the Nch driver FET turns off and the status moves to ①.

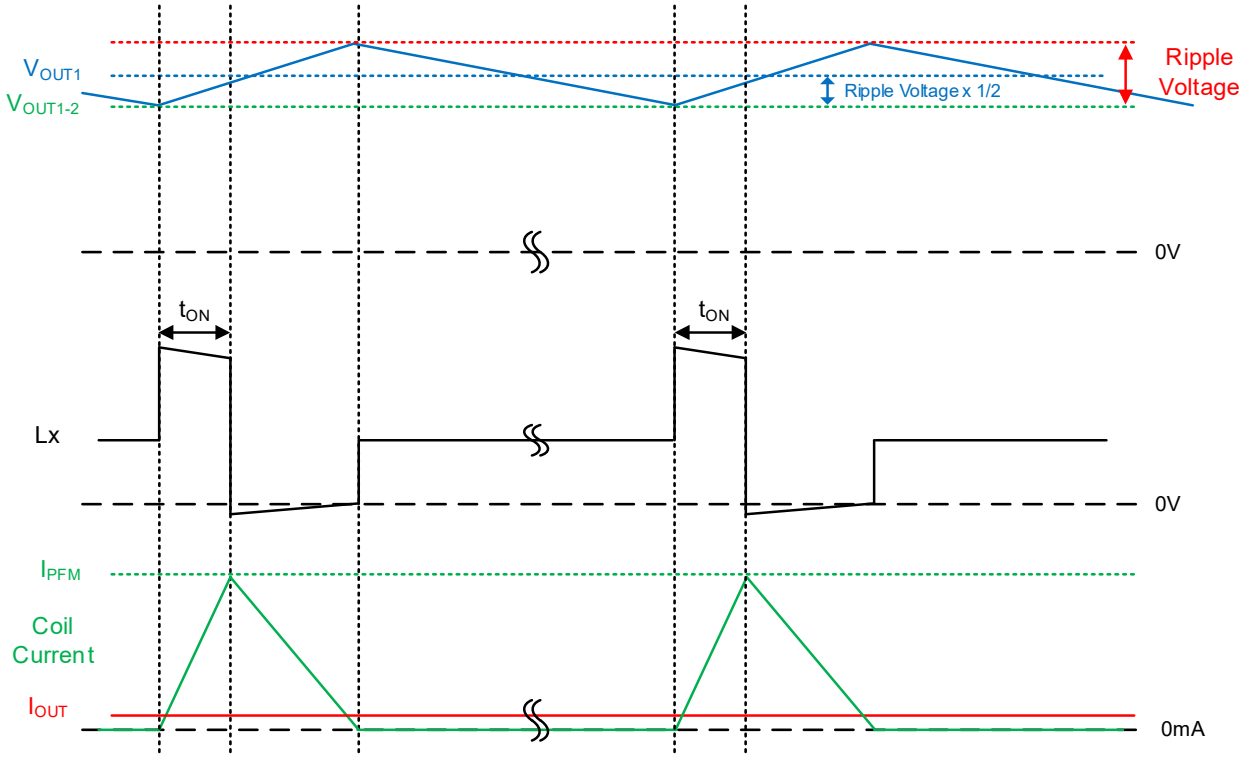




Downloaded from Arrow.com.

## ■OPERATIONAL EXPLANATION (Continued)

< Maximum on-time function, 100% Duty operation>

When the input / output potential difference decreases, the on-time required for the coil current to reach $I_{PFM}$ increases, and the output ripple voltage tends to increase. Therefore, under conditions where the input / output potential difference is small, excessive ripple voltage is suppressed by limiting the maximum on-time that the Pch driver FET can turn on after the FB voltage becomes higher than the reference voltage $V_{REF}$ to 3.0μs (TYP.).

If the input / output potential difference is further reduced, the FB voltage is always lower than the reference voltage $V_{REF}$, so the 100% duty operation is performed and the Pch driver FET is always on.

At 100% duty, the current consumption of the IC increases compared to normal operation.

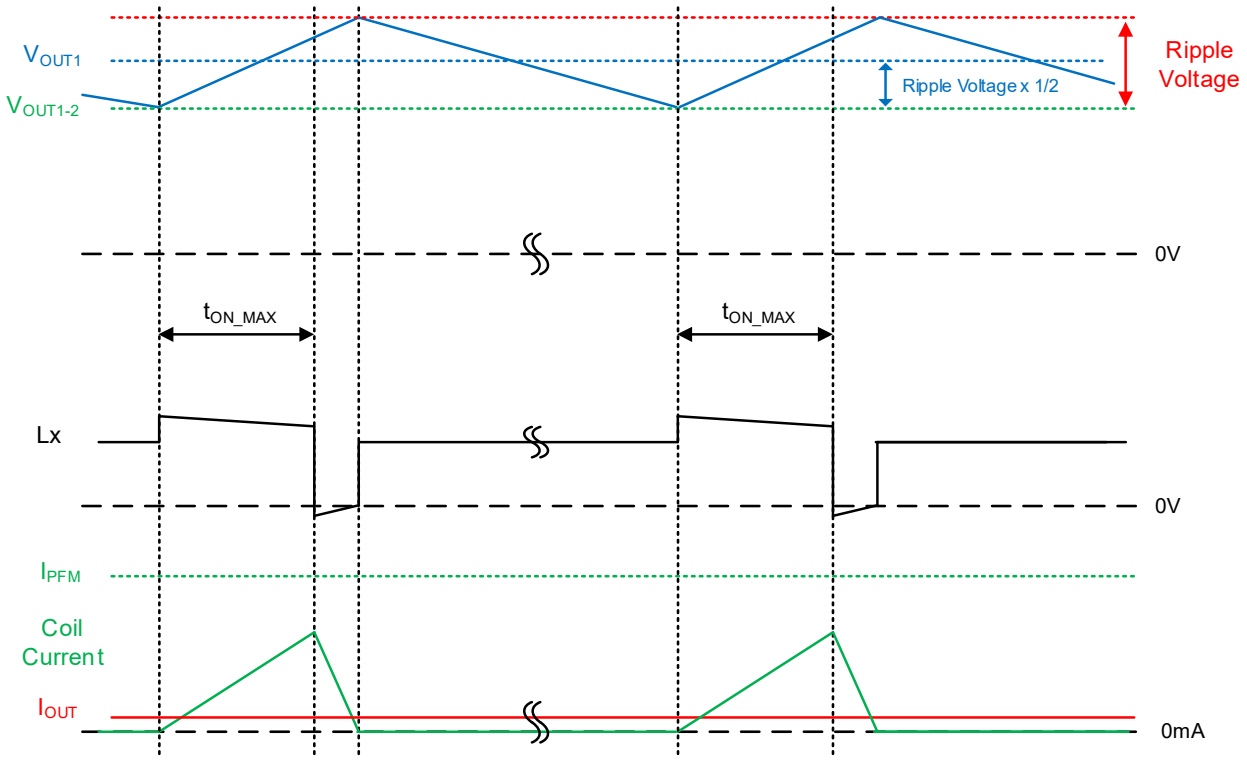




Downloaded from Arrow.com.

## ■OPERATIONAL EXPLANATION (Continued)

<CE function>

When "H" voltage ($V_{CEH}$) is fed to the CE pin, normal operation starts after raising the output voltage with Start-up Mode.

When the "L" voltage ($V_{CEL}$) is fed to the CE pin, it enters the stand-by state and the current consumption is suppressed to 0.0μA (TYP.). Additionally, Pch MOS driver FET and Nch MOS driver FET are turned off.

<Start-up Mode>

After “H” voltage ($V_{CEH}$) is fed to CE pin and UVLO function is released, by the time when FB voltage goes up to 0.9 x $V_{REF}$, the startup mode operates.

Unlike the normal operation, the start-up mode stops the operation of the short-circuit protection function and prevents the IC from being inadvertently stopped.

In order to suppress the inrush current, the peak current of the coil is limited to 0.7 x $I_{PFM}$, and the Nch driver FET does not turn on and the coil current flows through the parasitic diode of the Nch driver FET.

The rise time of the output voltage depends on the output capacitance and output current.

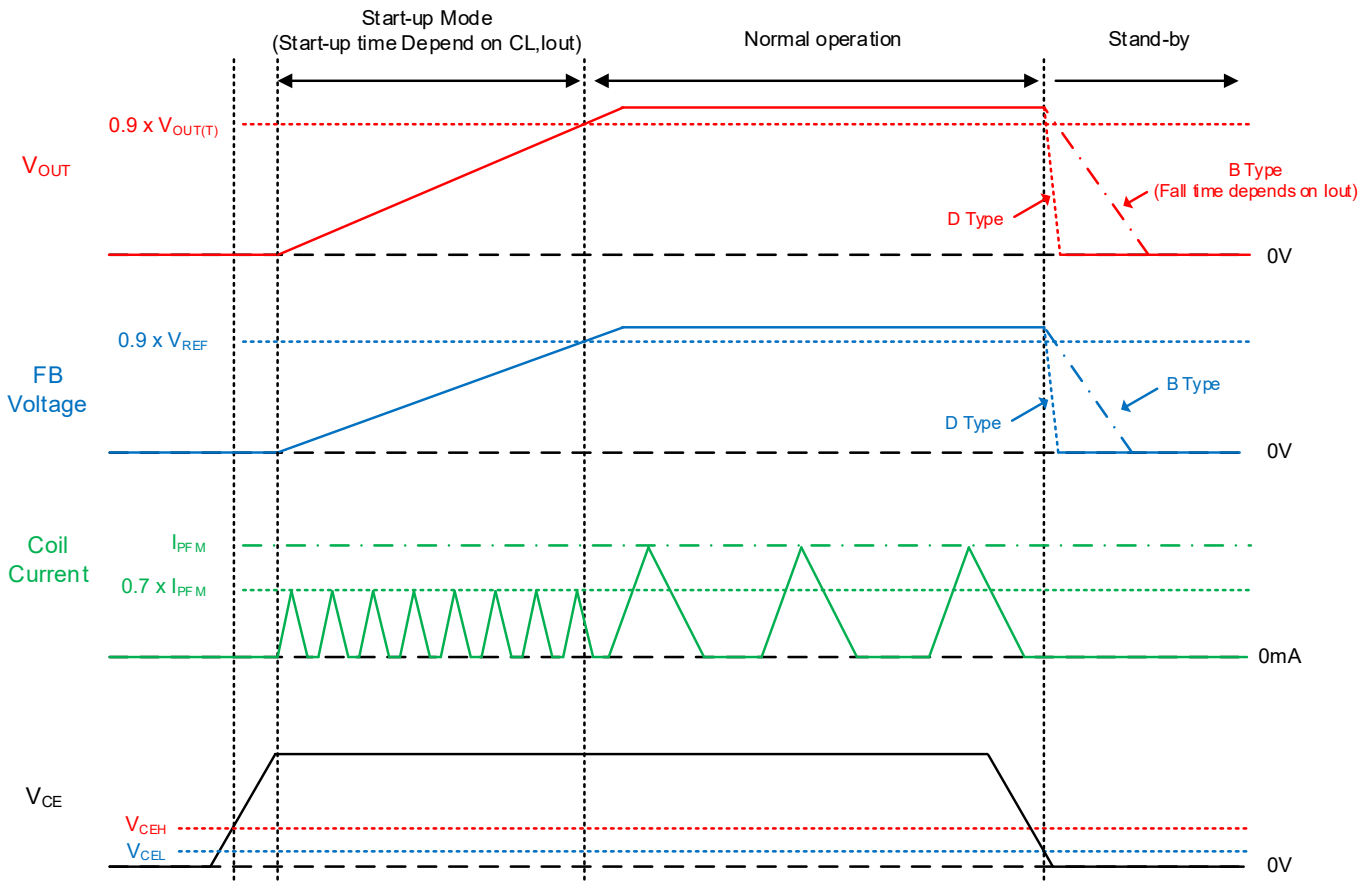


<UVLO function>

When the $V_{IN}$ voltage becomes UVLO Detect Voltage ($V_{UVLOD}$) or less, the UVLO function operates to forcibly turn off the Pch MOS driver FET to prevent erroneous pulse output due to operation instability of the internal circuit.

During the UVLO function, the Pch driver FET and Nch driver FET turn off, and the Nch FET M1 between the $V_{OUT}$ pin and GND pin turns on to discharge the output capacitance and make the output voltage be lower.

When the $V_{IN}$ voltage becomes UVLO Release Voltage ($V_{UVLOR}$) or more, the UVLO function is canceled. After the UVLO function is canceled, the output voltage rises with the startup mode, and then the normal operation is performed.

Moreover, during the UVLO operation, the current consumption increases because the internal circuit is operating and the switching operation is stopped, not the stand-by state.



Downloaded from Arrow.com.

## ■OPERATIONAL EXPLANATION (Continued)

<Short protection function>

・Case (a) : $V_{OUT(T)}$ ≧1.2V

The short-circuit protection function monitors the $V_{OUT}$ pin voltage, and if the $V_{OUT}$ pin voltage drops below the Short Protection Threshold Voltage ($V_{SHORT}$) due to a short circuit or overcurrent, the short circuit protection function operates.

When the short-circuit protection function is activated, the Pch driver FET and Nch driver FET are held off. If the $V_{OUT}$ pin voltage exceeds the Short Protection Threshold Voltage ($V_{SHORT}$) after the short-circuit protection function is activated, normal operation resumes.

To cancel the short-circuit protection function, it is necessary to start the IC after putting the IC in the standby state with the CE function, or to raise the input voltage after setting the input voltage below the UVLO detection voltage ($V_{UVLOD}$).

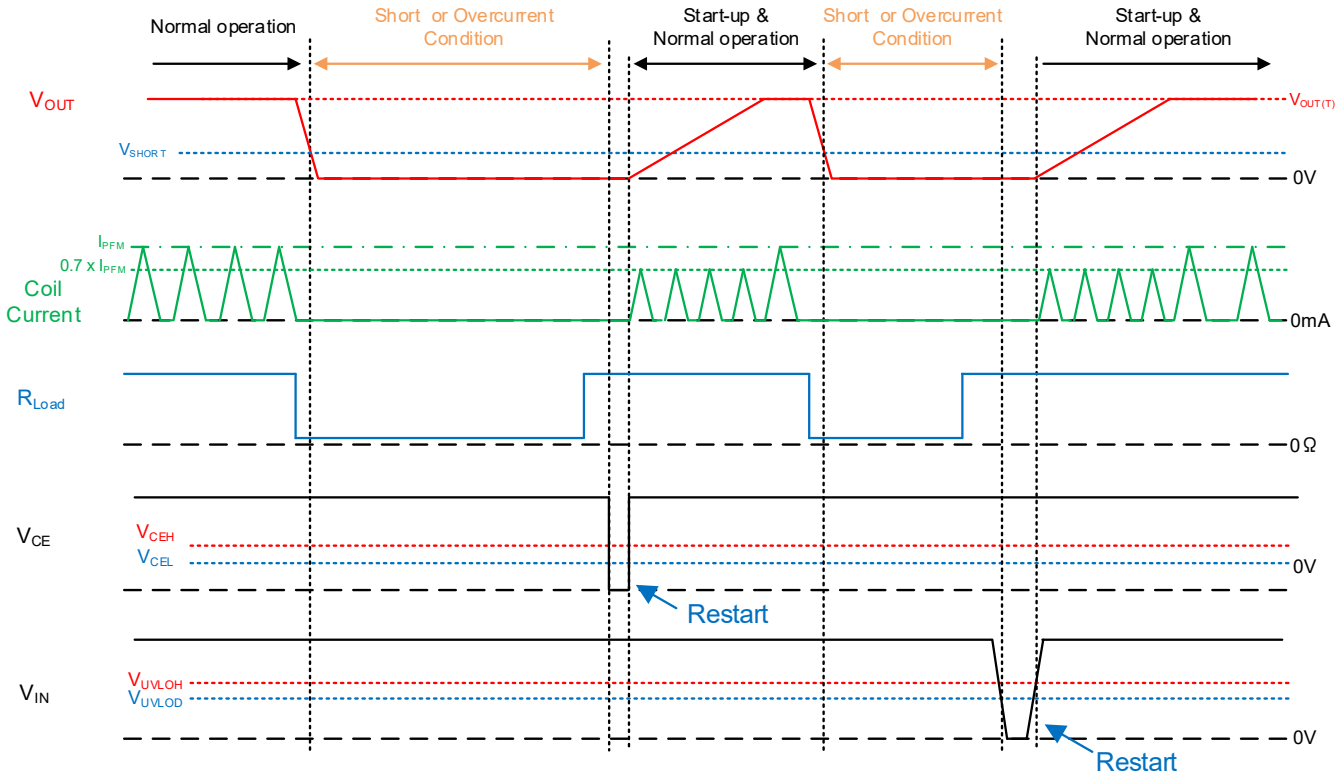


・Case (b) : $V_{OUT(T)}$ ＜1.2V

The short-circuit protection function is not implemented in the part numbers where $V_{OUT(T)}$ is less than 1.2V. If a short circuit or overcurrent occurs, the output voltage will drop and switching operation will continue.

When the short-circuit state or excessive output current is released, the output voltage rises quickly to the set output voltage.

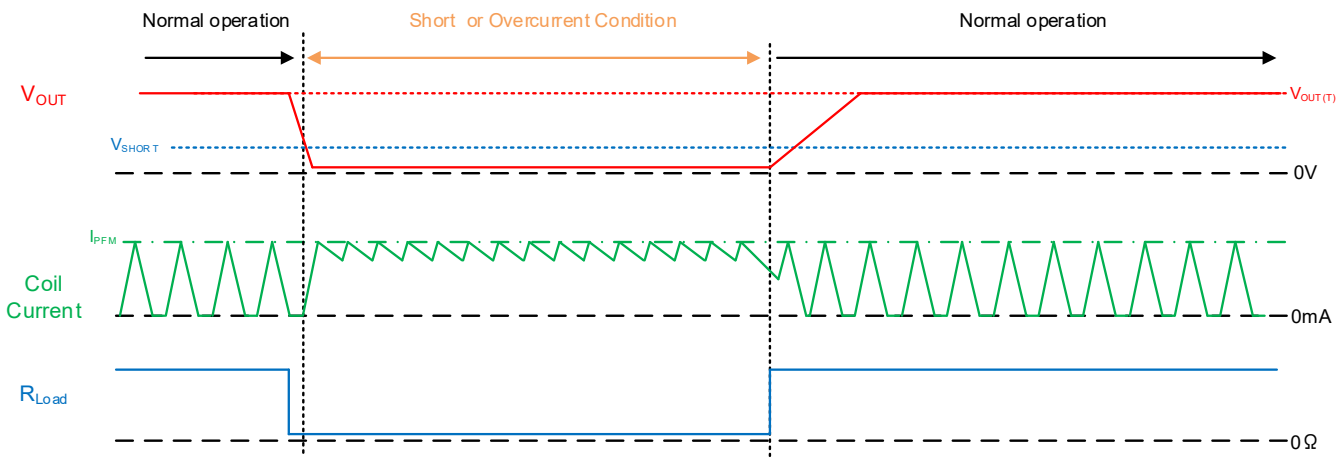




Downloaded from Arrow.com.

# ■OPERATIONAL EXPLANATION (Continued)

< $C_L$ Discharge function (D type)>

On the XCL232 series, a $C_L$ discharge function is available as an option.

$C_L$ discharge function turns on the Nch FET M1 between the $V_{OUT}$ pin and GND pin when the stand-by condition in order to discharge the output capacitance quickly and make the output voltage be lower.

This prevents malfunctioning of the application in the event that a charge remains on $C_L$ when the IC is stand-by state.

The discharge time is determined by $C_L$ and the $C_L$ discharge resistance $R_{DCHG}$, including the Nch FET M1.

the discharge time of the output voltage is calculated by means of the equation below.

$$V = V_{OUT(T)} \times e^{-t/\tau}$$

$$t = \tau \ln(V_{OUT(T)} / V)$$

| | |
|---|---|
| V | : Output voltage during discharge |
| $V_{OUT(T)}$ | : Output voltage |
| t | : Discharge time |
| $C_L$ | : Effective capacitance of Output capacitor |
| $R_{DCHG}$ | : $C_L$ auto-discharge resistance |
| $\tau$ | : $C_L \times R_{DCHG}$ |

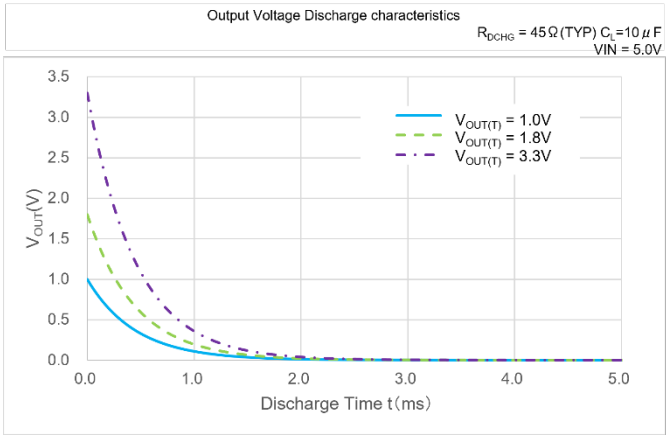




Downloaded from Arrow.com.

## ■NOTE ON USE

1. Be careful not to exceed the absolute maximum ratings for externally connected components and this IC.
   If it exceeds the absolute maximum rating, it may deteriorate or be destroyed.
   Also, if used under conditions outside the recommended operating range, the IC may not operate normally or may cause deterioration.

2. The DC/DC converter characteristics greatly depend not only on the characteristics of this IC but also on those of externally connected components, so refer to EXTERNAL COMPONENTS SELECTION and the specifications of each component and be careful when selecting the components. Be especially careful of the characteristics of the capacitor used for the load capacity $C_L$ and use a capacitor with B characteristics (JIS Standard) or an X7R/X5R (EIA Standard) ceramic capacitor.

3. The CE pin does not have an internal pull-up or pull-down, etc. Apply the prescribed voltage to the CE pin.
   If an intermediate voltage is fed to the CE pins, a through current will flow through the input stage of the CE pins, increasing current consumption.

4. At light loads or when IC operation is stopped, leakage current from the Pch driver FET may cause the output voltage to rise.

5. Switching operation may be performed continuously due to internal delay or input offset of the PFM comparator circuit.
   If the switching operation continues, the output ripple voltage increases and the output voltage rises as the ripple voltage increases.

6. When the input / output potential difference is small, the ripple voltage increases and the output voltage may increase.

7. Since the short-circuit protection function is not implemented in the part number where both of or either $V_{OUT(T)}$ is less than 1.2V, the coil current may be superposed under the condition of high input voltage and excessive output current.

8. During start-up mode, the peak current of the coil is set lower than in normal operation, so the output voltage may not rise under conditions where the output current is large during start-up.

9. To suppress current consumption, UVLO detection is performed only for a certain period after the Pch driver FET is turned on. For this reason, the UVLO function may not operate if the VIN pin voltage instantaneously drops below the UVLO detection voltage ($V_{UVLOD}$).

10. Under the conditions of Vin≦2.7V, set output voltage ≦1.0V and Ta≧65℃, the efficiency can drastically drop.
    Normally after the Nch driver FET turns on, the coil current falls to 0mA, and then Nch driver FET turns off.
    Under the above conditions, however, before the coil current falls to 0mA, Nch driver FET turns off and its loss increases, which leads to the drop of efficiency.

11. This IC is a Inductor Built-in product, do not place it in an environment with a strong magnetic field such as near a magnet.
    The influence of a strong magnetic field may cause a decrease in inductance value, deterioration of efficiency, and abnormal operation of the IC.

12. For temporary, transitional voltage drop or voltage rising phenomenon, the IC is liable to malfunction should the ratings be exceeded.

13. Torex places an importance on improving our products and their reliability. We request that users incorporate fail-safe designs and post-aging protection treatment when using Torex products in their systems.



Downloaded from Arrow.com.

## ■NOTE ON USE (Continued)

14. Instructions of pattern layouts

(1) In order to stabilize $V_{IN}$ voltage level, we recommend that a by-pass capacitor ($C_{IN}$) be connected as close as possible to the $V_{IN}$ & GND pins.

(2) Please mount each external component as close to the IC as possible.

(3) Wire external components as close to the IC as possible and use thick, short connecting traces to reduce the circuit impedance.

(4) Make sure that the PCB GND traces are as thick as possible, as variations in ground potential caused by high ground currents at the time of switching may result in instability of the IC.

(5) The IC is a heat-generating component, and heat dissipation measures may be required depending on the conditions of use. If necessary, perform thermal design with PCB layout, etc.

< Reference pattern layout >

Layer 1

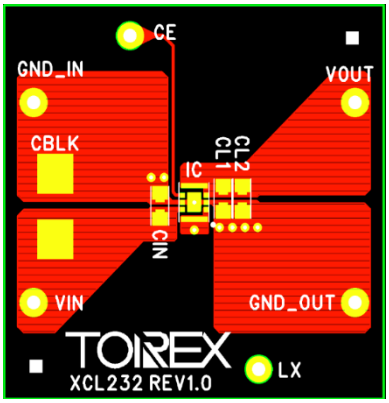


Layer 2

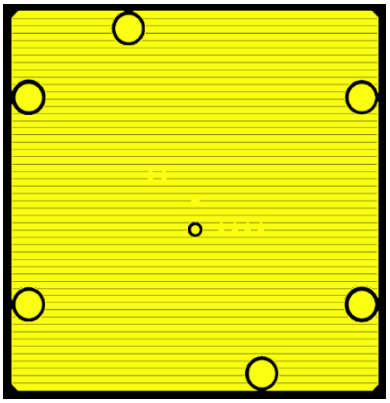

Layer 3

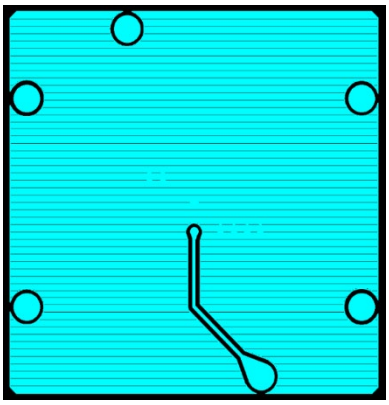

Layer 4

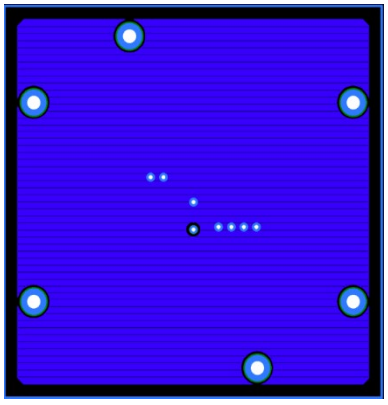



Downloaded from Arrow.com.

## ■Notes on handling of product

(1) The coil mounted on this product complies with the general surface mount type chip inductor specifications, and may have scratches, flux stains, etc.

(2) Do not use this product in the following environments. Places exposed to water or salt water, places where condensation occurs, places where toxic gases (hydrogen sulfide, zinc acid, chlorine, ammonia, etc.) are present.

(3) Please do not wash this product with solvent.

## ■Notes on mounting

(1) Please set the mounting position accuracy within 0.05 mm.

(2) The proper position of mounting is based on the coil terminal



Downloaded from Arrow.com.

# ■TYPICAL PERFORMANCE CHARACTERISTICS

(1) Efficiency vs. Output Current

$V_{OUT}$=1.8V

$C_{IN}$ = LMK107BBJ106MA(10μF/10V)
$C_L$ = JMK107BBJ226MA(22μF/6.3V)

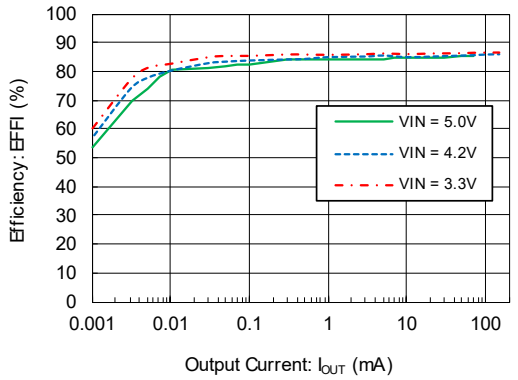


$V_{OUT}$=3.3V

$C_{IN}$ = LMK107BBJ106MA(10μF/10V)
$C_L$ = JMK107BBJ226MA(22μF/6.3V)

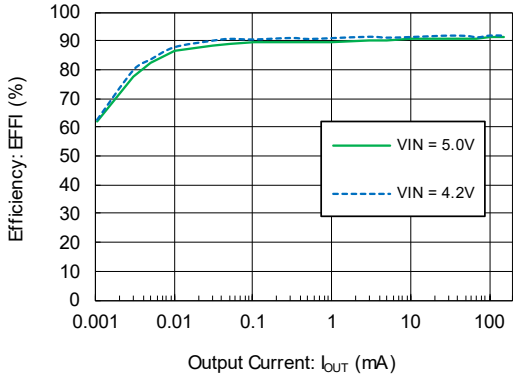


(2) Output Voltage vs. Output Current

$V_{OUT}$=1.8V

$C_{IN}$ = LMK107BBJ106MA(10μF/10V)
$C_L$ = JMK107BBJ226MA(22μF/6.3V)

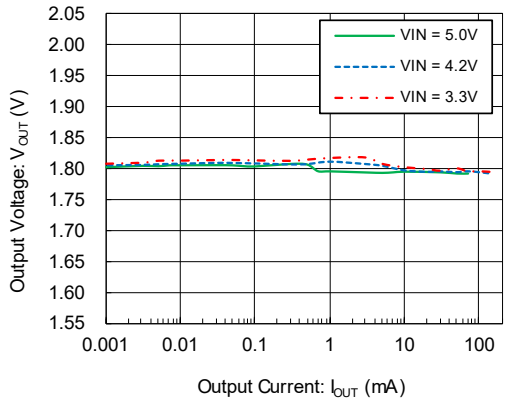


$V_{OUT}$=3.3V

$C_{IN}$ = LMK107BBJ106MA(10μF/10V)
$C_L$ = JMK107BBJ226MA(22μF/6.3V)

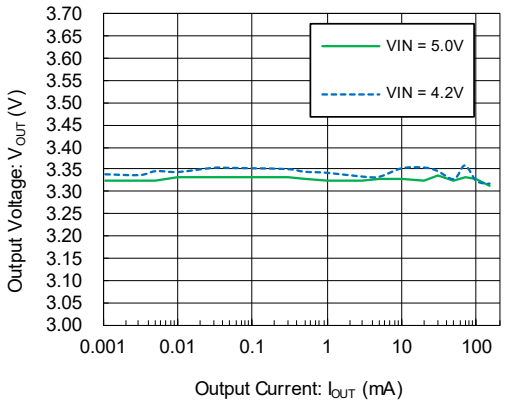


(3) Ripple Voltage vs. Output Current

$V_{OUT}$=1.8V

$C_{IN}$ = LMK107BBJ106MA(10μF/10V)
$C_L$ = JMK107BBJ226MA(22μF/6.3V)

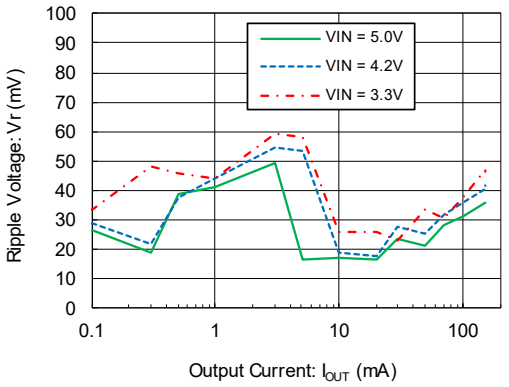


$V_{OUT}$=3.3V

$C_{IN}$ = LMK107BBJ106MA(10μF/10V)
$C_L$ = JMK107BBJ226MA(22μF/6.3V)

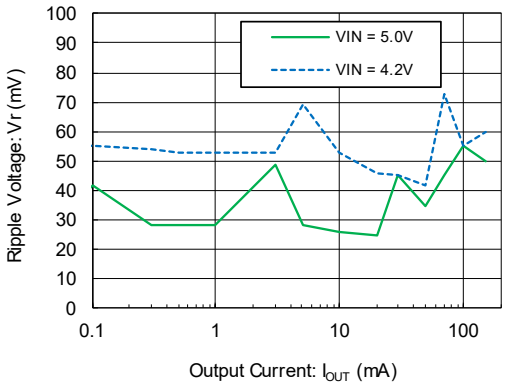




Downloaded from Arrow.com.

## ■TYPICAL PERFORMANCE CHARACTERISTICS (Continued)

(4) Output Voltage vs. Ambient

$V_{OUT}$=1.8V

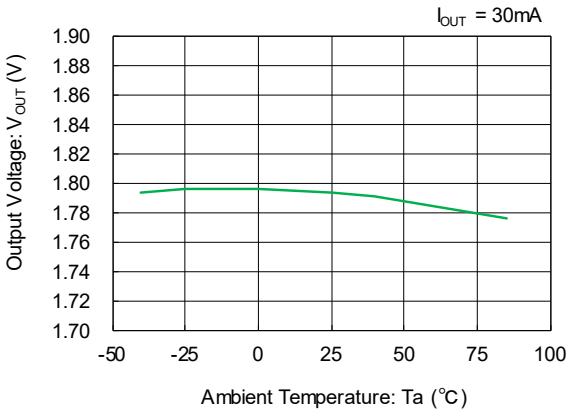


(5) UVLO Voltage vs. Ambient

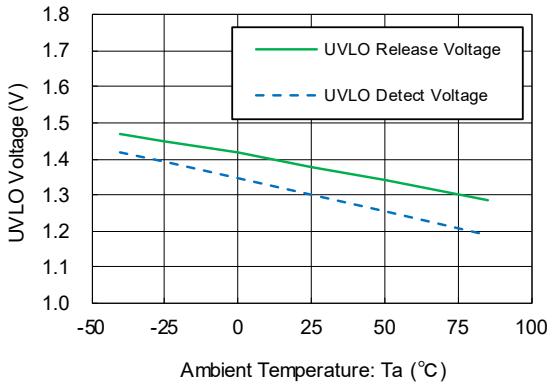


(6) Quiescent Current vs. Ambient Temperature

$V_{OUT}$=0.6V

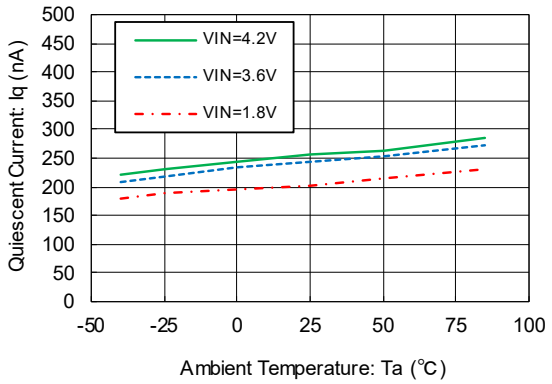


(7) Stand-by Current vs. Ambient Temperature

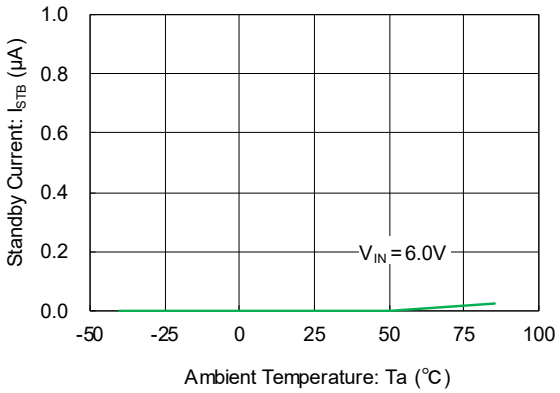


(8) PFM Switching Current vs. Ambient Temperature

$V_{OUT}$=0.6V

$C_{IN}$ = LMK107BBJ106MALT(10μF/10V)

$C_L$ = LMK107BBJ106MALT(10μF/10V) ×2

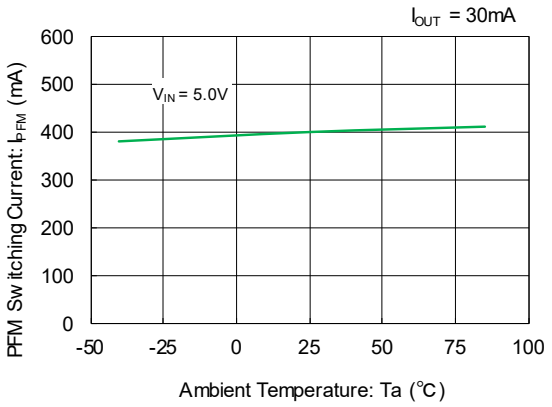


(9) Lx SW "H" ON Resistance vs. Ambient Temperature

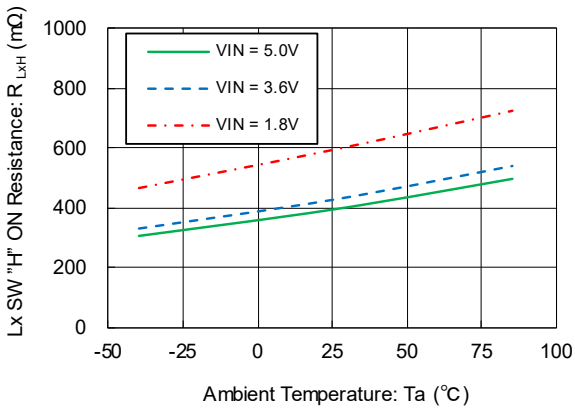




Downloaded from Arrow.com.

## ■TYPICAL PERFORMANCE CHARACTERISTICS (Continued)

(10) Lx SW "L" ON Resistanc vs. Ambient Temperature

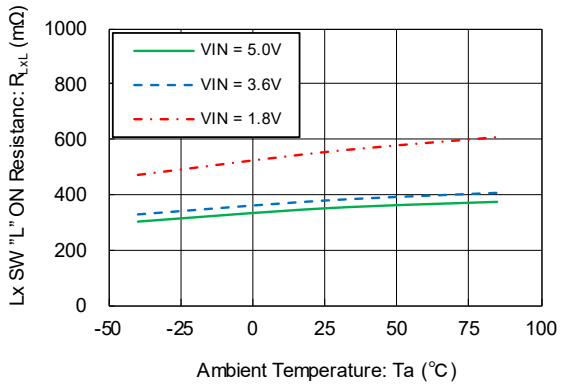


(11) Lx SW "H" Leakage Current vs. Ambient Temperature

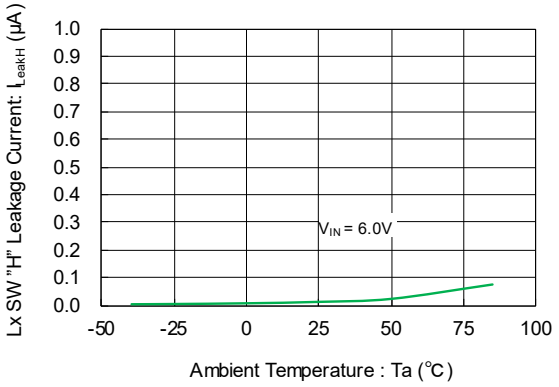


(12) Lx SW "L" Leakage Current vs. Ambient Temperature

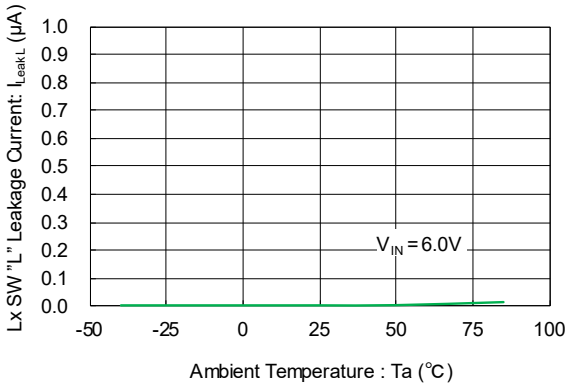


(13) CE "H" Voltage vs. Ambient Temperature

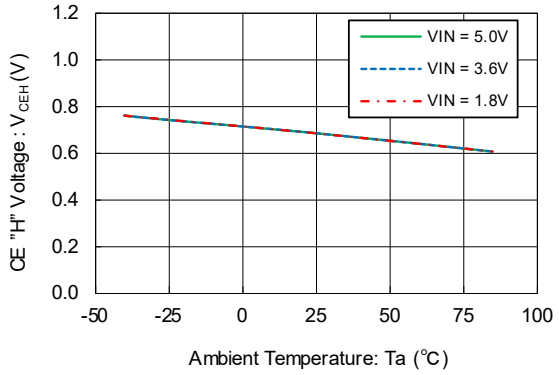


(14) CE "L" Voltage vs. Ambient Temperature

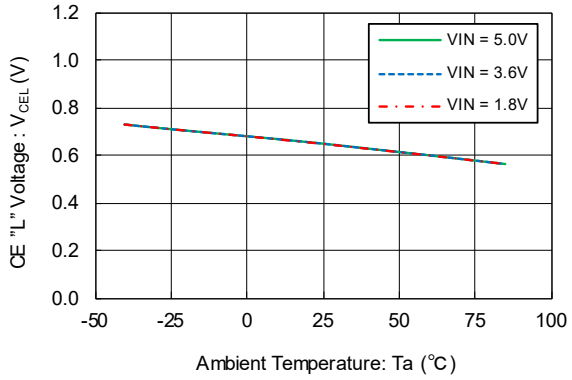


(15) Short Protection Threshold vs. Ambient Temperature

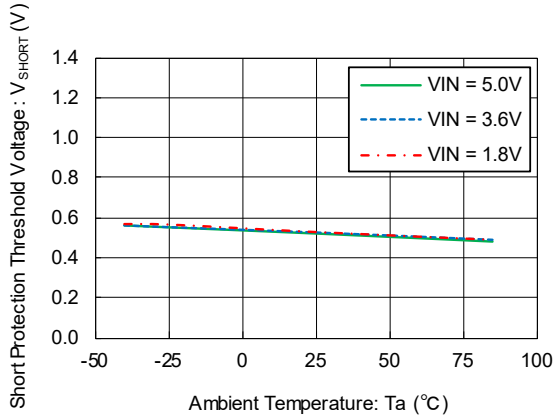




Downloaded from Arrow.com.

## ■TYPICAL PERFORMANCE CHARACTERISTICS (Continued)

(16) $C_L$ Discharge Resistance vs. Ambient Temperature

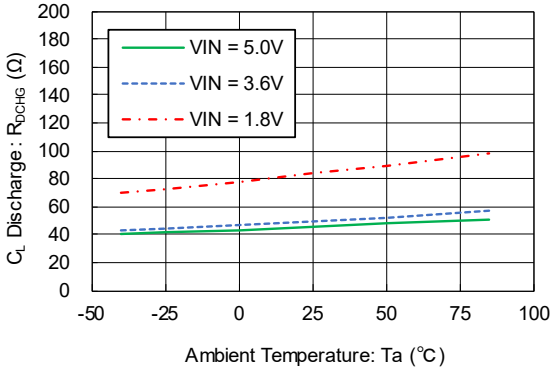




Downloaded from Arrow.com.

# ■TYPICAL PERFORMANCE CHARACTERISTICS (Continued)

## (17) Load Transient Respones

$V_{OUT}$=1.8V
$V_{IN}$ = 3.6V ,$I_{OUT}$ = 10μA ⇒ 50mA ,tr = 5μs
$C_{IN}$ = LMK107BBJ106MALT(10μF/10V)
$C_L$ = LMK107BBJ226MA(22μF/10V) ×2

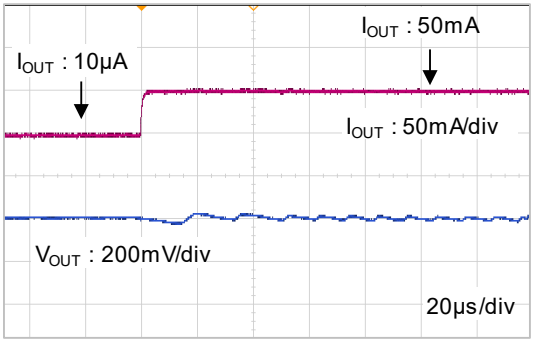


$V_{OUT}$=1.8V
$V_{IN}$ = 3.6V ,$I_{OUT}$ = 50mA ⇒ 10μA ,tf = 5μs
$C_{IN}$ = LMK107BBJ106MALT(10μF/10V)
$C_L$ = LMK107BBJ226MA(22μF/10V) ×2

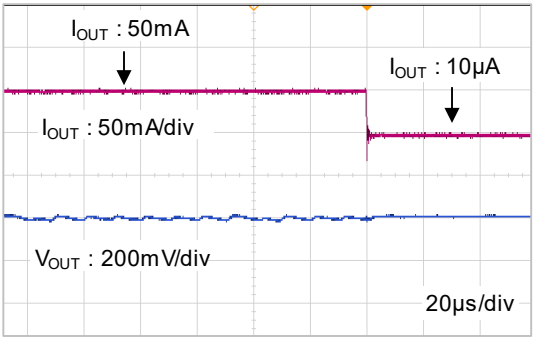


$V_{OUT}$=3.0V
$V_{IN}$ = 3.6V ,$I_{OUT}$ = 10μA ⇒ 50mA ,tr = 5μs
$C_{IN}$ = LMK107BBJ106MALT(10μF/10V)
$C_L$ = LMK107BBJ226MA(22μF/10V) ×2

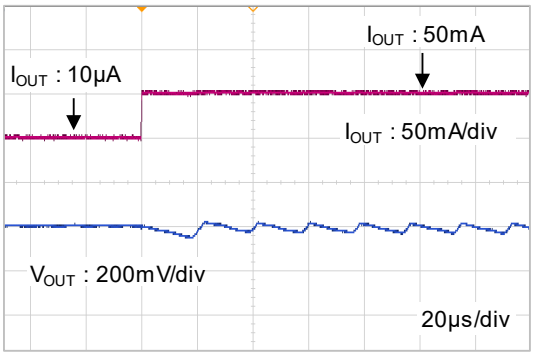


$V_{OUT}$=3.0V
$V_{IN}$ = 3.6V ,$I_{OUT}$ = 50mA ⇒ 10μA ,tf = 5μs
$C_{IN}$ = LMK107BBJ106MALT(10μF/10V)
$C_L$ = LMK107BBJ226MA(22μF/10V) ×2

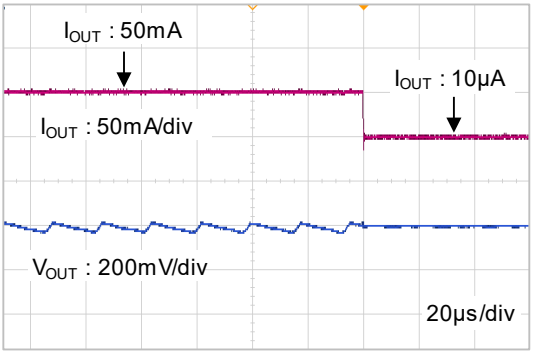


## (18) Startup Mode

$V_{OUT}$=1.8V
$V_{IN}$ = 3.6V ,$V_{CE}$ = 0.0V ⇒ 3.6V ,$I_{OUT}$ = 50mA ,tr = 5μs
$C_{IN}$ = LMK107BBJ106MALT(10μF/10V)
$C_L$ = LMK107BBJ106MALT(10μF/10V) ×2

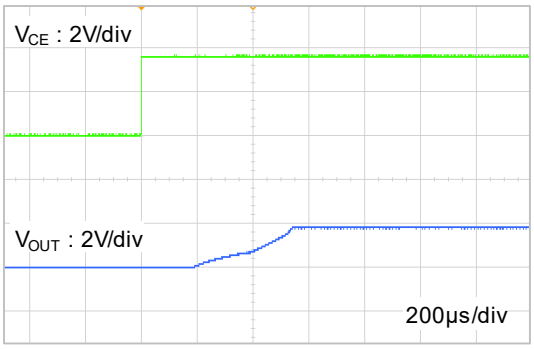


$V_{OUT}$=3.0V
$V_{IN}$ = 3.6V ,$V_{CE}$ = 0.0V ⇒ 3.6V ,$I_{OUT}$ = 50mA ,tr = 5μs
$C_{IN}$ = LMK107BBJ106MALT(10μF/10V)
$C_L$ = LMK107BBJ106MALT(10μF/10V) ×2

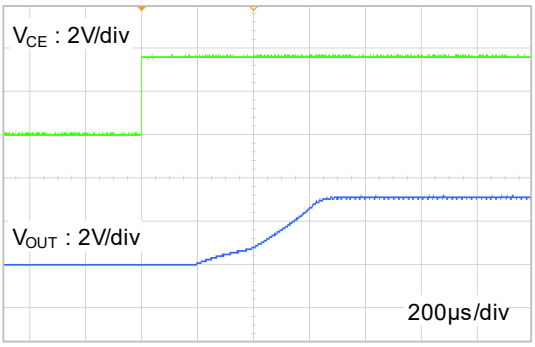




Downloaded from Arrow.com.

## ■PACKAGING INFORMATION

For the latest package information go to, www.torexsemi.com/technical-support/packages

| PACKAGE | OUTLINE / LAND PATTERN | THERMAL CHARACTERISTICS |
|---|---|---|
| CL-2025-03 | CL-2025-03 PKG | CL-2025-03 Power Dissipation |



Downloaded from Arrow.com.

# ■MARKING RULE

●CL-2025-03

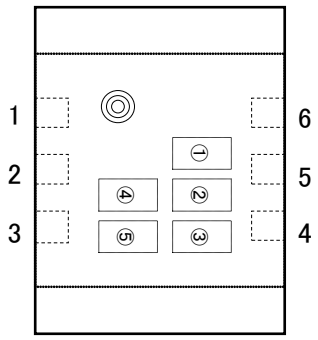


Mark① represents product series.

| MARK | PRODUCT SERIES |
|---|---|
| A | XCL232***1KR-G |

Mark② represents the registered setting, output voltage.

| SYMBOL | Type | OUTPUT VOLTAGE(V) | PRODUCT SERIES |
|---|---|---|---|
| 0 | B | 0.* | XCL232B0*1KR-G |
| 1 | | 1.* | XCL232B1*1KR-G |
| 2 | | 2.* | XCL232B2*1KR-G |
| 3 | | 3.* | XCL232B3*1KR-G |
| 4 | D | 0.* | XCL232D0*1KR-G |
| 5 | | 1.* | XCL232D1*1KR-G |
| 6 | | 2.* | XCL232D2*1KR-G |
| 7 | | 3.* | XCL232D3*1KR-G |

Mark③ represents the fractional part of the output voltage.

| OUTPUT VOLTAGE(V) | SYMBOL | PRODUCT SERIES |
|---|---|---|
| *.00 | 0 | XCL232**01KR-G |
| *.05 | A | XCL232**A1KR-G |
| *.10 | 1 | XCL232**11KR-G |
| *.15 | B | XCL232**B1KR-G |
| *.20 | 2 | XCL232**21KR-G |
| *.25 | C | XCL232**C1KR-G |
| *.30 | 3 | XCL232**31KR-G |
| *.35 | D | XCL232**D1KR-G |
| *.40 | 4 | XCL232**41KR-G |
| *.45 | E | XCL232**E1KR-G |
| *.50 | 5 | XCL232**51KR-G |
| *.55 | F | XCL232**F1KR-G |
| *.60 | 6 | XCL232**61KR-G |
| *.65 | H | XCL232**H1KR-G |
| *.70 | 7 | XCL232**71KR-G |
| *.75 | K | XCL232**K1KR-G |
| *.80 | 8 | XCL232**81KR-G |
| *.85 | L | XCL232**L1KR-G |
| *.90 | 9 | XCL232**91KR-G |
| *.95 | M | XCL232**M1KR-G |

Mark④,⑤ represents production lot number

01～09、0A～0Z、11～9Z、A1～A9、AA～ZZ、B1～ZZ in order.

(G, I, J, O, Q, W excluded) * No character inversion used.



Downloaded from Arrow.com.

1. The product and product specifications contained herein are subject to change without notice to improve performance characteristics. Consult us, or our representatives before use, to confirm that the information in this datasheet is up to date.

2. The information in this datasheet is intended to illustrate the operation and characteristics of our products. We neither make warranties or representations with respect to the accuracy or completeness of the information contained in this datasheet nor grant any license to any intellectual property rights of ours or any third party concerning with the information in this datasheet.

3. Applicable export control laws and regulations should be complied and the procedures required by such laws and regulations should also be followed, when the product or any information contained in this datasheet is exported.

4. The product is neither intended nor warranted for use in equipment of systems which require extremely high levels of quality and/or reliability and/or a malfunction or failure which may cause loss of human life, bodily injury, serious property damage including but not limited to devices or equipment used in 1) nuclear facilities, 2) aerospace industry, 3) medical facilities, 4) automobile industry and other transportation industry and 5) safety devices and safety equipment to control combustions and explosions. Do not use the product for the above use unless agreed by us in writing in advance.

5. Although we make continuous efforts to improve the quality and reliability of our products; nevertheless Semiconductors are likely to fail with a certain probability. So in order to prevent personal injury and/or property damage resulting from such failure, customers are required to incorporate adequate safety measures in their designs, such as system fail safes, redundancy and fire prevention features.

6. Our products are not designed to be Radiation-resistant.

7. Please use the product listed in this datasheet within the specified ranges.

8. We assume no responsibility for damage or loss due to abnormal use.

9. All rights reserved. No part of this datasheet may be copied or reproduced unless agreed by Torex Semiconductor Ltd in writing in advance.

TOREX SEMICONDUCTOR LTD.



Downloaded from Arrow.com.