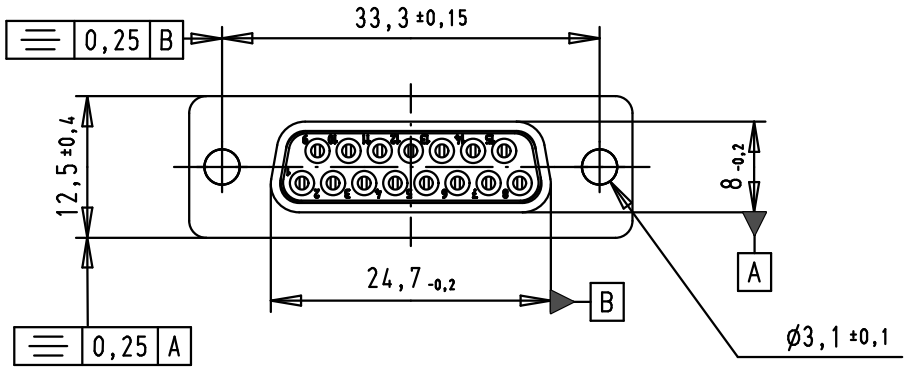

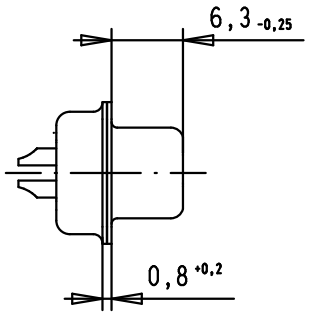

Solder buckets for AWG 20 Max

SPECIFICATION

Performance level	PL2
Filter type	C
Capacitance	3900pf±20%
Working Voltage	100v
Current Rating	7.5A
Insulation Resistance	>1GΩ

FREQUENCY (MHz)	ATTENUATION dB
5	6dB
10	11dB
50	25dB
100	35dB
500	35dB
1000	32dB

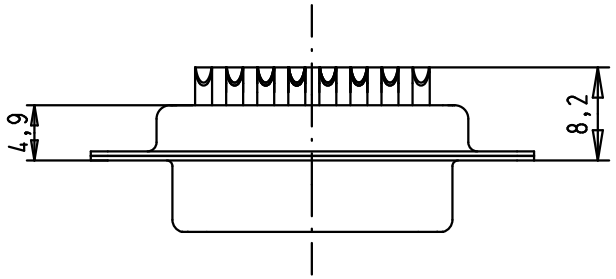

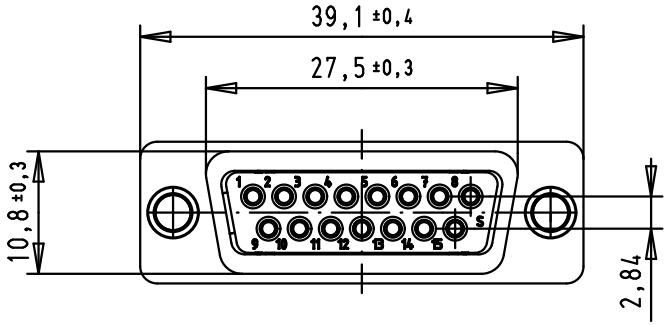

				Dat.	Name
			Detail.	8-JUL-02	CV
			Insp.	12/01/12	JB
36283	12/01/12	SD	Stand.		
33250	03/11/05	JMDR			
31058	8-JUL-02	CV			
Mod.	Dat.	Name			

All Dim. in mm
Orig. Size DIN A 4

D-Sub, female, straight 15 Poles, turned solder buckets, with holes

Ma?Mstab/ Scale 1.5:1

HARTING EURL
F-95972 Paris

TB 09642117240

Sub.

Blatt/ Page 1/1

Downloaded from Arrow.com.