Military/Aerospace/HI-REL

MIL-DTL-83731F Toggle Switches

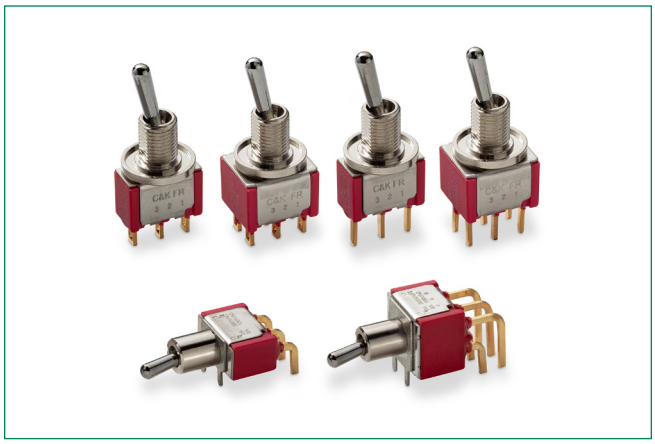

Description

The Military series toggle switches are high-quality, resilient switches qualified to the MIL-DTL-83731F specification. The switches are made of flame-retardant housing material with 50 µ inch selective gold contact plating and epoxy sealed terminals for process compatibility. With a long lifecycle of 10,000 cycles, military series switches successfully operate at both high and low temperatures, even in the harshest of environments.

Features & Benefits

- Qualified to MIL-DTL-83731F Cage code FBHV6
- 50 µ inch selective gold contact plating
- Epoxy sealed terminals for process compatibility
- Rated for logic level to 5 amp resistive loads and 2 amp inductive loads
- Flame retardant housing material
- RoHS compliant and compatible

Test Requirement	MIL-DTL-83731F/9, 10, 15, 16
Strength of Terminal	1 lb. – solder lug
Strength of Actuating Lever Pivot and Stop	10 lbs. & 8 lbs. throughout range
Strength of Mounting Means	15 lbs. in. torque on bushing
Dielectric (Sea Level) Indication	1000 VAC Group B, 750 VAC after electrical endurance. 500 µA max. leakage
Contact Voltage Drop	2.5 millivolt initial, 5.0 millivolt after mechanical endurance @ 2-6 VDC 0.1 amp
Temperature Rise	50˚ C rise max. @ rated resistive load after endurance test
Short Circuit	10 operations carry 100 amps resistive load @ lowest DC volts
Mechanical Life	20K operations at specified high and low temperatures
Electrical Endurance	10K operations at specified high and low temperatures
Overload	50 operations @ 150% of rated resistive load
Electrical Endurance at Sea Level	10K operations resistive load @ room temperature 10K operations inductive load @ room temperature 10K operations lamp load @ room temperature Performed on different test samples
Vibration	Method 204 of MIL-STD-202, test condition A .06 D. A. or 10 G's 10-500 Hz, 10 usec. max. chatter
Shock	Fuse-method 213 or MIL-STD-202, 10 usec. max. chatter
Salt Spray Test Upon Completion	48 hours – method 101 of MIL-STD-202, test condition B 10 operations resistive load (toggle sealed switches only)
Moisture Resistance Test Upon Completion	Method 106 of MIL-STD-202 100 VDC potential between current carrying parts and panel
Sand & Dust	Method 110 of MIL-STD-202, test condition B 6 hours @ 23 °C 2.5K operations mechanical life (toggle sealed switches only)
Explosion	Method 109 of MIL-STD-202, maximum rated DC inductive load (toggle sealed switches only)
Sealing	Toggle seal – 5 operations under 0.5 inches of H_2O above top of bushing
A.) Toggle Seal B.) Bushing Seal	(Toggle sealed switches only) (Panel sealed switches only)
Temperature Operation	Mechanical life, –25 to 71 °C
Life Low Cur. Level	No requirement
Fungus	No requirement
Intermediate Current	20K operations, 35/40 milliamps @ 5 VDC resistive load @ 71°C
Thermal Shock	Method 107 of MIL-STD-202 test condition A; 5 cycles @ –55 /+85 °C

© 2025 Littelfuse, Inc.
Specifications are subject to change without notice.
Revised: VL 07/31/25

Downloaded from Arrow.com.

Military/Aerospace/HI-REL

MIL-DTL-83731F Toggle Switches

Materials

Case	Diallyl phthalate (DAP) (UL 94 V-0)
Actuator	Brass, chrome plated
Bushing	Brass, nickel plated
Housing	Stainless, steel
Switch Support	Brass, tin plated
Terminals	Gold over nickel over copper alloy
Terminal Seal	Epoxy
Contacts	Gold over nickel over silver over brass
Panel Seal	Silicone rubber
Mounting Hardware	Two hexagon nut, brass with nickel plating; one lockwasher, steel with nickel plating; one locking ring, brass with nickel plating

Ratings - Current Ratings - High Level

Current Capacity in Amperes - Per Pole		
28V dc	115V ac, 400 Hz	125V ac
Lamp Load Hz		
1	1	1
Resistive Load		
5	5	5
Inductive Load		
2	2	2
Current Ratings - Logic Level		
0.5 Volt - Amp (VA) Max. @ 28 V Max. (AC or DC)		

Ordering Number

Complete part numbers for MIL-DTL-83731F toggle switches shown on following pages.

SPDT

No. Poles	Model No.	Switch Function POS. 1	Switch Function POS. 2	Switch Function POS. 3	Connected Terminals POS. 1	Connected Terminals POS. 2	Connected Terminals POS. 3	Schematic
SP	M83731/9-211	ON	OFF	ON	2-3	OPEN	2-1	SPDT 2 (COMM) 1 3
SP	M83731/9-231	ON	NONE	ON	2-3	OPEN	2-1	
	M83731/9-261			MOM.	2-3			
SP	M83731/9-271	MOM.	OFF	MOM.	2-3	OPEN	2-1	
	M83731/9-311	ON		MOM.				
SP	M83731/9-341	NONE	ON	MOM.	N/A	2-3	2-1	

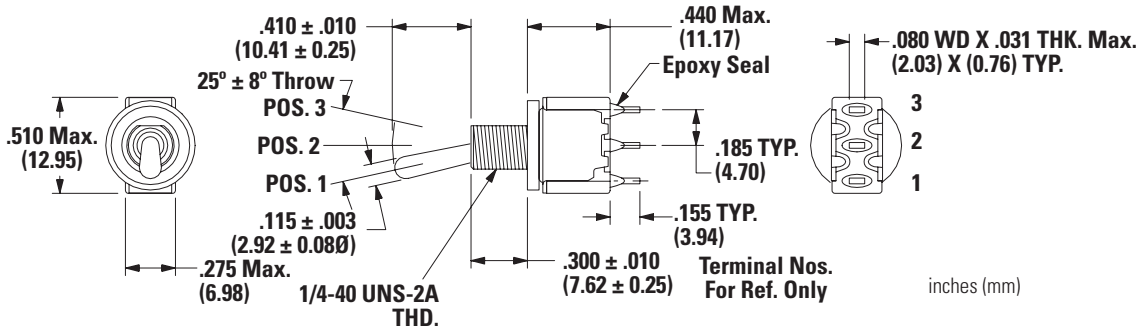

© 2025 Littelfuse, Inc.
Specifications are subject to change without notice.
Revised: VL 07/31/25

Downloaded from Arrow.com.

Military/Aerospace/HI-REL

MIL-DTL-83731F Toggle Switches

DPDT

No. Poles	Model No.	Switch Function POS. 1	Switch Function POS. 2	Switch Function POS. 3	Connected Terminals POS. 1	Connected Terminals POS. 2	Connected Terminals POS. 3	Schematic
DP	M83731/10-211	ON	OFF	ON	2-3, 5-6	OPEN	2-1,5-4	DPDT
	M83731/10-231	ON	NONE	ON	2-3, 5-6	OPEN	2-1,5-4	
	M83731/10-261	ON		MOM.	2-3, 5-6			
	M83731/10-271	MOM.	OFF	MOM.	2-3, 5-6	OPEN	2-1,5-4	
	M83731/10-311	ON		MOM.				
	M83731/10-321	ON	ON	ON	2-3, 5-6	2-3,5-4	2-1,5-4	
	M83731/10-331	ON		MOM.				
	M83731/10-341	NONE			N/A	2-3,5-6		
	M83731/10-351	MOM.			2-3,5-6	2-3,5-4		

Panel Mounting

inches (mm)

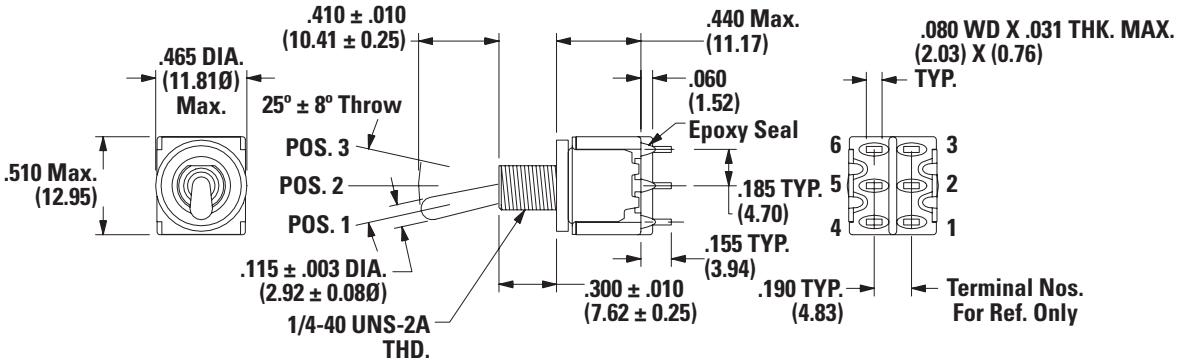

Without locking ring.

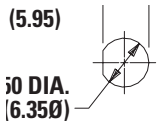

inches (mm)

With standard locking ring.

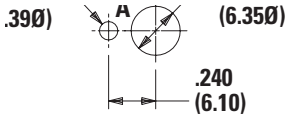

inches (mm)

© 2025 Littelfuse, Inc.
Specifications are subject to change without notice.
Revised: VL 07/31/25

Downloaded from Arrow.com.

Military/Aerospace/HI-REL

MIL-DTL-83731F Toggle Switches

SPDT

No. Poles	Model No.	Switch Function POS. 1	Switch Function POS. 2	Switch Function POS. 3	Connected Terminals POS. 1	Connected Terminals POS. 2	Connected Terminals POS. 3	Schematic
SP	M83731/9-212	ON	OFF	ON	2-3	OPEN	2-1	SPDT
	M83731/9-232	ON	NONE	ON	2-3	OPEN	2-1	
	M83731/9-262			MOM.				
	M83731/9-272	MOM.	OFF	MOM.	2-3	OPEN	2-1	
	M83731/9-312	ON						
	M83731/9-342	NONE	ON	MOM.	N/A	2-3	2-1	

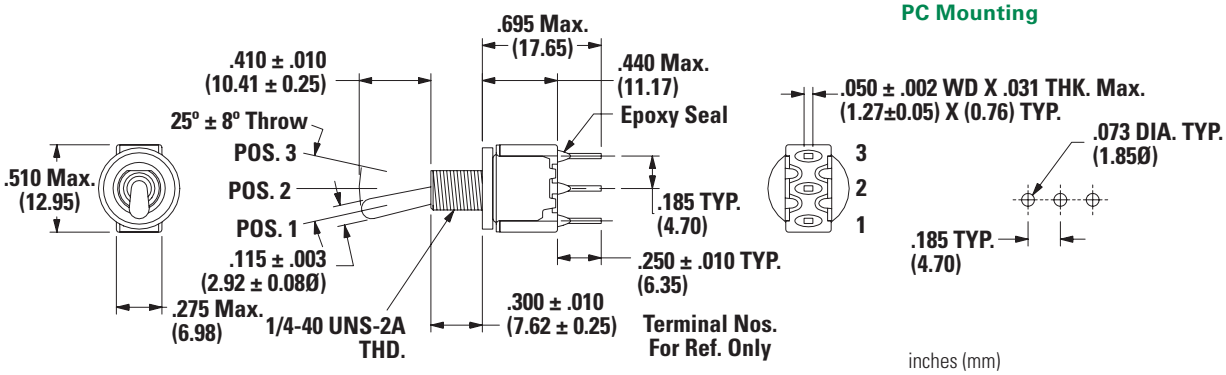

© 2025 Littelfuse, Inc.
Specifications are subject to change without notice.
Revised: VL 07/31/25

Downloaded from Arrow.com.

Military/Aerospace/HI-REL

MIL-DTL-83731F Toggle Switches

DPDT

No. Poles	Model No.	Switch Function POS. 1	Switch Function POS. 2	Switch Function POS. 3	Connected Terminals POS. 1	Connected Terminals POS. 2	Connected Terminals POS. 3	Schematic
DP	M83731/10-212	ON	OFF	ON	2-3, 5-6	OPEN	2-1,5-4	DPDT
	M83731/10-232	ON	NONE	ON	2-3, 5-6	OPEN	2-1,5-4	
	M83731/10-262			MOM.				
	M83731/10-272	MOM.	OFF	MOM.	2-3, 5-6	OPEN	2-1,5-4	
	M83731/10-312	ON						
	M83731/10-322	ON	ON	ON	2-3, 5-6	2-3,5-4	2-1,5-4	
	M83731/10-332	ON		MOM.				
	M83731/10-342	NONE			N/A	2-3,5-6		
	M83731/10-352	MOM.			2-3,5-6	2-3,5-4		

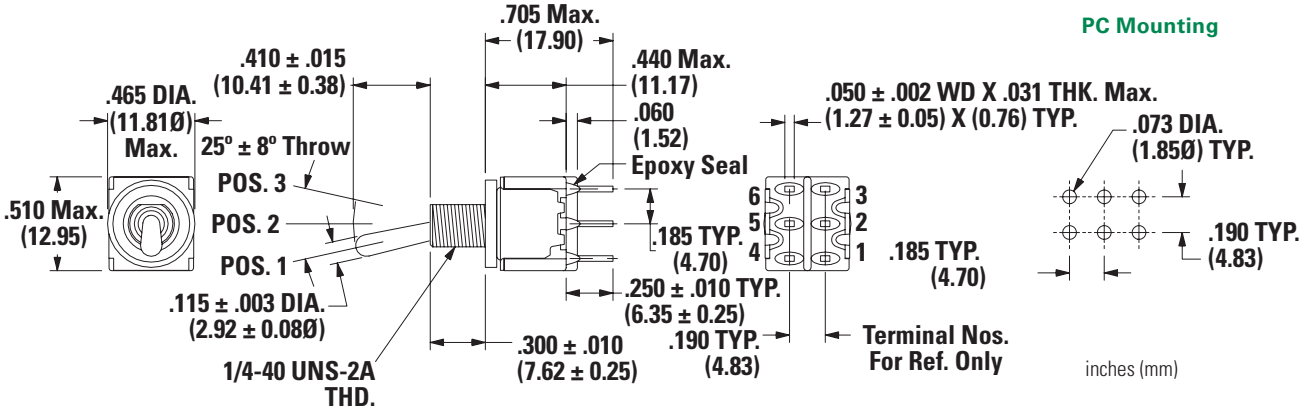

© 2025 Littelfuse, Inc.
Specifications are subject to change without notice.
Revised: VL 07/31/25

Downloaded from Arrow.com.

Military/Aerospace/HI-REL

MIL-DTL-83731F Toggle Switches

SPDT

No. Poles	Model No.	Switch Function POS. 1	Switch Function POS. 2	Switch Function POS. 3	Connected Terminals POS. 1	Connected Terminals POS. 2	Connected Terminals POS. 3	Schematic
SP	M83731/15-211	ON	OFF	ON	2-3	OPEN	2-1	SPDT 2 (COMM) 1 3
	M83731/15-231	ON	NONE	ON	2-3	OPEN	2-1	
	M83731/15-261			MOM.				
	M83731/15-271	MOM.	OFF	MOM.	2-3	OPEN	2-1	
	M83731/15-311	ON						
	M83731/15-341	NONE	ON	MOM.	N/A	2-3	2-1	

PC Mounting

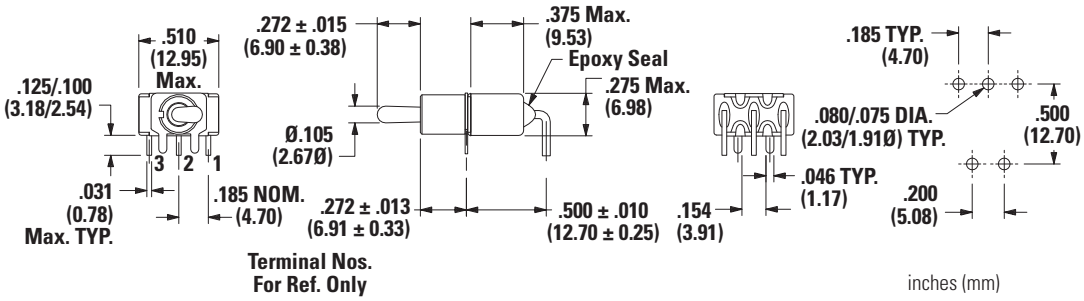

DPDT

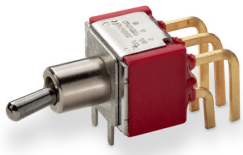

No. Poles	Model No.	Switch Function POS. 1	Switch Function POS. 2	Switch Function POS. 3	Connected Terminals POS. 1	Connected Terminals POS. 2	Connected Terminals POS. 3	Schematic
DP	M83731/16-211	ON	OFF	ON	2-3, 5-6	OPEN	2-1,5-4	DPDT 2 (COMM) 5 1 3 4 6
	M83731/16-231	ON	NONE	ON	2-3, 5-6	OPEN	2-1,5-4	
	M83731/16-261			MOM.				
	M83731/16-271	MOM.	OFF	MOM.	2-3, 5-6	OPEN	2-1,5-4	
	M83731/16-311	ON						
	M83731/16-321	ON	ON	ON	2-3, 5-6	2-3,5-4	2-1,5-4	
	M83731/16-331			MOM.				
	M83731/16-341	NONE			N/A	2-3,5-6		
	M83731/16-351	MOM.			2-3,5-6	2-3,5-4		

PC Mounting

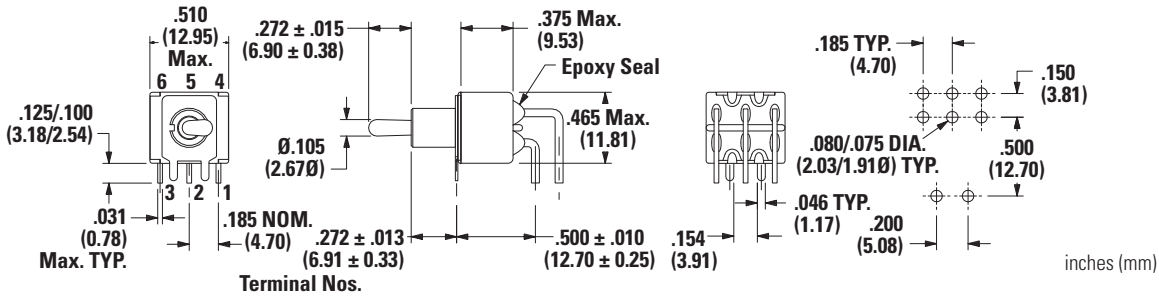

Disclaimer Notice - Information furnished is believed to be accurate and reliable. However, users should independently evaluate the suitability of and test each product selected for their own applications. Littelfuse products are not designed for, and may not be used in, all applications. Read complete Disclaimer Notice at http://www.littelfuse.com/disclaimer-electronics.

© 2025 Littelfuse, Inc.
Specifications are subject to change without notice.
Revised: VL 07/31/25

Downloaded from Arrow.com.