Type: **011626090** External dimensions: **160 x 260 x 91 mm** Weight: **2300 g**

| DIN rail length in mm | max. fitting length in mm | Earthing rail clamp | Mounting plate (thickness in mm) | External mounting brackets | External hinge* set | EMC version | Internal hinge* set | SWB / SBG / SBGL Corr.protection | Allen lid screws | Silicone lid seal | Sealable lid screws in steel | Turn bolt fastener on request | Quick lock |
|---|---|---|---|---|---|---|---|---|---|---|---|---|---|
| TS 35 | | | | | | | | | | | | | |
| 245 | 220 | 16 | 1.5 | • | • | • | • | • | • | • | • | • | • |

Maximum number of cable glands to **DIN 50262***

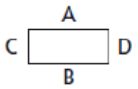


| M | Corner dim. | Side A/B | Side C/D | PG | Corner dim. | Side A/B | Side C/D |
|---|---|---|---|---|---|---|---|
| 12 | 17.25 | 50 | 16 | 7 | 17.25 | 50 | 16 |
| 16 | 25.30 | 24 | 8 | 9 | 21.85 | 30 | 11 |
| 20 | 27.60 | 17 | 6 | 11 | 25.30 | 23 | 6 |
| 25 | 37.95 | 10 | 3 | 13.5 | 27.60 | 17 | 6 |
| 32 | 48.30 | 5 | 2 | 16 | 31.05 | 14 | 5 |
| 40 | 60.95 | 3 | 1 | 21 | 37.95 | 9 | 3 |
| 50 | 69.00 | 3 | | 29 | 48.30 | 5 | 2 |
| 63 | 74.75 | | | 36 | 60.95 | 3 | 1 |
| | | | | 42 | 69.00 | 3 | |
| | | | | 48 | 74.75 | | |
| | | | | | | | |

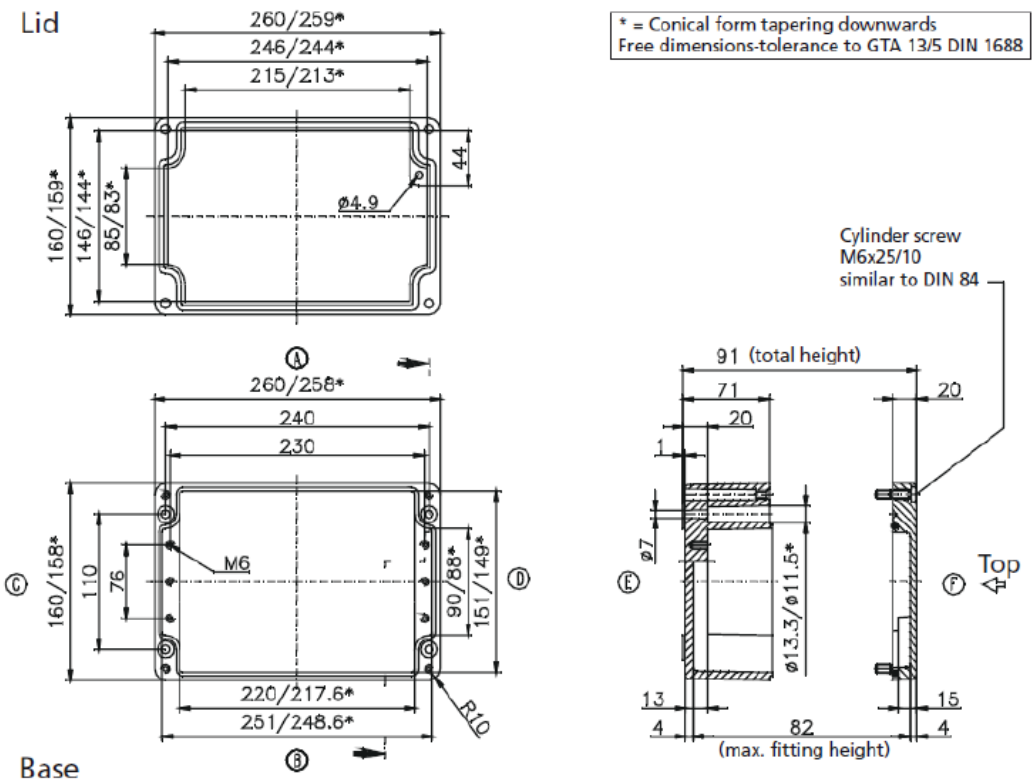


| | | |
|---|---|---|
| DATE 17 MAY 2017 | 7330 Executive Way<br>Frederick, MD 21704<br>(301) 696-9411 voice<br>(301) 696-9494 fax | ROSE |
| SHEET 1 | | |
| DESCRIPTION | ENCLOSURE, STANDARD, ALUMINUM<br>160 X 260 X 91MM, RAL 7001 | |
| SIZE A | DRAWING NUMBER **011626090** | REV - |

Downloaded from Arrow.com.