Axial Leads/SpinGuard®

GENERAL DESCRIPTION

AVX SA Series
Conformally Coated Axial Leaded MLC

Temperature Coefficients: C0G (NP0), X7R, X5R, Z5U
10, 50, 100, 200 Volts

Case Material: Epoxy (Flame Retardant to UL Bulletin 492, Par. 280)

Lead Material: Solderable

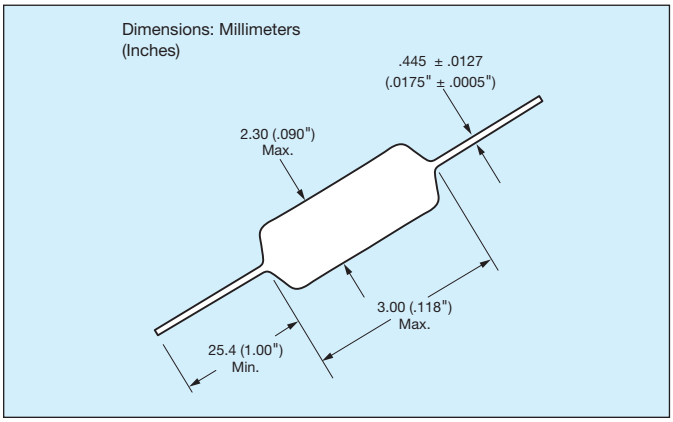

HOW TO ORDER

SA10 — **Conformal Axial Size**
SA05
SA10
SA11
SA20
SA30
SA40

5 — **Voltage**
Z = 10V
5 = 50V
1 = 100V
2 = 200V

E — **Dielectric**
A = C0G (NP0)
C = X7R
D = X5R
E = Z5U

104 — **Capacitance**
First two digits are the significant figures of capacitance. Third digit indicates the additional number of zeros. For example, order 100,000 pF as 104. (For values below 10pF use "R" in place of decimal point, e.g., 1R4 = 1.4pF.)

Z — **Capacitance Tolerance**
C0G (NP0):
C = ±.25pF
D = ±.5pF
F = ±1%
G = ±2%
J = ±5%
K = ±10%

X7R:
J = ±5%
K = ±10%
M = ±20%

X5R:
K = ±10%
M = ±20%

Z5U:
M = ±20%
Z = +80%
-20%

A — **Failure Rate**
A = Not Applicable

R — **Leads**
Standard (Solderable)
R = RoHS Compliant
A = Standard Solderable
(Also RoHS Compliant)

RoHS COMPLIANT

Please select correct termination style.

MARKING (EXAMPLE)

SpinGuard marking includes full date code/lot code identification. A first in the industry, this format provides complete traceability to all manufacturing processes involving the basic chip and final assembly. Total Shipment traceability is also provided.

SA05

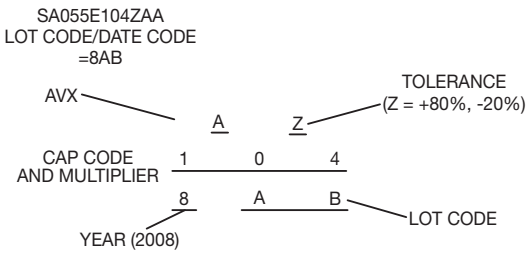

SA10, 11, 20, 30, 40

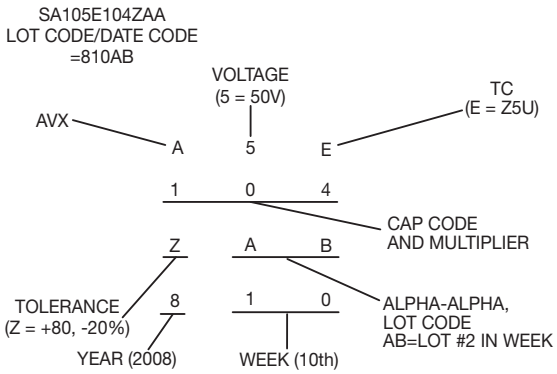

PACKAGING REQUIREMENTS

A = Standard Reels (see Page 49)
B = 1000 piece reels (distributors only, tight tolerance only)
C = Ammo Pack (see Page 49)
D thru J = See Special Lead Configurations (Page 41)
M = 26mm tape and reel
N = 26mm ammo pack
R = RoHS, Standard reels (See page 49)

Downloaded from Arrow.com.

Axial Leads/SpinGuard®

C0G (NP0) Dielectric

SIZE AND CAPACITANCE SPECIFICATIONS

Dimensions: Millimeters (Inches)

	AVX Style	SA05		SA10			SA11		SA20		SA30		SA40	
	Length (L)	3.00 (.118")		4.32 (.170")			4.32 (.170")		6.60 (.260")		7.37 (.290")		10.16 (.400")	
	Diameter (D)	2.30 (.090")		2.54 (.100")			3.05 (.120")		2.54 (.100")		3.81 (.150")		3.81 (.150")	
	Lead Diameter	.445 (.0175")		.445 (.0175")			.445 (.0175")		.445 (.0175")		.445 (.0175")		.445 (.0175")	
	Lead Length	25.4 (1.00")		25.4 (1.00")			25.4 (1.00")		25.4 (1.00")		25.4 (1.00")		25.4 (1.00")	
Cap. in pF	Typical AVX Part Nos.	WVDC 200	100	WVDC 200	100	50	WVDC 100	50	WVDC 100	50	WVDC 100	50	WVDC 100	50
1.0* ↓ 9.1*	SA102A1R0DAR ↓ SA102A9R1DAR													
10	SA102A100JAR													
12	SA102A120JAR													
15	SA102A150JAR													
18	SA102A180JAR													
22	SA102A220JAR													
27	SA102A270JAR													
33	SA102A330JAR													
39	SA102A390JAR													
47	SA102A470JAR													
56	SA102A560JAR													
68	SA102A680JAR													
82	SA102A820JAR													
100	**SA102A101JAR**													
120	SA102A121JAR													
150	SA101A151JAR													
180	SA101A181JAR													
220	SA101A221JAR													
270	SA101A271JAR													
330	SA101A331JAR													
390	SA101A391JAR													
470	SA101A471JAR													
560	SA101A561JAR													
680	SA101A681JAR													
820	SA101A821JAR													
1000	**SA105A102JAR**													
1200	SA201A122JAR													
1500	SA201A152JAR													
1800	SA205A182JAR													
2200	**SA301A222JAR**													
2700	SA301A272JAR													
3300	SA301A332JAR													
3900	SA301A392JAR													
4700	**SA305A472JAR**													
5600	SA401A562JAR													
6800	SA401A682JAR													
8200	SA405A822JAR													
10,000	**SA405A103JAR**													
12,000	SA405A123JAR													

For other tolerances see Part No. Codes
For other voltages see Part No. Codes
AVX Style

= Industry preferred values

*"C&D" Tolerance Only

Downloaded from Arrow.com.

Axial Leads/SpinGuard®

X7R Dielectric

SIZE AND CAPACITANCE SPECIFICATIONS

Dimensions: Millimeters (Inches)

	AVX Style	SA05			SA10			SA11		SA20		SA30		SA40	
	Length (L)	3.00 (.118")			4.32 (.170")			4.32 (.170")		6.60 (.260")		7.37 (.290")		10.16 (.400")	
	Diameter (D)	2.30 (.090")			2.54 (.100")			3.05 (.120")		2.54 (.100")		3.81 (.150")		3.81 (.150")	
	Lead Diameter	.445 (.0175")			.445 (.0175")			.445 (.0175")		.445 (.0175")		.445 (.0175")		.445 (.0175")	
	Lead Length	25.4 (1.00")			25.4 (1.00")			25.4 (1.00")		25.4 (1.00")		25.4 (1.00")		25.4 (1.00")	
Cap. in pF	**Typical AVX Part Nos.**	**WVDC 200**	**100**	**50**	**WVDC 200**	**100**	**50**	**WVDC 100**	**50**	**WVDC 100**	**50**	**WVDC 100**	**50**	**WVDC 100**	**50**
220	SA102C221KAR														
270	SA102C271KAR														
330	SA102C331KAR														
390	SA102C391KAR														
470	SA102C471KAR														
560	SA101C561KAR														
680	SA101C681KAR														
820	SA101C821KAR														
1000	SA101C102KAR														
1200	SA101C122KAR														
1500	SA101C152KAR														
1800	SA101C182KAR														
2200	SA101C222KAR														
2700	SA101C272KAR														
3300	SA101C332KAR														
3900	SA101C392KAR														
4700	SA101C472KAR														
5600	SA101C562KAR														
6800	SA101C682KAR														
8200	SA105C822KAR														
10,000	**SA105C103KAR**														
12,000	SA105C123KAR														
15,000	SA105C153KAR														
18,000	SA105C183KAR														
22,000	SA105C223KAR														
27,000	SA105C273KAR														
33,000	SA105C333KAR														
39,000	SA105C393KAR														
47,000	**SA105C473KAR**														
56,000	SA115C563KAR														
68,000	SA115C683KAR														
82,000	SA115C823KAR														
100,000	**SA115C104KAR**														
120,000	SA305C124KAR														
150,000	SA305C154KAR														
180,000	SA305C184KAR														
220,000	**SA305C224KAR**														
270,000	SA305C274KAR														
330,000	SA305C334KAR														
470,000	SA405C474KAR														
1,000,000	SA305C105KAR														

For other tolerances see Part No. Codes
For other voltages see Part No. Codes
AVX Style

= **Industry preferred values**

Downloaded from Arrow.com.

Axial Leads/SpinGuard®

Z5U Dielectric

SIZE AND CAPACITANCE SPECIFICATIONS

Dimensions: Millimeters (Inches)

	AVX Style	SA05	SA10		SA11		SA20		SA30		SA40	
	Length (L)	3.00 (.118")	4.32 (.170")		4.32 (.170")		6.60 (.260")		7.37 (.290")		10.16 (.400")	
	Diameter (D)	2.30 (.090")	2.54 (.100")		3.05 (.120")		2.54 (.100")		3.81 (.150")		3.81 (.150")	
	Lead Diameter	.445 (.0175")	.445 (.0175")		.445 (.0175")		.445 (.0175")		.445 (.0175")		.445 (.0175")	
	Lead Length	25.4 (1.00")	25.4 (1.00")		25.4 (1.00")		25.4 (1.00")		25.4 (1.00")		25.4 (1.00")	
Cap. in pF	**Typical AVX Part Nos.**	**WVDC 50**	**WVDC 100**	**50**	**WVDC 100**	**50**	**WVDC 100**	**50**	**WVDC 100**	**50**	**WVDC 100**	**50**
10,000	**SA105E103ZAR**			■								
15,000	SA105E153ZAR											
22,000	SA105E223ZAR											
33,000	SA105E333ZAR											
47,000	SA105E473ZAR											
68,000	SA105E683ZAR											
***100,000**	**SA105E104ZAR**			■								
150,000	SA105E154ZAR											
220,000	**SA105E224ZAR**			■								
330,000	**SA115E334ZAR**					■						
470,000	**SA305E474ZAR**									■		
680,000	SA305E684ZAR											
820,000	SA305E824ZAR											
1,000,000	**SA305E105ZAR**									■		

For other tolerances see Part No. Codes
For other voltages see Part No. Codes
AVX Style

■ = **Industry preferred values**

***Preferred Industry Decoupling Capacitor —** Insertable on .300" centers.
SA105E104ZAA

Downloaded from Arrow.com.

SIZE AND CAPACITANCE SPECIFICATIONS

Dimensions: Millimeters (Inches)

	AVX Style	SA10
	Length (L)	4.32 (.170")
	Diameter (D)	2.54 (.100")
	Lead Diameter	.445 (.0175")
	Lead Length	25.4 (1.00")
Cap. in µF	**Typical AVX Part Nos.**	**WVDC 10**
1.8	SA10ZD185KAR	
2.7	SA10ZD275KAR	
3.3	SA10ZD335KAR	
4.7	SA10ZD475KAR	

For other tolerances see Part No. Codes
For other voltages see Part No. Codes
AVX Style

= **Industry preferred values**

Downloaded from Arrow.com.

Axial Leads/SpinGuard®/AA Series

Automotive

GENERAL DESCRIPTION

AVX AA Series

Electrical Characteristics: AA101C103K4R

Capacitance @ 25ºC, 1kHz, 1Vrms	0.0100µF
Capacitance Tolerance	±10 %
Dissipation Factor @ 25ºC	2.5% Max
Rated Voltage	100Vdc
Dielectric Withstand Voltage	250Vdc
Insulation Resistance @ 25ºC @ Rated Voltage	100000 Mohms

Temperature Characteristics:

X7R (-55 to + 125ºC ± 15% @ 0Vdc)

Lead Material:

RoHS Compliant	100% Tin

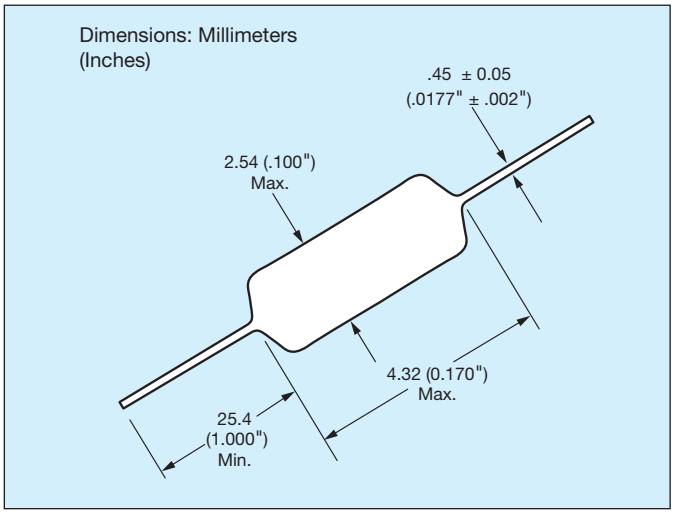

HOW TO ORDER

AA10	1	C	103	K	4	R
Component Size	**Voltage Rating**	**Temperature Characteristic Code**	**Capacitance Code**	**Capacitance Tolerance Code**	**Failure Rate** 4 = Automotive	**RoHS Compliant**

RoHS COMPLIANT

MARKING (EXAMPLE)

SpinGuard marking includes full date code/lot code identification. A first in the industry, this format provides complete traceability to all manufacturing processes involving the basic chip and final assembly. Total Shipment traceability is also provided.

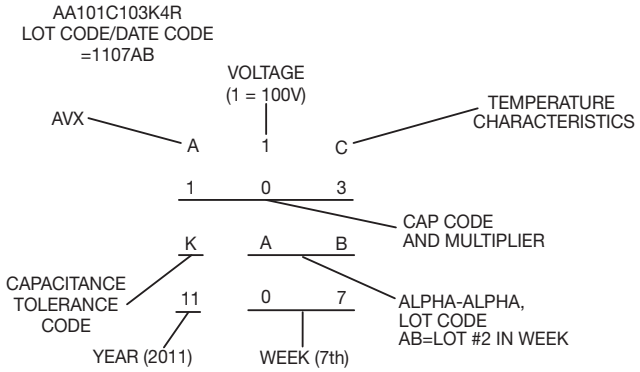

PACKAGING REQUIREMENTS

Tape and Reel Ø 14": 7500 pieces

Downloaded from Arrow.com.

SIZE AND CAPACITANCE SPECIFICATIONS

Dimensions: Millimeters (Inches)

	AVX Style	AA10			AA30	
	Length (L)	4.32 (.170")			7.37 (.290")	
	Diameter (D)	2.54 (.100")			3.81 (.150")	
	Lead Diameter	.445 (.0175")			.445 (.0175")	
	Lead Length	25.4 (1.00")			25.4 (1.00")	
Cap. in * pF	Typical AVX Part Nos.	WVDC 200	WVDC 100	WVDC 50	WVDC 100	WVDC 50
100	AA___A101K4R					
120	AA___A121K4R					
150	AA___A151K4R					
180	AA___A181K4R					
220	AA___A221K4R					
270	AA___A271K4R					
330	AA___A331K4R					
390	AA___A391K4R					
470	AA___A471K4R					
560	AA___A561K4R					
680	AA___A681K4R					
820	AA___A821K4R					
1,000	AA___A102K4R					
1,200	AA___A122K4R					
1,500	AA___A152K4R					
1,800	AA___A182K4R					
2,200	AA___A222K4R					
2,700	AA___A272K4R					
3,300	AA___A332K4R					
3,900	AA___A392K4R					
4,700	AA___A472K4R					
5,600	AA___A562K4R					
6,800	AA___A682K4R					
8,200	AA___A822K4R					
10,000	AA___A103K4R					

For other voltage and tolerances contact factory.

*Other capacitance values available upon special request.

Downloaded from Arrow.com.

SIZE AND CAPACITANCE SPECIFICATIONS

Dimensions: Millimeters (Inches)

	AVX Style	AA10		AA30	
	Length (L)	4.32 (.170")		7.37 (.290")	
	Diameter (D)	2.54 (.100")		3.81 (.150")	
	Lead Diameter	.445 (.0175")		.445 (.0175")	
	Lead Length	25.4 (1.00")		25.4 (1.00")	
Cap. in * pF	Typical AVX Part Nos.	WVDC 100	50	WVDC 100	50
220	AA___C221KAR				
270	AA___C271KAR				
330	AA___C331KAR				
390	AA___C391KAR				
470	AA___C471KAR				
560	AA___C561KAR				
680	AA___C681KAR				
820	AA___C821KAR				
1,000	AA___C102KAR				
1,200	AA___C122KAR				
1,500	AA___C152KAR				
1,800	AA___C182KAR				
2,200	AA___C222KAR				
2,700	AA___C272KAR				
3,300	AA___C332KAR				
3,900	AA___C392KAR				
,700	AA___C472KAR				
5,600	AA___C562KAR				
6,800	AA___C682KAR				
8,200	AA___C822KAR				
10,000	AA___C103KAR				
12,000	AA___C123KAR				
15,000	AA___C153KAR				
18,000	AA___C183KAR				
22,000	AA___C223KAR				
27,000	AA___C273KAR				
33,000	AA___C333KAR				
39,000	AA___C393KAR				
47,000	AA___C473KAR				
56,000	AA___C563KAR				
68,000	AA___C683KAR				
82,000	AA___C823KAR				
100,000	AA___C104KAR				

For other voltage and tolerances contact factory.

*Other capacitance values available upon special request.

Downloaded from Arrow.com.

Axial Leads/Ceralam®

GENERAL DESCRIPTION

AVX MA Series

Molded Axial Leaded MLC

Temperature Coefficient: C0G (NP0), X7R, Z5U
50V, 100V and 200V

Case Material: Molded Epoxy

Lead Material: Solderable

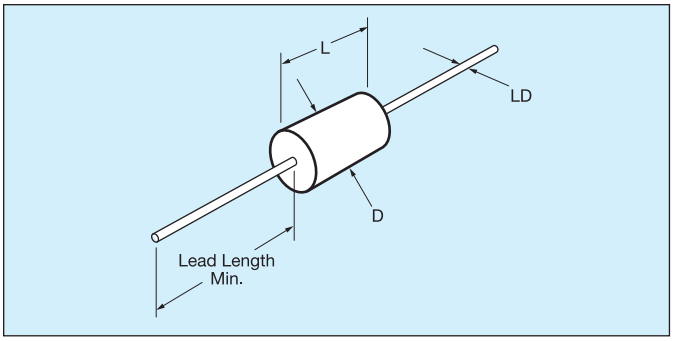

HOW TO ORDER

MA10	5	E	104	Z	A	A
Molded Axial Size	**Voltage**	**Dielectric**	**Capacitance**	**Capacitance Tolerance**	**Failure Rate**	**Leads**
MA10 MA20 MA30 MA40 MA50 MA60	5 = 50V 1 = 100V 2 = 200V	A = C0G (NP0) C = X7R E = Z5U	First two digits are the significant figures of capacitance. Third digit indicates the additional number of zeros. For example, order 100,000 pF as 104. (For values below 10pF use "R" in place of decimal point, e.g., 1R4 = 1.4pF.)	C0G (NP0): F = ±1% J = ±5% K = ±10% M = ±20% D = ±0.5pF <10pF only X7R: J = ±5% K = ±10% M = ±20% Z5U: M = ±20% Z = +80% -20%	A = Not Applicable	A = Standard

Not RoHS Compliant

‡ C tolerance available C0G (NP0) from 1.0 to 9.1 pF only. Minimum tolerance for values 10 pF - 100 pF is D or F whichever is greater.

MARKING (EXAMPLE)

Line 1, A (for AVX), 5 = 50 Volts (V is optional),
E = TC Line 2, 104Z = Capacitance Code

Line 3, Tolerance, 2 digit Lot Code
Date Code: 8 = 2008
10 = Week

Four Digit Date Code Optional

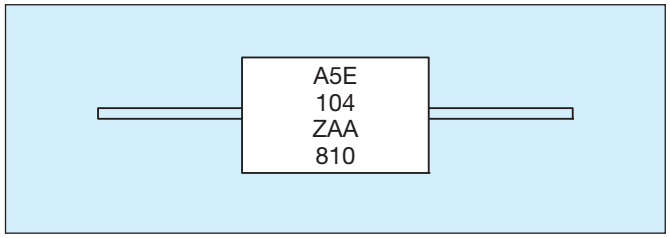

MILITARY CROSS REFERENCE AND DIMENSIONS GUIDE

Per MIL-Spec				Case Size		
AVX Style	**MIL-C-11015**	**MIL-PRF-39014**	**MIL-PRF-20**	**Length (L)**	**Diameter (D)**	**Lead Diameter (LD)**
MA10	CK12	CKR11	CCR75/CC75	4.07 ± .25 (.160" ± .010")	2.29 ± .25 (.090" ± .010")	.48 ± .05 (.019" ± .002")
MA20	CK13	CKR12	CCR76/CC76	6.35 ± .25 (.250" ± .010")	2.29 ± .25 (.090" ± .010")	.48 ± .05 (.019" ± .002")
MA40	CK14	CKR14	CCR77/CC77	9.91 ± .25 (.390" ± .010")	3.56 ± .25 (.140" ± .010")	.63 ± .05 (.025" ± .002")
MA50	CK15	CKR15	CCR78/CC78	12.7 ± .51 (.500" ± .020")	6.35 ± .38 (.250" ± .015")	.63 ± .05 (.025" ± .002")
MA60	CK16	CKR16	CCR79/CC79	17.53 ± .51 (.690" ± .020")	8.89 ± .51 (.350" ± .015")	.63 ± .05 (.025" ± .002")

For Military/Established Reliability Molded/Axial Lead see MIL-C-11015, MIL-PRF-39014, MIL-PRF-20 Section.

Dimensions: Millimeters (Inches)

Downloaded from Arrow.com.

Axial Leads/Ceralam®

C0G (NP0) Dielectric

SIZE AND CAPACITANCE SPECIFICATIONS

Dimensions: Millimeters (Inches)

AVX Style	MA10	MA20	MA30	MA40	MA50	MA60
Length	4.07 ± .25 (.160" ± .010")	6.35 ± .25 (.250" ± .010")	6.09 ± .25 (.240" ± .010")	9.91 ± .25 (.390" ± .010")	12.7 ± .51 (.500" ± .020")	17.53 ± .51 (.690" ± .020")
Diameter	2.29 ± .25 (.090" ± .010")	2.29 ± .25 (.090" ± .010")	3.30 ± .25 (.130" ± .010")	3.56 ± .25 (.140" ± .010")	6.35 ± .38 (.250" ± .015")	8.89 ± .51 (.350" ± .015")
Lead Diameter	.48 ± .05 (.019" ± .002")	.48 ± .05 (.019" ± .002")	.48 ± .05 (.019" ± .002")	.63 ± .05 (.025" ± .002")	.63 ± .05 (.025" ± .002")	.63 ± .05 (.025" ± .002")
Lead Length	25.4 (1.00")	25.4 (1.00")	25.4 (1.00")	25.4 (1.00")	25.4 (1.00")	25.4 (1.00")

Cap. in pF	Typical AVX Part Nos.	MA10 WVDC 200	MA10 WVDC 100	MA10 WVDC 50	MA20 WVDC 200	MA20 WVDC 100	MA20 WVDC 50	MA30 WVDC 200	MA30 WVDC 100	MA30 WVDC 50	MA40 WVDC 200	MA40 WVDC 100	MA40 WVDC 50	MA50 WVDC 200	MA50 WVDC 100	MA50 WVDC 50	MA60 WVDC 200	MA60 WVDC 100	MA60 WVDC 50
1.0 to 9.1	MA-----5A1R0DAA MA-----5A9R1DAA	■	■	■															
10 12 15	MA----5A100KAA MA----5A120KAA MA----5A150KAA	■	■	■															
18 22 27	MA----5A180KAA MA----5A220KAA MA----5A270KAA	■	■	■															
33 39 47	MA-----5A330KAA MA-----5A390KAA MA-----5A470KAA	■	■	■															
56 68 82	MA----5A560KAA MA----5A680KAA MA----5A820KAA	■	■	■															
100 120 150	MA----5A101KAA MA----5A121KAA MA----5A151KAA	■	■	■	■	■	■												
180 220 270	MA----5A181KAA MA----5A221KAA MA----5A271KAA	■	■	■	■	■	■	■	■	■	■	■	■						
330 390 470	MA----5A331KAA MA----5A391KAA MA----5A471KAA		■	■		■	■	■	■	■	■	■	■						
560 680 820	MA----5A561KAA MA----5A681KAA MA----5A821KAA		■	■		■	■	■	■	■	■	■	■						
1000 1200 1500	MA----5A102KAA MA----5A122KAA MA----5A152KAA			■		■	■	■	■	■	■	■	■	■	■	■			
1800 2200 2700	MA----5A182KAA MA----5A222KAA MA----5A272KAA						■		■	■	■	■	■	■	■	■			
3300 3900 4700	MA----5A332KAA MA----5A392KAA MA----5A472KAA								■	■		■	■	■	■	■	■	■	■
5600 6800 8200	MA----5A562KAA MA----5A682KAA MA----5A822KAA									■		■	■	■	■	■	■	■	■
10,000 12,000 15,000	MA----5A103KAA MA----5A123KAA MA----5A153KAA												■		■	■	■	■	■
18,000 22,000 27,000	MA----5A183KAA MA----5A223KAA MA----5A273KAA														■	■	■	■	■
33,000 39,000 47,000	MA----5A333KAA MA----5A393KAA MA----5A473KAA														■	■	■	■	■
56,000 68,000 82,000	MA----5A563KAA MA----5A683KAA MA----5A823KAA															■		■	■
100,000 120,000 150,000	MA----5A104KAA MA----5A124KAA MA----5A154KAA																	■	■

For other tolerances see Part No. Codes
For other voltages see Part No. Codes.
AVX Style

Downloaded from Arrow.com.

Axial Leads/Ceralam®

X7R Dielectric

SIZE AND CAPACITANCE SPECIFICATIONS

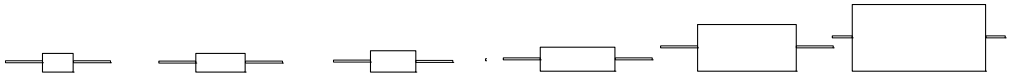

Dimensions: Millimeters (Inches)

	AVX Style	MA10			MA20			MA30			MA40			MA50			MA60		
	Length	4.07 ± .25 (.160" ± .010")			6.35 ± .25 (.250" ± .010")			6.09 ± .25 (.240" ± .010")			9.91 ± .25 (.390" ± .010")			12.7 ± .51 (.500" ± .020")			17.53 ± .51 (.690" ± .020")		
	Diameter	2.29 ± .25 (.090" ± .010")			2.29 ± .25 (.090" ± .010")			3.30 ± .25 (.130" ± .010")			3.56 ± .25 (.140" ± .010")			6.35 ± .38 (.250" ± .015")			8.89 ± .51 (.350" ± .015")		
	Lead Diameter	.48 ± .05 (.019" ± .002")			.48 ± .05 (.019" ± .002")			.48 ± .05 (.019" ± .002")			.63 ± .05 (.025" ± .002")			.63 ± .05 (.025" ± .002")			.63 ± .05 (.025" ± .002")		
	Lead Length	25.4 (1.00")			25.4 (1.00")			25.4 (1.00")			25.4 (1.00")			25.4 (1.00")			25.4 (1.00")		
Cap. in pF	Typical AVX Part Nos.	WVDC			WVDC			WVDC			WVDC			WVDC			WVDC		
		200	100	50	200	100	50	200	100	50	200	100	50	200	100	50	200	100	50
220	MA____5C221KAA																		
270	MA____5C271KAA																		
330	MA____5C331KAA																		
390	MA____5C391KAA																		
470	MA____5C471KAA																		
560	MA____5C561KAA																		
680	MA____5C681KAA																		
820	MA____5C821KAA																		
1000	MA____5C102KAA																		
1200	MA____5C122KAA																		
1500	MA____5C152KAA																		
1800	MA____5C182KAA																		
2200	MA____5C222KAA																		
2700	MA____5C272KAA																		
3300	MA____5C332KAA																		
3900	MA____5C392KAA																		
4700	MA____5C472KAA																		
5600	MA____5C562KAA																		
6800	MA____5C682KAA																		
8200	MA____5C822KAA																		
10,000	MA____5C103KAA																		
12,000	MA____5C123KAA																		
15,000	MA____5C153KAA																		
18,000	MA____5C183KAA																		
22,000	MA____5C223KAA																		
27,000	MA____5C273KAA																		
33,000	MA____5C333KAA																		
39,000	MA____5C393KAA																		
47,000	MA____5C473KAA																		
56,000	MA____5C563KAA																		
68,000	MA____5C683KAA																		
82,000	MA____5C823KAA																		
100,000	MA____5C104KAA																		
120,000	MA____5C124KAA																		
150,000	MA____5C154KAA																		
180,000	MA____5C184KAA																		
220,000	MA____5C224KAA																		
270,000	MA____5C274KAA																		
330,000	MA____5C334KAA																		
390,000	MA____5C394KAA																		
470,000	MA____5C474KAA																		
560,000	MA____5C564KAA																		
680,000	MA____5C684KAA																		
820,000	MA____5C824KAA																		
1.0 µF	MA____5C105KAA																		
1.2 µF	MA____5C125KAA																		
1.5 µF	MA____5C155KAA																		
1.8 µF	MA____5C185KAA																		
2.2 µF	MA____5C225KAA																		
2.7 µF	MA____5C275KAA																		
3.3 µF	MA____5C335KAA																		
3.9 µF	MA____5C395KAA																		

For other tolerances see Part No. Codes
For other voltages see Part No. Codes.
AVX Style

Downloaded from Arrow.com.

Axial Leads/Ceralam®

Z5U Dielectric

SIZE AND CAPACITANCE SPECIFICATIONS

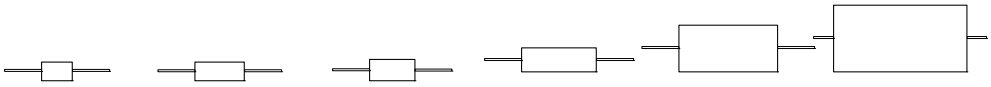

Dimensions: Millimeters (Inches)

AVX Style	MA10	MA20	MA30	MA40	MA50	MA60
Length	4.07 ± .25 (.160" ± .010")	6.35 ± .25 (.250" ± .010")	6.09 ± .25 (.240" ± .010")	9.91 ± .25 (.390" ± .010")	12.7 ± .51 (.500" ± .020")	17.53 ± .51 (.690" ± .020")
Diameter	2.29 ± .25 (.090" ± .010")	2.29 ± .25 (.090" ± .010")	3.30 ± .25 (.130" ± .010")	3.56 ± .25 (.140" ± .010")	6.35 ± .38 (.250" ± .015")	8.89 ± .51 (.350" ± .015")
Lead Diameter	.48 ± .05 (.019" ± .002")	.48 ± .05 (.019" ± .002")	.48 ± .05 (.019" ± .002")	.63 ± .05 (.025" ± .002")	.63 ± .05 (.025" ± .002")	.63 ± .05 (.025" ± .002")
Lead Length	25.4 (1.00")	25.4 (1.00")	25.4 (1.00")	25.4 (1.00")	25.4 (1.00")	25.4 (1.00")

Cap. in pF	Typical AVX Part Nos.	MA10 WVDC 200	MA10 WVDC 100	MA10 WVDC 50	MA20 WVDC 200	MA20 WVDC 100	MA20 WVDC 50	MA30 WVDC 200	MA30 WVDC 100	MA30 WVDC 50	MA40 WVDC 200	MA40 WVDC 100	MA40 WVDC 50	MA50 WVDC 200	MA50 WVDC 100	MA50 WVDC 50	MA60 WVDC 200	MA60 WVDC 100	MA60 WVDC 50
1000	MA___5E102ZAA	■	■	■															
1200	MA___5E122ZAA	■	■	■															
1500	MA___5E152ZAA	■	■	■															
1800	MA___5E182ZAA	■	■	■															
2200	MA___5E222ZAA	■	■	■															
2700	MA___5E272ZAA	■	■	■															
3300	MA___5E332ZAA	■	■	■	■	■	■												
3900	MA___5E392ZAA	■	■	■	■	■	■												
4700	MA___5E472ZAA	■	■	■	■	■	■												
5600	MA___5E562ZAA		■	■	■	■	■	■	■	■									
6800	MA___5E682ZAA		■	■	■	■	■	■	■	■									
8200	MA___5E822ZAA		■	■	■	■	■	■	■	■									
10,000	MA___5E103ZAA		■	■	■	■	■	■	■	■	■	■	■						
12,000	MA___5E123ZAA		■	■		■	■	■	■	■	■	■	■						
15,000	MA___5E153ZAA		■	■		■	■	■	■	■	■	■	■						
18,000	MA___5E183ZAA		■	■		■	■	■	■	■	■	■	■						
22,000	MA___5E223ZAA			■		■	■	■	■	■	■	■	■						
27,000	MA___5E273ZAA			■		■	■	■	■	■	■	■	■						
33,000	MA___5E333ZAA			■		■	■		■	■	■	■	■	■	■	■			
39,000	MA___5E393ZAA			■		■	■		■	■	■	■	■	■	■	■			
47,000	MA___5E473ZAA			■		■	■		■	■	■	■	■	■	■	■			
56,000	MA___5E563ZAA			■			■		■	■	■	■	■	■	■	■			
68,000	MA___5E683ZAA			■			■		■	■		■	■	■	■	■			
82,000	MA___5E823ZAA			■			■		■	■		■	■	■	■	■			
100,000	MA___5E104ZAA						■			■		■	■	■	■	■	■	■	■
120,000	MA___5E124ZAA						■			■		■	■	■	■	■	■	■	■
150,000	MA___5E154ZAA									■		■	■	■	■	■	■	■	■
180,000	MA___5E184ZAA									■		■	■		■	■	■	■	■
220,000	MA___5E224ZAA									■			■		■	■	■	■	■
270,000	MA___5E274ZAA									■			■		■	■	■	■	■
330,000	MA___5E334ZAA									■			■		■	■	■	■	■
390,000	MA___5E394ZAA									■			■		■	■	■	■	■
470,000	MA___5E474ZAA									■			■		■	■	■	■	■
560,000	MA___5E564ZAA												■		■	■	■	■	■
680,000	MA___5E684ZAA												■			■	■	■	■
820,000	MA___5E824ZAA												■			■	■	■	■
1.0 µF	MA___5E105ZAA												■			■		■	■
1.2 µF	MA___5E125ZAA															■		■	■
1.5 µF	MA___5E155ZAA															■		■	■
1.8 µF	MA___5E185ZAA															■		■	■
2.2 µF	MA___5E225ZAA															■		■	■
2.7 µF	MA___5E275ZAA																	■	■
3.3 µF	MA___5E335ZAA																		■
3.9 µF	MA___5E395ZAA																		■
4.7 µF	MA___5E475ZAA																		■
5.6 µF	MA___5E565ZAA																		■
6.8 µF	MA___5E685ZAA																		■
8.2 µF	MA___5E825ZAA																		■

For other tolerances see Part No. Codes
For other voltages see Part No. Codes.
AVX Style

Downloaded from Arrow.com.

TAPE AND REEL

CLASS I / RS-296	
A.	5mm ± 0.5mm (.200" ± 0.020")
B*.	52.4mm ± 1.5mm (2.063" ± 0.059")
C.	6.35mm ± 0.4mm (0.250" ± 0.016")
D^1-D^2.	1.4mm (0.055" MAX.)
E.	1.2mm (0.047" MAX.)
F.	1.6mm (0.063" MAX.)
G.	356mm (14.00")
H.	76mm (3.000")
I.	25.4mm (1.000")
J.	84mm (3.300")
K.	70mm (2.750")

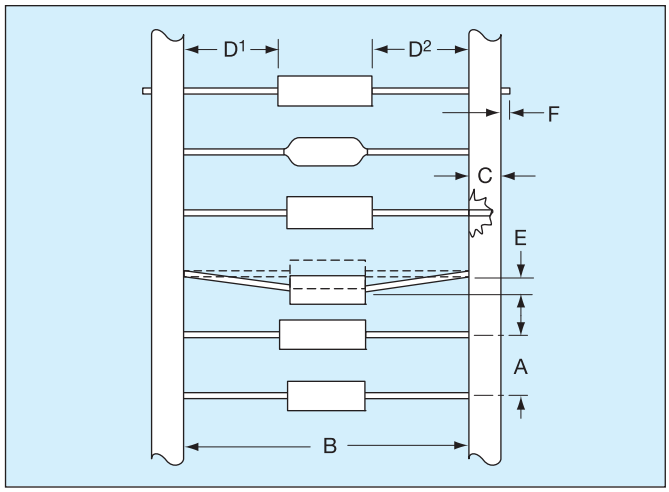

Leader Tape: 300mm min. (12")
Splicing: Tape Only
Missing Parts: 0.25% of component count max.-
No consecutive missing parts

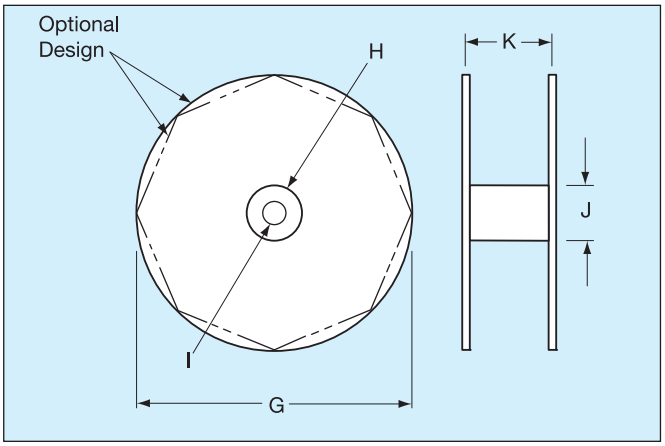

REEL QUANTITIES (MAX.) ‡

SA05	7,500 pcs.	MA10	5,000 pcs.
SA10	7,500 pcs.	MA20	5,000 pcs.
SA11	5,000 pcs.	MA30	3,000 pcs.
SA20	5,000 pcs.	MA40	3,000 pcs.
SA30	5,000 pcs.	MA50	950 pcs.
SA40	5,000 pcs.	MA60	650 pcs.

‡ 1000 pc. reels available for distribution pack only in ±1% and ±2% tolerance.

* Standard Tape Spacing Shown. Also available in 26.0mm + 1.5mm, – 0mm, (1.023 in. + .059 in. -0 in.) for SpinGuards only. EIA Class I, II and III tape spacings are available for molded axials. Tape spacing for Class II is 63.5mm ± 1.5mm (2.50 in ± .059 in), and for Class III 73mm ± 1.5mm (2.87 in ± .059 in)

ADDITIONAL PACKAGING AVAILABLE

AMMO PACK

Tape Spacing	SA05, SA10 SA20	SA11 SA30	SA40	BOX SIZES (Nominal)		
				L	W	H
52.4mm ± 1.5mm (2.062" ± .059")	4,000 pcs.	2000	2,000 pcs.	255mm (10.039")	73mm (2.874")	93mm (3.661")
26.0mm + 1.5mm - 0mm (1.023" + .059" - 0")	4,000 pcs.*	2000	2,000 pcs.*	255mm (10.039")	48mm (1.889")	113mm (4.448")

*SpinGuard only

BULK PACK (MOLDED AXIALS ONLY)

MA10 MA20 MA30 MA40	100 pcs. (bag)
MA50 MA60	50 pcs. (bag)

Downloaded from Arrow.com.