# IQS211A/B DATASHEET

Single Channel Capacitive Proximity/Touch Controller
With Movement Detection

## 1 Device Overview

The IQS211A/B ProxSense® IC is a self-capacitance controller designed for applications where an awake/activate on proximity/touch function is required. The IQS211A/B is an ultra-low power solution that uses movement detection for applications that require long term detection. The IQS211A/B operates standalone or I2C and can be configured via OTP (One Time Programmable) bits.

IQS211B offers alternate hardware with identical firmware to the IQS211A. IQS211B hardware offers improved temperature response and low temperature range.

### 1.1 Main Features

- Pin compatible with IQS127D/ 128/ 227AS/ 228AS/ 231A (output types may differ)
- Automatic Tuning Implementation (ATI)
- On-chip movement detection algorithm
- Forced activation when movement detected
- Minimal external components
- Up to 60pF sensor load (with effective movement detection)
- Up to 120pF sensor load for touch application
- Multiple One-Time-Programmable (OTP) options
- Standalone direct outputs:
- Primary output (configurable)
- Default: ACTIVATION
- Secondary output (configurable)
- Default: MOVEMENT
- 1-Wire streaming interface:
- 1-Wire & event CLK signal
- Valuable for debugging
- Various I2C configurations:
- Normal polling
- Polling with RDY interrupt on SCL
- Runtime switch to standalone mode
- Separate MOVEMENT output selection: Pulse Frequency Modulation (PFM, default), Pulse Width Modulation (PWM), Latched, or PWM only active in activation
- Low power consumption:
- 80uA (50 Hz response),
- 20uA (20 Hz response)
- sub-2uA (LP mode, optional zoom to scanning mode with wake-up)
- Low power options:
- Low power without activation
- Low power within activation
- Low power standby modes with proximity wake-up / reset wake-up
- Internal Capacitor Implementation (ICI)
- Supply voltage: 1.8V (-2%) to 3.6V

**Available Packages**

| $T_A$ | TSOT23-6 | WLCSP-8 (1.5 x 0.9 x 0.4mm) | DFN-6 |
|---|---|---|---|
| -20°C to 85°C | IQS211A | NRFND | - |
| -40°C to 85°C | IQS211B | IQS211B | IQS211B |

### 1.2 Applications

- Wearable devices
- Movement detection devices (fitness, anti-theft)
- White goods and appliances
- Human Interface Devices
- Proximity activated backlighting
- Applications with long-term activation

Copyright © Azoteq 2025
All Rights Reserved


Downloaded from Arrow.com.

## 1.3 Functional Block Diagram

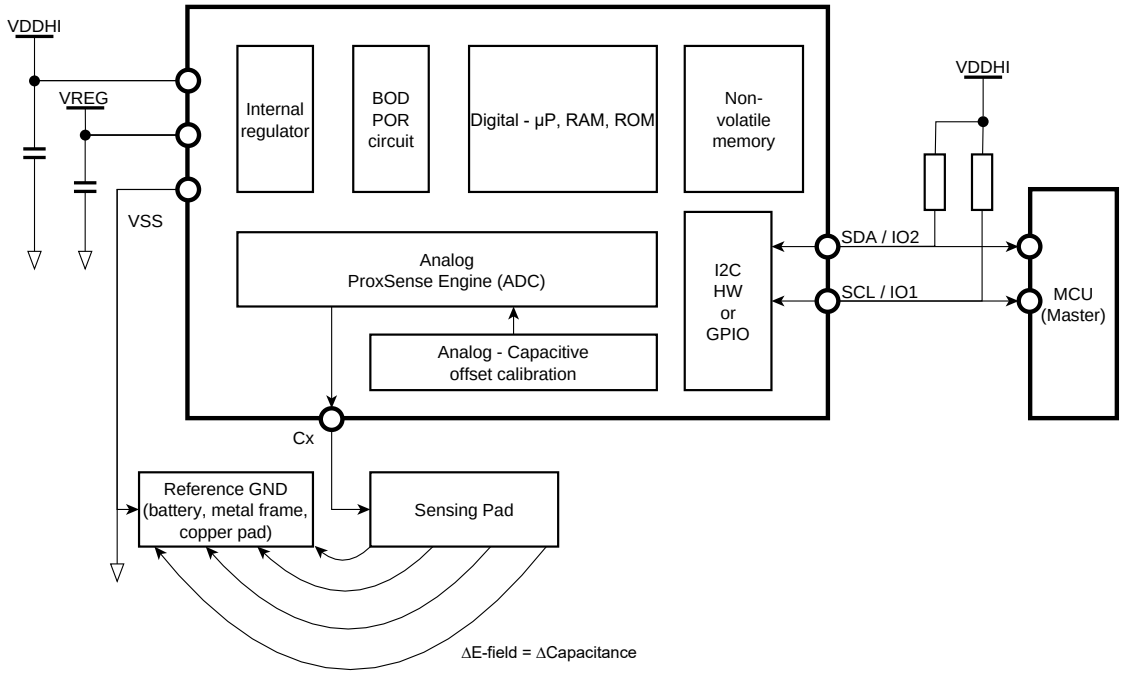


Figure 1.1 IQS211A/B Functional Block Diagram

The IQS211A/B supports relative capacitance measurements for detecting capacitance changes.

> Basic features of the IQS211A/B include:
> Charge-transfer capacitance measurement technology (Analog ProxSense® Engine)
> Finite state machine to automate detection and environmental compensation without MCU interaction (integrated microprocessor)
> Self-capacitance measurements
> Signal conditioning to provide signal gain (Analog – Capacitive offset calibration)
> Signal conditioning to provide offset compensation for parasitic capacitance (Analog – Capacitive offset calibration)
> Integrated calibration capacitors (Analog – Capacitive offset calibration)
> Integrated timer for timer triggered conversions
> Integrated LDO regulator for increased immunity to power supply noise
> Integrated oscillator
> Processing logic to perform measurement filtering, environmental compensation, threshold detection and movement detection

Copyright © Azoteq 2025
All Rights Reserved


Downloaded from Arrow.com.

## Contents

**1 DEVICE OVERVIEW ..... 1**

1.1 MAIN FEATURES ..... 1
1.2 APPLICATIONS ..... 1
1.3 FUNCTIONAL BLOCK DIAGRAM ..... 2

**2 PACKAGING AND PIN-OUT ..... 5**

2.1 TSOT23-6 PACKAGE ..... 5
2.2 WLCSP-8 PACKAGE ..... 7
2.3 DFN-6 PACKAGE ..... 9
2.4 RECOMMENDED CAPACITOR VALUES ..... 10
2.5 EXCEPTION TO RECOMMENDED CAPACITOR VALUES ..... 10

**3 CONFIGURATION OPTIONS ..... 10**

3.1 USER SELECTABLE OTP OPTIONS ..... 11
3.2 I²C REGISTERS ..... 12
*3.2.1 00H Product number ..... 12*
*3.2.2 01H Version number ..... 12*
*3.2.3 10H SYSFLAGS0 ..... 12*
*3.2.4 41H Movement Value ..... 13*
*3.2.5 42H & 43H Counts (Immediate filtered capacitance) ..... 13*
*3.2.6 83H & 84H Long term average (LTA) ..... 13*
*3.2.7 90H & 91H Touch Threshold value ..... 13*
*3.2.8 C4H MULTIPLIERS ..... 13*
*3.2.9 C5H COMPENSATION ..... 13*
*3.2.10 C6H PROX_SETTINGS0 ..... 13*
*3.2.11 C7H PROX_SETTINGS1 ..... 14*
*3.2.12 C8H PROX_SETTINGS2 ..... 14*
*3.2.13 C9H ATI_TARGET ..... 14*
*3.2.14 CAH LP_PERIOD ..... 14*
*3.2.15 CBH PROX_THRESHOLD ..... 14*
*3.2.16 CCH TOUCH_THRESHOLD ..... 15*
*3.2.17 CDH MOVEMENT_THRESHOLD ..... 15*
*3.2.18 CEH AUTO_RESEED_LIMIT ..... 15*

**4 OVERVIEW ..... 16**

4.1 DEVICE CHARACTERISTICS ..... 16
*4.1.1 Normal Threshold Operation ..... 16*
*4.1.2 Output Forced by Movement ..... 17*
*4.1.3 Long Term Recovery ..... 17*
*4.1.4 Choosing a User Interface ..... 18*
*4.1.5 Integrated features ..... 19*
*4.1.6 Communications Protocols ..... 19*
*4.1.7 Automatic Calibration ..... 20*
*4.1.8 Capacitive Sensing Method ..... 20*
4.2 OPERATION ..... 20
*4.2.1 Device Setup ..... 20*
*4.2.2 Movement Filter Response ..... 20*
*4.2.3 External Control ..... 20*
*4.2.4 Low Power Options ..... 21*
4.3 PROXSENSE® SENSITIVITY ..... 22
4.4 APPLICABILITY ..... 22

**5 DETAILS ON USER CONFIGURABLE OPTIONS ..... 23**

*5.1.1 Bank 0: Sensitivity and Scan Time Adjustments ..... 23*
*5.1.2 Bank 1: Threshold Adjustments ..... 23*

Copyright © Azoteq 2025
All Rights Reserved


Downloaded from Arrow.com.

*5.1.3 Bank 2: Timer, Output Type and User Interface Adjustment* ..... *25*
*5.1.4 Bank 3: VREG Damping, Sample Filter, Input Control and Output PWM* ..... *26*
*5.1.5 Bank 4: Partial ATI, ATI Target and Power-on Detection* ..... *27*

**6 I²C INTERFACE** ..... **29**

6.1 I²C ADDRESS ..... 29
6.2 I²C READ 29
6.3 I²C WRITE 29
6.4 I²C OPERATION ..... 30
*6.4.1 Normal I²C Polling (101)* ..... *30*
*6.4.2 I²C Polling with Reset Indication & RDY (110)* ..... *31*
*6.4.3 I²C Polling with RDY on Clock and Wake-up on Pin Change (111)* ..... *32*
6.5 I²C FLOW 32
*6.5.1 I²C Usage from Start-up* ..... *32*
*6.5.2 When to Redo ATI in I2C mode* ..... *33*

**7 SPECIFICATIONS** ..... **34**

7.1 ABSOLUTE MAXIMUM RATINGS ..... 34

**8 PACKAGE INFORMATION** ..... **36**

8.1 TSOT23-6 ..... 36
8.2 WLCSP-8 ..... 37
8.3 DFN-6 38
8.4 MSL LEVEL ..... 39

**9 ORDERING AND PART-NUMBER INFORMATION** ..... **40**

*9.1* ORDERING INFORMATION ..... 40
9.2 DEVICE MARKING – TOP ..... 41
*9.2.1 TSOT23-6 Package* ..... *41*
*9.2.2 WLCSP-8 Package* ..... *41*
*9.2.3 DFN-6 Package* ..... *42*
9.3 DEVICE MARKING - BOTTOM ..... 43
9.4 TAPE & REEL SPECIFICATION ..... 44

Copyright © Azoteq 2025
All Rights Reserved


Downloaded from Arrow.com.

## 2 Packaging and Pin-Out

The IQS211A/B is available in a TSOT23-6 or WLCSP-8 package.

### 2.1 TSOT23-6 Package

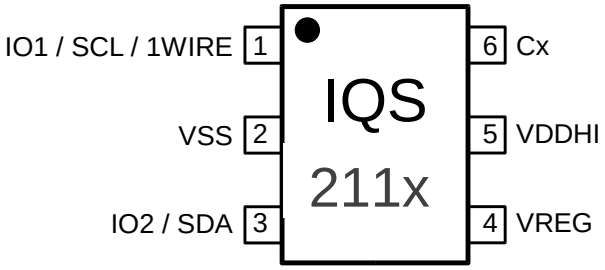


Figure 2.1 IQS211A/B Pin-out (TSOT23-6 Package)

Table 2.1 Pin-out Description

| IQS211A/B in TSOT23-6 | | | |
|---|---|---|---|
| **Pin** | **Name** | **Type** | **Function** |
| 1 | PRIMARY I/O | Digital Input/Output | Multifunction **IO1** (open-drain output[1])<br>**SCL** ($I^2C$ Clock signal) /<br>**1-WIRE** (data streaming) |
| 2 | VSS | Signal GND | |
| 3 | SECONDARY I/O | Digital Input/Output | Multifunction **IO2** (open drain output[1])<br>**SDA** ($I^2C$ Data output)<br>**EVENT**<br>**VREG Damping** (Requires OTP Bank 3, bit 3 selected) |
| 4 | VREG | Regulator output | Requires external capacitor |
| 5 | VDDHI | Supply Input | Supply: 1.764V – 3.6V |
| 6 | Cx | Sense electrode | Connect to conductive area intended for sensor |

[1] Pull-up resistor required

Copyright © Azoteq 2025
All Rights Reserved


Downloaded from Arrow.com.

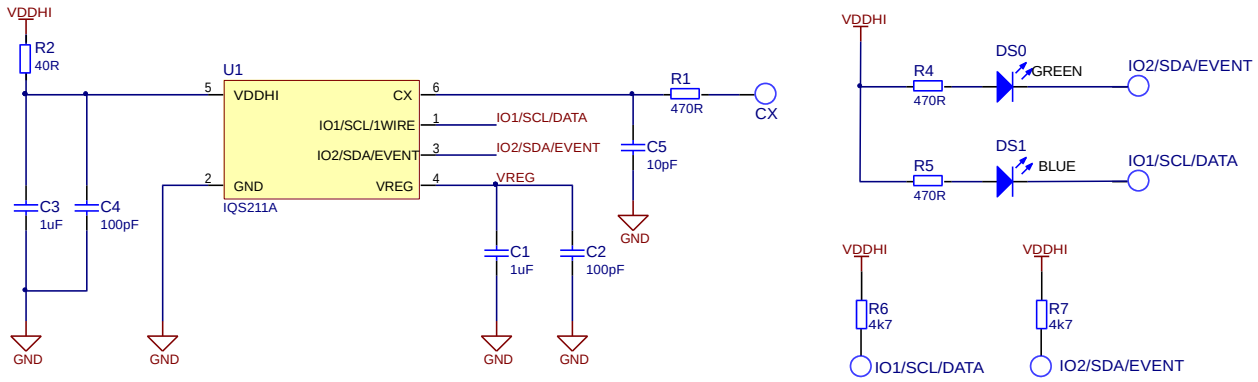


Figure 2.2 IQS211A/B Reference Schematic

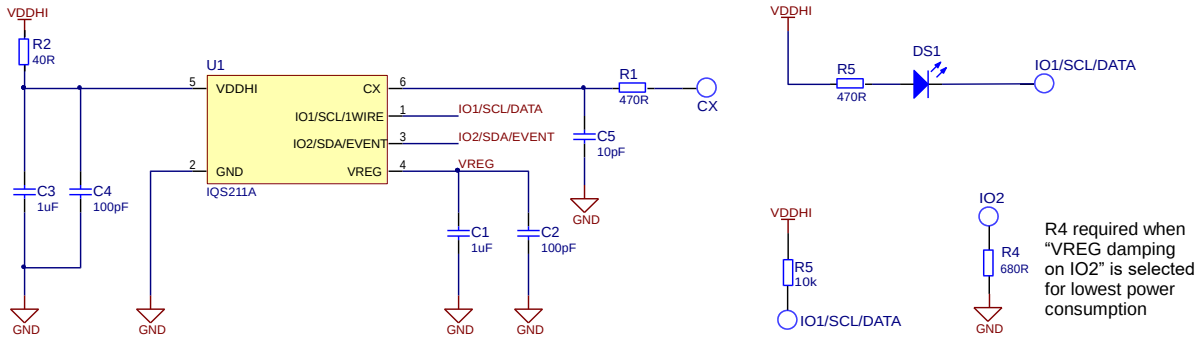


Figure 2.3 IQS211A/B Reference Schematic for Ultra-low Power (ULP) Modes with VREG Damping Through IO2 Selected (OTP bank3:bit3)

Figure 2.2 and Figure 2.3 show the reference schematics for the TSOT packages. Please take note of the following:

The 1 uF capacitors on VDDHI and VREG, C3 and C1, are for default power mode. Please see Table 2.3 to select the correct capacitors for low power modes.

C5 = Example load of 10pF. This value may vary to adjust sensitivity. 1pF for higher sensitivity and up to 60pF for proximity detection use. A total load of 120pF is allowed by the sensing system.

R1 = 470Ω 0603 for added ESD protection

R2: Place a 40Ω resistor in the VDDHI supply line to prevent a potential ESD induced latch-up. Maximum supply current should be limited to 80mA on the IQS211A/B VDDHI pin to prevent latch-up.

Copyright © Azoteq 2025
All Rights Reserved


Downloaded from Arrow.com.

## 2.2 WLCSP-8 Package

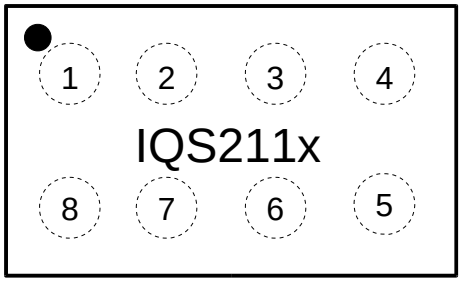


Figure 2.4 IQS211A/B 8-pin WLCSP (top view)

Table 2.2 8-pin WLCSP Pin-out Description

| IQS211A/B 8-pin WLCSP | | | |
|---|---|---|---|
| **Pin** | **Name** | **Type** | **Function** |
| 1 | Cx | Sense electrode | Connect to conductive area intended for sensor |
| 2 | PRIMARY I/O | Digital Input/Output | Multifunction **IO1** (open-drain output[2])<br>**SCL** ($I^2C$ Clock signal)<br>**1-WIRE** |
| 3 | VREG | Regulator output | Requires external capacitor |
| 4 | VSS | Signal GND | |
| 5 | NC / DAMP | Digital Input/Output | Floating input during runtime.<br>Recommended: Connect to IO2<br>**VREG Damping**: Connect to GND through 680R resistor. (Requires OTP Bank 3, bit 3 selected) |
| 6 | SECONDARY I/O | Digital Input/Output | Multifunction **IO2** (open drain output[2])<br>**SDA** ($I^2C$ Data output)<br>**EVENT** |
| 7 | VDDHI | Supply Input | Supply: 1.764V – 3.6V |
| 8 | PGM | Configuration pin | Connection for OTP programming. Floating input during runtime.<br>Recommended: Connect to IO1/SCL pin. Programming can still be performed using this pin, provided a diode is used. (See AZD026 – Configuration Tools Overview) |

[2] Requires pull-up resistor

Copyright © Azoteq 2025
All Rights Reserved


Downloaded from Arrow.com.

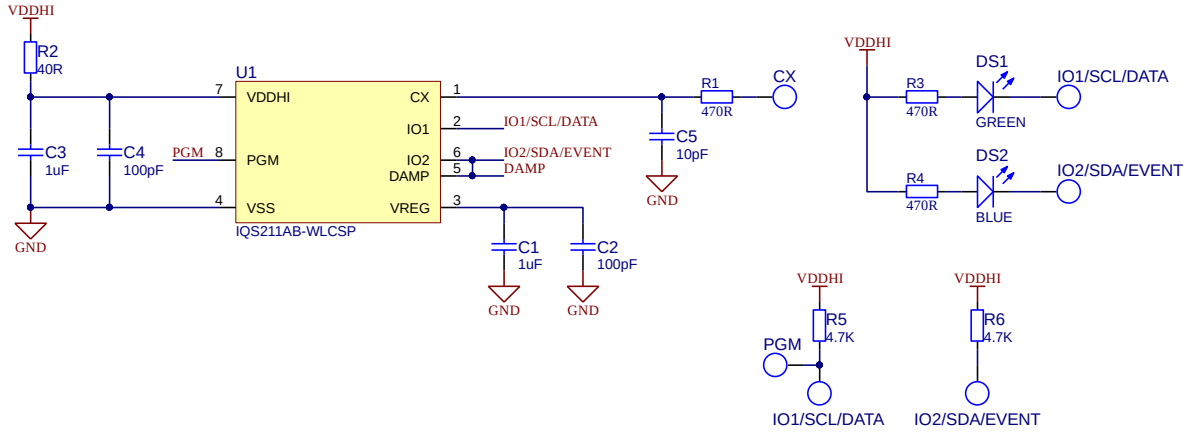


Figure 2.5 IQS211A/B WLCSP Reference Schematic

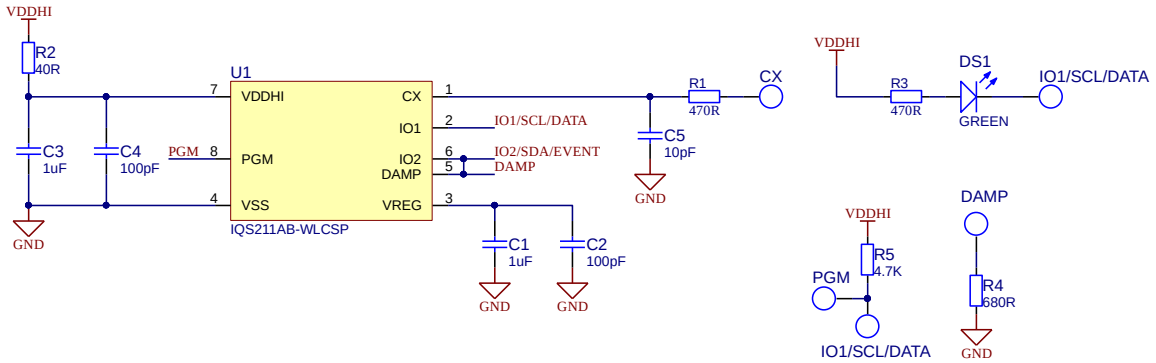


Figure 2.6 IQS211A/B WLCSP Reference Schematic with VREG Damping Enabled (OTP bank3: bit3)

Figure *2.5* and Figure *2.6* show the reference designs for the chip-scale packages. Please take note of the following:

The 1uF capacitors on VDDHI and VREG, C3 and C1, are for default power mode. Please see Table 2.3 to select the correct capacitors for low power modes.

C5 = Example load of 10pF. This value may vary to adjust sensitivity. 1pF for higher sensitivity and up to 60pF for proximity detection use. A total load of 120pF is allowed by the sensing system.

R1 = 470Ω 0603 for added ESD protection

R2: Place a 40Ω resistor in the VDDHI supply line to prevent a potential ESD induced latch-up. Maximum supply current should be limited to 80mA on the IQS211A/B VDDHI pin to prevent latch-up.

PGM should be connected directly to IO1/SCL/DATA.

- DAMP should be connected directly to IO2/SDA/EVENT.

Copyright © Azoteq 2025
All Rights Reserved


Downloaded from Arrow.com.

## 2.3 DFN-6 Package

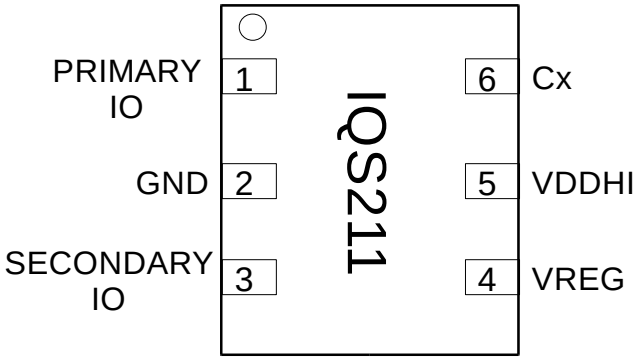


**IQS211B in DFN-6**

| Pin | Name | Type | Function |
|---|---|---|---|
| 1 | PRIMARY I/O | Digital Input/Output | Multifunction **IO1** (open-drain output[3])<br>**SCL** ($I^2C$ Clock signal) /<br>**1-WIRE** (data streaming) |
| 2 | VSS | Signal GND | |
| 3 | SECONDARY I/O | Digital Input/Output | Multifunction **IO2** (open drain output[1])<br>**SDA** ($I^2C$ Data output)<br>**EVENT**<br>**VREG Damping** (Requires OTP Bank 3, bit 3 selected) |
| 4 | VREG | Regulator output | Requires external capacitor |
| 5 | VDDHI | Supply Input | Supply: 1.764V – 3.6V |
| 6 | Cx | Sense electrode | Connect to conductive area intended for sensor |

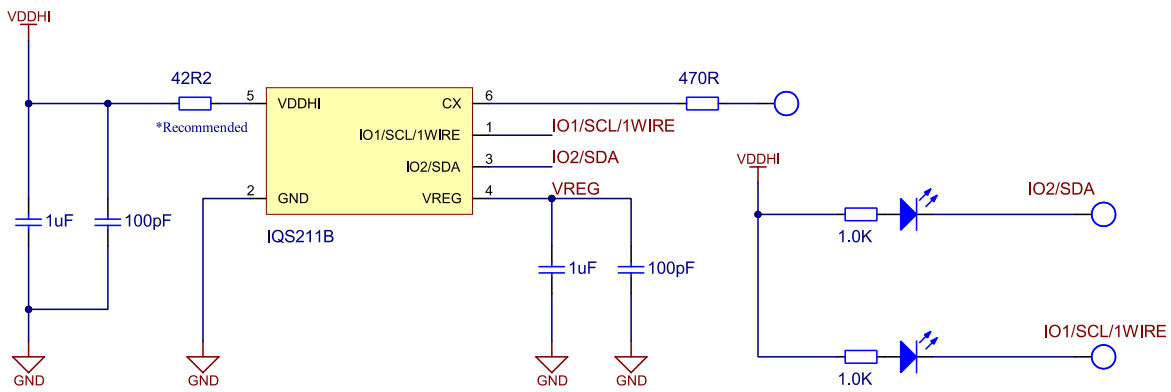


[3] Pull-up resistor required



Downloaded from Arrow.com.

## 2.4 Recommended Capacitor Values

The VREG capacitor value (C1) is chosen to ensure VREG remains above the maximum BOD specification stated in Table 7.2. The combination of C1 (VREG) and C3 (VDDHI) is chosen to prevent a potential ESD issue.

**Known issue:** In some cases, the IQS211A/B will not recover from ESD events. In cases where a high current source or regulator with low impedance path is present (a source that keeps VDDHI above the BOD level), the ESD event drains the VREG capacitor, but VDDHI voltage remains above BOD. When the ESD event is timed with the "sleep" power mode it causes a firmware run-time failure that only recovers when forcing a POR on VDDHI.

Recommended values to prevent this is shown in Table 2.3.

*Table 2.3 VDDHI and VREG capacitor size recommendation to prevent ESD issues with typical hardware combinations*

| Low power scan time | 8ms (default) - 32ms | 64ms | 128ms | 160ms |
|---|---|---|---|---|
| Capacitor recommendation | C1 = 1µF<br>C3 = 1µF | C1 = 4.7µF<br>C3 = 2.2µF | C1 = 4.7µF<br>C3 = 2.2µF | C1 = 4.7µF<br>C3 = 2.2µF |

## 2.5 Exception to recommended capacitor values

In applications where the VDDHI source has high internal resistance or a high resistance path, it will be required to ensure C3 > C1 to prevent a VDDHI BOD after the IC sleep cycle (see Figure 4.12).

Table 2.4 Capacitor Values for VDDHI (C3) and VREG (C1) under certain supply voltage conditions

| Low power scan time | 8ms (default) - 32ms | 64ms | 128ms | 160ms |
|---|---|---|---|---|
| Capacitor recommendation | C1 = 1µF<br>C3 = 1µF | C1 = 2.2µF<br>C3 = 4.7µF | C1 = 4.7µF<br>C3 = 10µF | C1 = 4.7µF<br>C3 = 10µF |

# 3 Configuration Options

The I/QS211A/B offers various user selectable options. These options may be selected via I2C setup or one-time programmable (OTP) configuration. OTP settings may be ordered pre-programmed for bulk orders. I2C setup allows access to all device settings while entering direct output mode as soon as selected by the MCU.

Azoteq offers a Configuration Tool (CT210 or later) and associated software that can be used to program the OTP user options for prototyping purposes. For further information regarding this subject, please contact your local distributor or submit enquiries to Azoteq at: info@azoteq.com

*Please note: In circuit programming of the OTP options are not recommended and Azoteq is unable to assist in any in-circuit programming designs*

Copyright © Azoteq 2025
All Rights Reserved


Downloaded from Arrow.com.

## 3.1 User Selectable OTP Options

| OTP bank 0 | | | IQS211A/B 000000**xx** TSR/CSR/DNR (ordering code) | | | | |
|---|---|---|---|---|---|---|---|
| Bit7 | 6 | 5 | 4 | 3 | 2 | 1 | Bit 0 |
| Base Value / Coarse multiplier | | Scan times | | Prox wake-up | Low-power scan time | | |
| 00 – 150 counts / 0<br>01 – 75 / 1<br>10 – 100 / 2<br>11 – 200 / 3<br>See Proxsense® sensitivity | | Idle / Active<br>00 - 9/9ms<br>01 - 9/64<br>10 - 32/32<br>11 - 32/64<br>See Figure 4.11 | | 0 – Active direction<br>1 – Both directions*<br>*Known issue | 000 - 9ms<br>001 - 32ms<br>010 - 64ms<br>011 - 96ms<br>100- 128ms<br>101 - 160ms<br>110 - 192ms<br>111 - 256ms<br>sub-2µA | | |
| OTP Bank 1 | | | IQS211A/B 0000**xx**00 TSR/CSR/DNR | | | | |
| Bit7 | 6 | 5 | 4 | 3 | 2 | 1 | Bit 0 |
| Touch late release(50%) | Filter halt / Wake-up threshold | | Touch threshold | | | Movement threshold | |
| 0 – Disabled<br>1 – Enabled | 00 – 4 counts (+2 LP)<br>01 – 2 (+2 LP)<br>10 – 8 (+2 LP)<br>11 – 16 (+2 LP) | | 000 – 6/256 of LTA<br>001 – 2/256<br>Proximity levels 2x Debounced (slower wakeup)<br>010 – 16/256<br>011 – 32/256<br>100 – 48/256<br>101 – 64/256<br>110 – 80/256<br>111 – 96/256<br>Touch levels Un-debounced (quick wake-up) | | | 00 – 3 counts<br>01 – 6<br>10 – 15<br>11 – 2 | |
| OTP Bank 2 | | | IQS211A/B 00**xx**0000 TSR/CSR/DNR | | | | |
| Bit7 | 6 | 5 | 4 | 3 | 2 | 1 | Bit 0 |
| Reseed after no movement time | | | Movement output type | | Output / User interface selection | | |
| 000 - 2s<br>001 - 5s<br>010 - 20s<br>011 - 1min<br>100 - 2min<br>101 - 10min<br>110 - 60min<br>111 - always halt | | | 00 -Normal (PFM)<br>01 - PWM<br>10 - Constant Movement, clears upon no movement timeout<br>11 - PFM combined with activation output | | 000 -Activation (IO1) & Movement (IO2)<br>001 -Movement Latch(IO1) and Movement (IO2)<br>010 – Movement (IO1) & Input (IO2)<br>011 - Touch (IO1), Prox (IO2)<br>100 - 1Wire (IO1) & Clk (IO2) (only on events)<br>101 - I2C (polling*) no wakeup<br>110 - I2C with reset indication + RDY toggle on SCL<br>111 - I2C (polling*) +Wakeup + RDY toggle on SCL<br>I2C address fixed on 0x47<br>Runtime change from I2C to standalone is possible | | |
| OTP Bank 3 | | | IQS211A/B 0**x**000000 TSR/CSR/DNR | | | | |
| Bit7 | 6 | 5 | 4 | 3 | 2 | 1 | Bit 0 |
| Reserved | | | | VREG damping | AC Filter | Halt charge / Reseed on IO1 | IO1 (output) / IO2 (input) definition |
| | | | | 0 – Disabled<br>1 – Enabled (sub-2µA) | 0 – Normal<br>1 – Increased | 0 – Disabled<br>1 – Enabled | 0 – Normal / Halt charge<br>1 – PWM / Reduce sensitivity |
| OTP Bank 4 | | | IQS211A/B **x**0000000 TSR/CSR/DNR | | | | |
| Bit7 | 6 | 5 | 4 | 3 | 2 | 1 | Bit 0 |
| Reserved | | | | ATI partial | Auto activation (when compensation multiplier > 7) | ATI target | |
| | | | | 0 – Disabled<br>1 – Enabled | 0 – Disabled<br>1 – Enabled | 00 – 768 counts<br>01 – 1200<br>10 – 384<br>11 – 192<br>sub-2µA | |

* For sub-2µA power consumption see: “Low-power scan time”, “VREG damping” and “ATI target” settings

Copyright © Azoteq 2025
All Rights Reserved


Downloaded from Arrow.com.

## 3.2 I²C Registers

Table 1.1 I²C Communications Layout

| I2C Communications Layout | | | | | | | | | | | |
|---|---|---|---|---|---|---|---|---|---|---|---|
| **Address/ Command/ Byte** | **Register name/s** | **R/W** | **Default Value** | **Bit 7** | **Bit 6** | **Bit 5** | **Bit 4** | **Bit 3** | **Bit 2** | **Bit 1** | **Bit 0** |
| 00H | PRODUCT_NUM | R | 0x3D | | | | | | | | |
| 01H | VERSION_NUM | R | 0x01 (IQS211A)<br>0x02 (IQS211B) | | | | | | | | |
| 10H | SYSFLAGS0 | R/W | | Movement | Movement Constant | PROX | TOUCH | Show Reset | ATI Busy | Filter Halt | LP Active |
| 41H | Movement Value | R | | | | | | | | | |
| 42H | CS_H | R | | | | | | | | | |
| 43H | CS_L | R | | | | | | | | | |
| 83H | LTA_H | R | | | | | | | | | |
| 84H | LTA_L | R | | | | | | | | | |
| 90H | Touch Threshold_H | | | | | | | | | | |
| 91H | Touch Threshold_L | | | | | | | | | | |
| C4H | MULTIPLIERS | R/W | | n/a | n/a | Coarse multiplier | | Fine multiplier | | | |
| C5H | COMPENSATION | R/W | | 0-255 | | | | | | | |
| C6H | PROX_SETTINGS0 | R/W | | Base Value/ Coarse multiplier for Partial ATI:<br>00 – 150/0<br>01 – 75/1<br>10 – 100/2<br>11 – 200/3 | | Do reseed | Redo ATI | Prox direction<br>0 – Active direction<br>1 – Both directions | n/a | | |
| C7H | PROX_SETTINGS1 | R/W | | 0 – Auto reseed is in seconds<br>1 – Auto reseed is in minutes | If UI type 011:<br>0- Halt charge/Reseed<br>1- Reduce sensitivity<br><br>If UI type 000:<br>0- Normal<br>1- PWM touch out | Halt Charge/Reseed on IO1, with IO1 set as output | 00 –Normal (PFM)<br>01 – PWM<br>10 – Constant Movement, clears upon no movement timeout<br>11 – PFM combined with activation output | | 000 –Activation(IO1) & Movement(IO2)<br>001 –Movement Latch(IO1) and Movement (IO2)<br>010 – Movement(IO1) & Input(IO2)<br>011 – Touch (IO1), Prox (IO2)<br>100 – 1Wire (IO1) & Clk (IO2) (only on events)<br>101 – I2C (polling) no wakeup<br>110 - I2C with reset indication +RDY toggle on SCL<br>111 – I2C (polling) + Wakeup + RDY toggle on SCL<br><br>It is possible to change to non-I2C modes when in I2C mode. I2C functionality will only return after a power cycle | | |
| C8H | PROX_SETTINGS2 | R/W | | 0 – Prox Timeout of 2s<br>1 – Prox timeout of 20s | n/a | AUTO Activation on start up | n/a | Touch Late Release (50%) | Partial ATI enabled | Auto ATI off | Increase AC filters, increase touch threshold with 10counts, halt with 4 |
| C9H | ATI_TARGET | R/W | | x * 8 = ATI target | | | | | | | |
| CAH | LP_PERIOD | R/W | | x * 4 ms = sleep time | | | | | | | |
| CBH | PROX_THRESHOLD | R/W | | | | | | | | | |
| CCH | TOUCH_THRESHOLD | R/W | | | | | | | | | |
| CDH | MOVEMENT_THRESHOLD | R/W | | | | | | | | | |
| CEH | AUTO_RESEED_LIMIT | R/W | | in Seconds or Minutes, based on PROX_SETTINGS1 bit 7. | | | | | | | |

### 3.2.1 00H Product number

The product number is **0x3D**

### 3.2.2 01H Version number

The firmware version number is **0x01/ 0x02** depending on the choice of IC. Firmware is identical for both versions but makes tracking of IC type (A/B) possible

### 3.2.3 10H SYSFLAGS0

**Bit7: Movement** – this bit is set with each movement event and reset once the system does not detect movement

**Bit6: Movement Latch** – this bit is set only when a movement latch option is enabled, and a movement is detected. The bit is cleared only when a no-movement time-out occurs. A soft reset operation does not clear this bit.

Copyright © Azoteq 2025
All Rights Reserved


Downloaded from Arrow.com.

**Bit5: PROX** – the prox bit is the same as the LTA filter halt for "freezing" the reference counts. This bit is set and reset based on the proximity/filter halt threshold and is always active independent of the user interface.

**Bit4: TOUCH** – the touch bit is the main activation output of the system. Any user interface that includes an activation event is based on this bit.

**Bit3: Show reset –** This bit is written at each hard-reset event. Manually clear this bit and monitor for detecting hardware reset events.

**Bit2: ATI busy –** The ATI busy indicates a period where the operating point of the device is being determined (calibration). Reading count values and status values may be inaccurate in this time.

**Bit1: Filter Halt –** The filter halt and PROX bit are very similar. Usually they will have the same value. The exception is when a debounced proximity event is not detected while a undebounced touch event is detected. In this case the filter halt will trigger, but not the PROX bit.

**Bit0: LP active –** With any low power mode active in register "CAH", this bit is set. Low power modes available in register "C6H" do not affect this bit. This bit is set when no interaction leads to a low power state with no proximity or touch events.

### 3.2.4 41H Movement Value

The 8-bit movement value is an average of movement pulses over a time period. The value indicates intensity of movement over a short period.

### 3.2.5 42H & 43H Counts (Immediate filtered capacitance)

The counts are directly proportional to capacitance and the system is calibrated to make the counts as sensitive as possible to changes in capacitance for relative measurements

### 3.2.6 83H & 84H Long term average (LTA)

The LTA is used as reference to compare with counts. The LTA will follow slow environmental changes with temperature, but will freeze once an event is triggered, calling a LTA "filter halt".

### 3.2.7 90H & 91H Touch Threshold value

The touch threshold value here is calculated from the chosen value in register "CCH". The value will indicate at which value the counts will trigger a touch event.

### 3.2.8 C4H MULTIPLIERS

The multipliers register is a combination of the sensitivity multiplier and compensation multiplier values. These values are determined by the calibration routine and give an indication of the capacitive load on the system.

### 3.2.9 C5H COMPENSATION

The COMPENSATION is also part of the calibration routine and offers gain to the system.

### 3.2.10 C6H PROX_SETTINGS0

**Bit 7-6: Base value –** as described in section 5.1.1 under Base Value (Sensitivity Multiplier in Partial ATI Mode).
**Bit 5: Reseed –** The reseed command will equal the LTA to the counts. When the LTA is inside the boundary set for the chosen target, the reseed will not cause a re-calibration. When the LTA is out of this boundary, an automatic re-calibration will be done.
**Bit 4: Redo-ATI –** The redo-ATI command will force a recalibration. The bit is automatically cleared after the operation.

Copyright © Azoteq 2025
All Rights Reserved


Downloaded from Arrow.com.

**Bit 3: Prox direction** – The prox direction bit determines whether the prox status flag will be set for a delta in either direction, a rise or decrease in counts, or only for the active direction.

### 3.2.11 C7H PROX_SETTINGS1

For more information see section 5.1.3.

**Bit 7: Auto reseed time guide –** Auto-reseed time guide selection of the value set in register "CEH". With this bit set the value of "CEH" will be in minutes and with this bit cleared, it will be in seconds.
**Bit 6:** Bit (applies only to certain UIs)
**Bit 5:** Activation output with input reseed & reset (halt charge) feature
**Bit 4-3:** Movement output type
**Bit 2-0:** User Interface Settings

### 3.2.12 C8H PROX_SETTINGS2

**Bit 7: PROX/Filter halt time-out definition –** With this bit cleared the filter halt is only kept for 2 seconds when no movement is detected during this period. With this bit set the filter halt condition remains for 20seconds when no movement is detected. A movement event will reset this timer. This option is only available in I²C mode.
**Bit 5:** Auto Activation at power-up when P>7 (absolute capacitance detection method, partial ATI must be enabled, select sensitivity with the "Sensitivity Multiplier")
**Bit 3:** Touch late release (50% of touch threshold)
**Bit 2:** Partial ATI
**Bit 1: Auto-ATI off –** With this bit set, the ATI algorithm will only execute with a "Redo-ATI" command. A no-movement time-out will execute a simple "reseed" command without the possibility of a recalibration occurring.
**Bit 0:** AC filter increase

### 3.2.13 C9H ATI_TARGET

Calibration routines will attempt to get the counts as close as possible to this target count. Although it is possible to reach a 2048 count target, it is recommended to aim for a maximum target of 1600 for the effect of noise and environment on the system.

### 3.2.14 CAH LP_PERIOD

The low power period refers to the part of the scan period where no communications or sensing is done. This period is indicated as the "sleep time" in Figure 4.11.

### 3.2.15 CBH PROX_THRESHOLD

The value chosen is a ratio applied to the target and more specifically, the actual count value after aiming for a specific target.
The equation for deriving actual counts of the threshold below the LTA is as follows:

$$P_{TH\ actual}=\frac{LTA\times P_{TH}}{256}$$

As example take $P_{TH}$ = 4 with a target of 1200 and actual counts reached = 1180:

$$P_{TH\ actual}=\frac{LTA\times P_{TH}}{256}=\frac{1180\times 4}{256}=18\ counts$$

In this case the proximity event will trigger, and the LTA filter halt is activated when the counts fall 18 counts below the LTA.
Threshold values are not dynamic and are locked at time of calibration.

Copyright © Azoteq 2025
All Rights Reserved


Downloaded from Arrow.com.

### 3.2.16 CCH TOUCH_THRESHOLD

The touch threshold value is determined in the same way as the PROX_THRESHOLD above. When the TOUCH_TRESHOLD is ≥ 15, the touch is un-debounced. Touch flags are set, but streaming counts remain filtered, not indicating the event.

### 3.2.17 CDH MOVEMENT_THRESHOLD

The movement threshold value is determined in the same way as the PROX_THRESHOLD above. If using the movement feature, this value should be < 25.

### 3.2.18 CEH AUTO_RESEED_LIMIT

The automatic reseed time limit may be fine-tuned from:
1 to 255 seconds with C7H bit 7 cleared (always halt with CEH = 0xFF)
1 to 255 minutes with C7H bit 7 set (always halt with CEH = 0xFF)

Copyright © Azoteq 2025
All Rights Reserved


Downloaded from Arrow.com.

# 4 Overview

## 4.1 Device characteristics

The IQS211A/B is a device tailored for long term proximity or touch activations. It mainly offers two digital output pins, one with an activation threshold for large capacitive shifts and the other with a threshold for small movements even during a normal activation. There are also a few options to combine these two digital outputs where the application only allows for 1 output pin. These two outputs may be read via the IC pins in standalone mode or used for communications via I²C or 1-Wire streaming mode.

Various configurations are available via one-time programmable (OTP) options. I²C mode also has access to all these settings.

The movement output may be chosen to have a specific characteristic. This may be PFM (movement intensity via pulse count per time window), PWM, latched output or PWM combined with the normal threshold activation.

### 4.1.1 Normal Threshold Operation

With a normal activation (hand brought close) the output will become active. The output will de-activate as soon as the action is reversed (hand taken away). In addition a separate movement output will become active when movement is detected according to a movement threshold. Movement may be detected before the

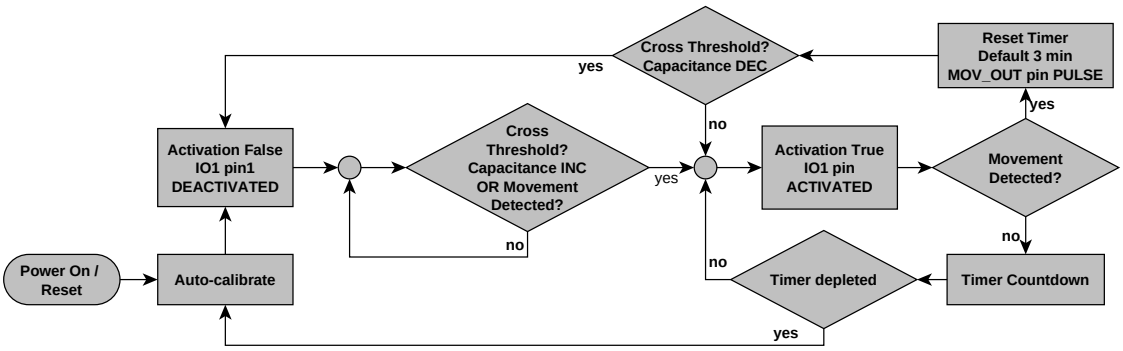


Figure 4.1 Flow Diagram of the Typical IQS211A/B Movement-based User Interface

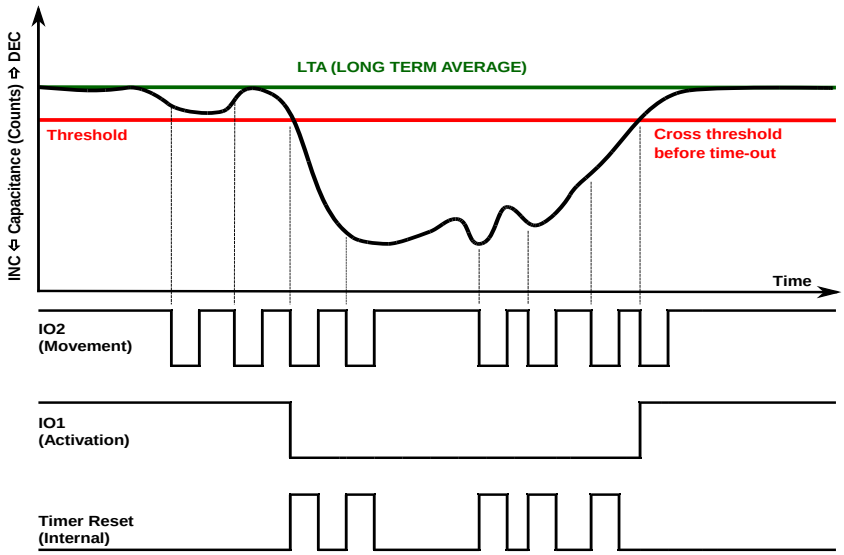


Figure 4.2 Plot of IQS211A/B Streaming Data Along with The Digital Response



Downloaded from Arrow.com.

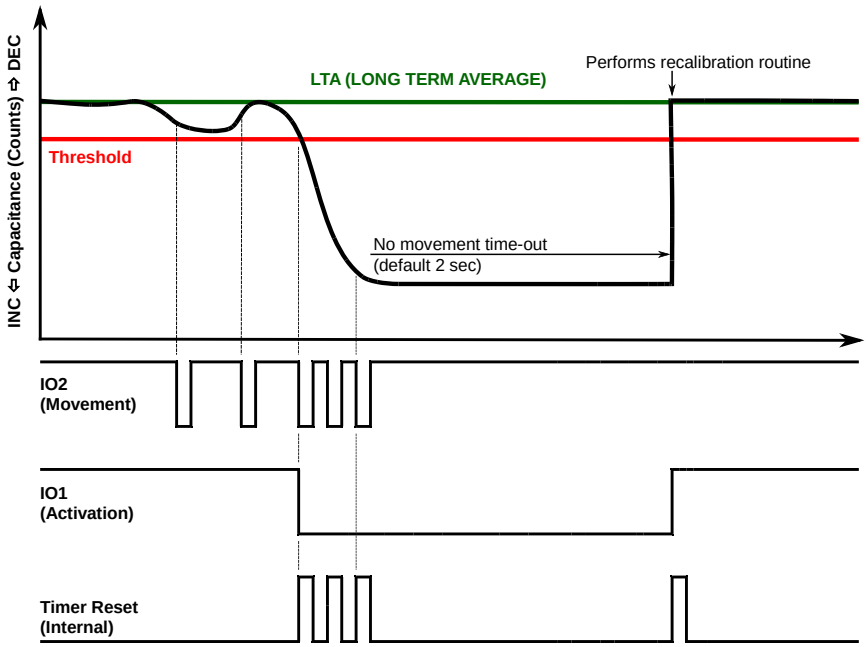


Figure 4.3 Example of a Time-out Event with Recalibration

normal threshold is crossed. Movement detection is done via a completely separate digital filter while improving the efficiency of the sensor output (timer reset on movement).

In a normal activation the output will stay active for as long as movements are detected. A time-out timer (configurable time) will be reset with each movement.

### 4.1.2 Output Forced by Movement

There is the option to force the output active for each movement detected. The output will be cleared as soon as there is no movement for the selected timer period.

### 4.1.3 Long Term Recovery

When changing the sensor capacitive environment, the sensor will adapt to the new environment. If the new environment decreases capacitance (wooden table to air), the sensor will rapidly adapt in order to accept new human activations. If the new environment increases capacitance (like air to steel table), the sensor will remain in activation until a time-out occurs (as seen in Figure 4.3) or until the device is returned to its previous environment.

When the timer runs out, the output will be de-activated. Re-calibration is possible after de-activation because the timer will only time-out with no movement around the sensor.

Copyright © Azoteq 2025
All Rights Reserved


Downloaded from Arrow.com.

### 4.1.4 Choosing a User Interface

The user interface can be defined via OTP options or via an I²C register

**ACTIVATION & MOVEMENT UI**

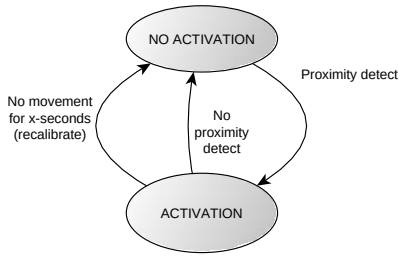


Figure 4.4 ACTIVATION & MOVEMENT UI State Diagram

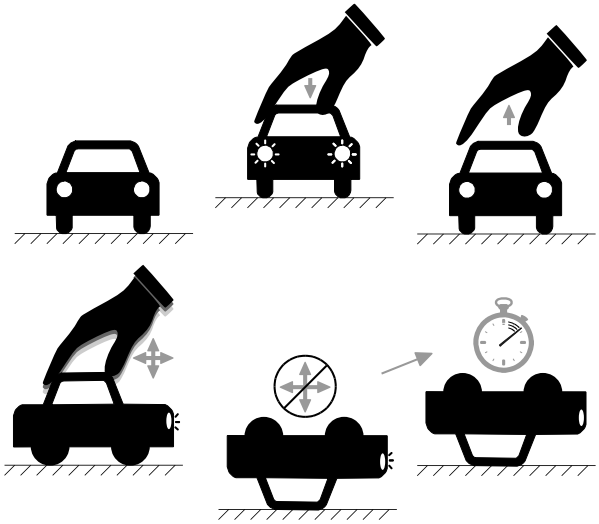

Figure 4.5 Toy Car Example of Default UI

1. Lights off
2. Touch roof, lights on
3. No touch on roof, lights off
4. While in use (movement), lights on
5. Roof on ground = touch
6. No movement causes time-out, lights off

**MOVEMENT LATCH & MOVEMENT UI**

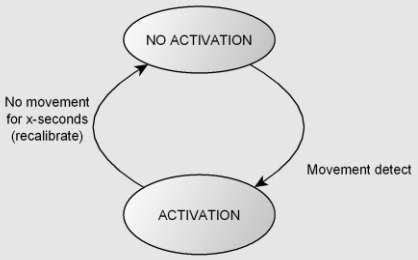


*Figure 4.6 MOVEMENT LATCH UI State Diagram*

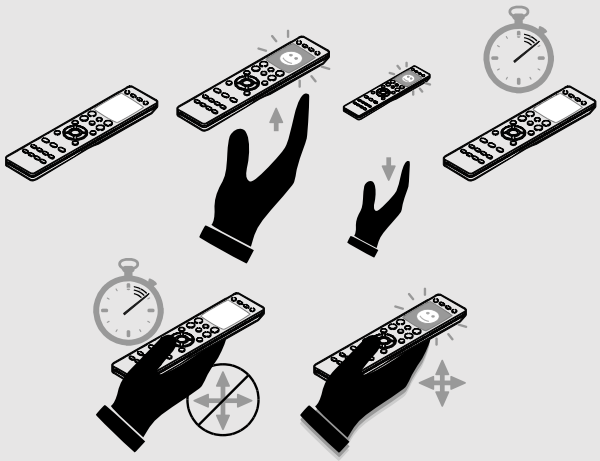

Figure 4.7 Remote Control Example of Movement Latch UI Application

1. Remote backlight/LCD off
2. Hand close to remote = LCD on
3. Hand away, then LCD remains on
4. LCD off after no movement time-out
5. If remote in hand, but LCD off, then any small movement turns on LCD.
6. While in hand and movement, LCD remains on.

Copyright © Azoteq 2025
All Rights Reserved


Downloaded from Arrow.com.

**MOVEMENT & INPUT UI**

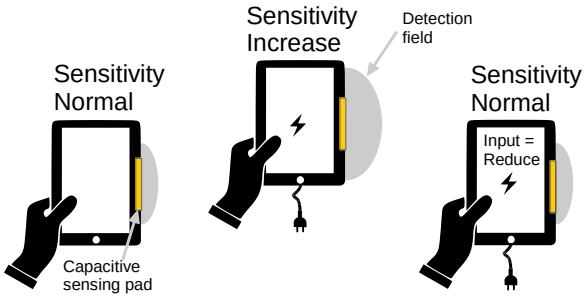


Figure 4.8 Device Charging Example of Input UI

Device is operating on battery with designed sensitivity

Device is plugged-in for charging

Device ground reference changes and sensitivity increases

Input is given to reduce sensitivity

**PROX & TOUCH UI**

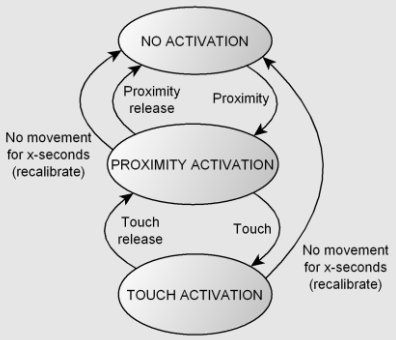


Figure 4.9 Proximity and Touch State Diagram

Figure 4.10 Proximity and Touch UI Example

Proximity to the device activates proximity output

Touching the device activates the touch output (proximity remains triggered)

Movement features are integrated and function the same as in the default "ACTIVATION & MOVEMENT" user interface

### 4.1.5 Integrated features

The device includes an internal voltage regulator and reference capacitor ($C_S$).

Various advanced signal processing techniques are combined for creating a robust solution.

These techniques include:

- Movement detection filter (to release an activation in the case of inactivity)
- Advanced noise filtering on incoming sample stream
- Superior methods of parasitic capacitance compensation while preserving sensitivity
- Unique option for capacitive load dependant activation on power-on

### 4.1.6 Communications Protocols

The IQS211A/B offers a wide range of data streaming modes each with a specific purpose.

Standard 2-wire I2C polling is offered to access the entire range of settings and data offered by the IQS211A/B.

Another I2C option allows the device to be configured via I2C then jump to any of the other modes when the communication window is closed. This option is offered to give full control over selecting settings while simplifying the main-loop code by only responding to direct digital outputs. The digital output pair will contain signature pulses to indicate power-on reset or an unexpected reset occurrence. $I^2C$ configuration should be re-initiated in the event of an IQS211A/B reset.

A 1-wire data streaming interface is offered for access to a variety of data over a single line. The 1-wire implementation may be enhanced (by using the IO2 pin) by only reading data when the IO2 clock pin toggles. The clock pin will only toggle when an event is active and produce a clock signal during this active period.

1-wire data streaming is a special use case for debugging with optical isolation and Azoteq PC software. For other requirements, please contact Azoteq at info@azoteq.com

Copyright © Azoteq 2025
All Rights Reserved


Downloaded from Arrow.com.

### 4.1.7 Automatic Calibration

Proven Automatic Tuning Implementation (ATI) algorithms are used to calibrate the device to the sense electrode. This algorithm is optimised for applications where a fixed detection distance is required.

### 4.1.8 Capacitive Sensing Method

The *charge transfer* method of capacitive sensing is employed on the IQS211A/B. Charge is continuously transferred from the Cx capacitor into a charge collection capacitor (internal) until this capacitor reaches a trip voltage. A “transfer cycle” refers to the charging of Cx and transferring the charge to the collection capacitor. The “charge cycle” refers to process of charging the collection capacitor to a trip voltage using charge transfers. A charge cycle is used to take a measurement of the capacitance of a sense “pad” or “electrode” relative to signal earth at a specific time.

## 4.2 Operation

### 4.2.1 Device Setup

The device may be purchased pre-configured (large orders or popular configurations), programmed in-circuit during production or simply setup via $I^2C$.

### 4.2.2 Movement Filter Response

The movement filter runs continually, and the dedicated digital output will activate in PFM (pulse frequency modulation), PWM or latched mode.

### 4.2.3 External Control

With certain user interfaces, the “multifunction IO2” (optional line to connect to master device) can be used to signal:

a “halt (sleep mode) and reseed” or “reduce sensitivity” in MOV&INPUT mode.

a “halt (sleep mode) and reseed” in ACT&MOV mode. When enabled, the ACT output reads the input periodically.

#### RESEED

A short pulse (t > 15ms, t < 25ms) will force the reference counts (long-term average) to match the actual counts (capacitance of sensor). The short pulse for a reseed operation also applies to the user configurable input option: “Reduce sensitivity”.

#### HALT CHARGE (& RESET)

By writing the pin low for a longer time (t > 50ms), will force the IC into “halt charge” for low current consumption. It is important to consider current through the pull-up resistor when in sleep mode.

The IC will perform a soft reset as soon as the pin is released after 50ms or more. With a soft reset the IC will remember the activation state when going into the “halt charge” mode. The state will be recalled at the reset operation and cleared along with the calibration.

In order to achieve a “halt charge” state with minimal power consumption it is recommended to configure the MCU output as push-pull for the input pin and perform the “halt charge”. With the “movement latch” function defined, do the operation twice to clear a possible activation at the time of calling a “halt charge”.

#### REDUCE SENSITIVITY

With a configurable bit the system sensitivity may be changed. The input may be used to reduce sensitivity in the following way:

- AC filter doubles in strength
- Proximity threshold (filter halt) is increased by 4 counts
- Activation threshold is increased by 10 counts
- Movement sensitivity threshold is not changed

Copyright © Azoteq 2025
All Rights Reserved


Downloaded from Arrow.com.

### 4.2.4 Low Power Options

Various low-power configurations are offered in order to achieve the required current consumption during activated and non-activated conditions.

These low power configurations make the power consumption and product response highly configurable during various events.

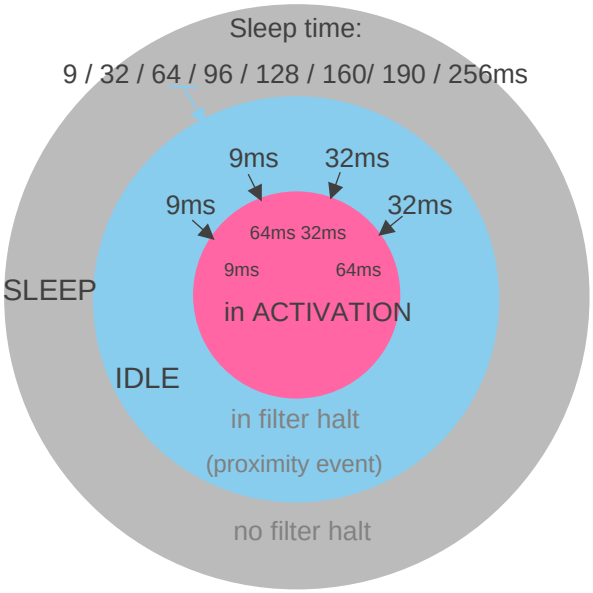


Figure 4.11 Low Power Mode Description from Outside (No Interaction), to Inside (full interaction)

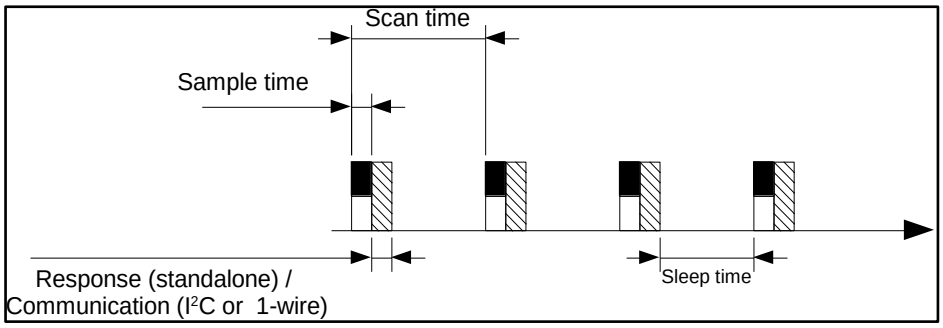


Figure 4.12 Sample-, Scan-, Sleep- and Communication Time Diagram



Downloaded from Arrow.com.

## 4.3 ProxSense® Sensitivity

The measurement circuitry uses a temperature stable internal sample capacitor ($C_S$) and internal regulated voltage ($V_{REG}$). Internal regulation provides for more accurate measurements over temperature variation.

The Automatic Tuning Implementation (ATI) is a sophisticated technology implemented on the ProxSense® series devices. It allows for optimal performance of the devices for a wide range of sense electrode capacitances, without modification or addition of external components. The ATI functionality ensures that sensor sensitivity is not affected by external influences such as temperate, parasitic capacitance and ground reference changes.

The ATI process adjusts three values (Coarse multiplier, Fine multiplier, Compensation) using two parameters (ATI base and ATI target) as inputs. An 8-bit compensation value ensures that an accurate target is reached. The base value influences the overall sensitivity of the channel and establishes a base count from where the ATI algorithm starts executing. A rough estimation of sensitivity can be calculated as:

$$Sensitivity \propto \frac{Target}{Base}$$

As seen from this equation, the sensitivity can be increased by either increasing the Target value or decreasing the Base value. A lower base value will typically result in lower multipliers and more compensation would be required. It should, however, be noted that a higher sensitivity will yield a higher noise susceptibility.

## 4.4 Applicability

All specifications, except where specifically mentioned otherwise, provided by this datasheet are applicable to the following ranges:

> IQS211A Temperature: -20ºC to +85ºC

> IQS211B Temperature: -40ºC to +85ºC

> Supply voltage ($V_{DDHI}$): 1.764V to 3.6V

Copyright © Azoteq 2025
All Rights Reserved


Downloaded from Arrow.com.

# 5 Details on User Configurable Options

## 5.1.1 Bank 0: Sensitivity and Scan Time Adjustments

| Bank0: bit 7:6 | Base Value (Sensitivity Multiplier in Partial ATI mode) |
|---|---|

See Proxsense® sensitivity.

Changing the base value enables the designer to adjust sensitivity. Lower base values will increase sensitivity and are recommended for systems with a high SNR ratio. Higher base values will prevent noise from being amplified but will result in less sensitivity.

With **Bank4: bit 2** set (partial ATI), the area of operation may be fixed to a certain extent. This is ideal for stationary applications where a specific type of trigger is expected.

With **Bank4: bit 0** set (auto-activation P>7), partial ATI must be enabled to ensure the desired results. With the "Sensitivity Multiplier" fixed, the P value will indicate whether a certain threshold has been crossed at power-up.

| Bank0: bit 5:4 | IDLE (proximity) / ACTIVE (touch) scan time |
|---|---|

Select an IDLE / ACTIVE combination scan time to achieve the desired response with target power consumption in mind.

| Bank0: bit 3 | Prox wake-up direction |
|---|---|

Active direction – only go to IDLE (proximity) scan time when an actual proximity event occurs.

Both directions – go to IDLE (proximity) scan time when a proximity event occurs or when a significant environment change occurs. This mode will enable quick touch response in a dynamic environment

As example, when sensing pad used on the wrist and the pad is covered for an extended time – the touch time-out occurs, and the sensor may be calibrated or not for the new "covered" environment (depending on the signal size). When the sensor pad is un-covered again, the "active direction" option causes a slow recovery from the situation while the "both directions" option causes an almost immediate recovery.

*Known issue: When selecting "Both directions", the sensor pad is covered, a time-out occurs, and the sensor is recalibrated (auto re-ATI) then a fault condition occurs. In this condition the sensor will use an outdated LTA reference for lower-power mode. This prevents the sensor from properly entering low power mode and power consumption will be as chosen for "idle" mode and not "low power / sleep" mode

| Bank0: bit 2:0 | SLEEP (no proximity) low power scan time |
|---|---|

Select a SLEEP scan time to determine the most significant power consumption figure of the device.

## 5.1.2 Bank 1: Threshold Adjustments

| Bank1: bit 7 | Touch late release (50% of touch threshold) |
|---|---|

This option will enable a user interface where activation would occur as usual, but the deactivation will occur at a relaxed threshold. It will therefore counter unwanted false releases. This option is ideal for handheld devices that will be active with a typical "grab" action but will not release when the grip on the device is relaxed.

Copyright © Azoteq 2025
All Rights Reserved


Downloaded from Arrow.com.

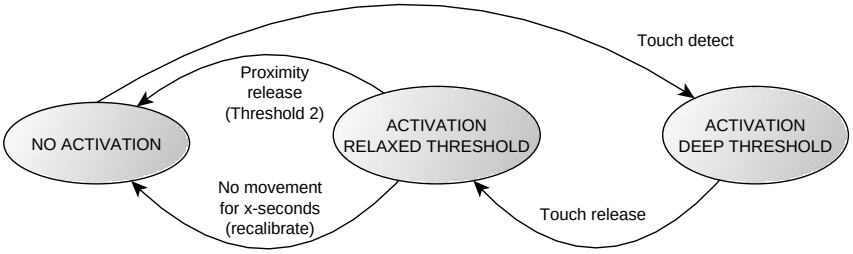


Figure 5.1 State Diagram of Touch Late Release Interface

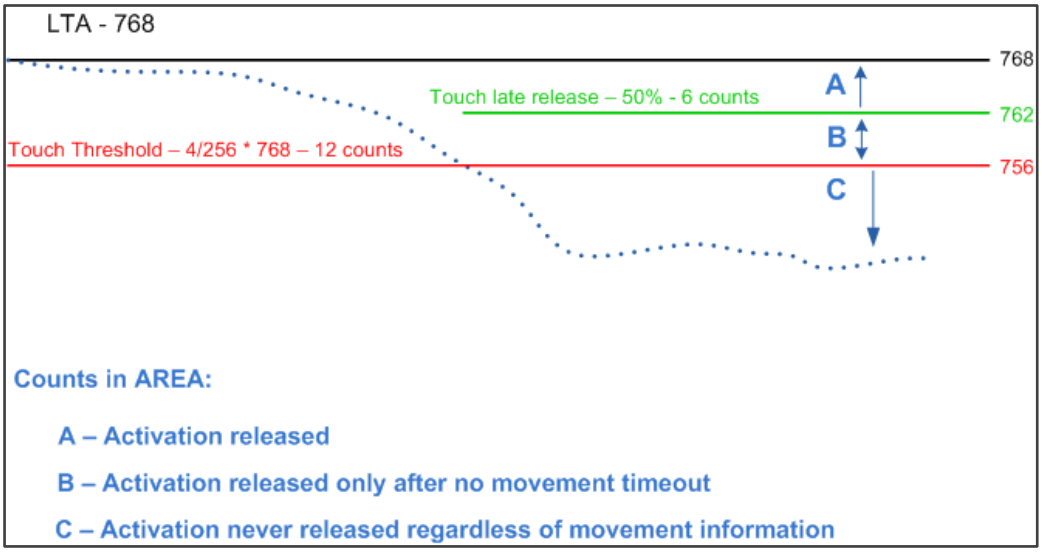


Figure 5.2 Touch Late Release Example

| Bank1: bit 6:5 | Proximity threshold (delta counts from LTA) |
|---|---|

The proximity threshold may be chosen to halt the filters that allow for temperature drift and other environmental effects. Choose a low value in order to increase the trigger distance for slow proximity activations. Choose a high value if the device and/or sensing electrode overlay is in a highly variable temperature environment. A high value is also recommended for touch button implementations with the IQS211A/B. This threshold will not trigger any of the output signals in most of the user interface options. The result of this threshold becomes an output in the “Proximity and touch” user interface option, where movement is only operating in the background.

| Bank1: bit 4:2 | Touch threshold (delta percentage from LTA) |
|---|---|

The touch threshold is the highly variable threshold that will determine the triggering of the activation output. This threshold may be chosen for various proximity trigger distances (low values 1 to 7) including a few settings that allow for the implementation of a touch button (high values 8 to 90)

Proximity levels (1 -7) are debounced (x2), resulting in a slower wakeup from sleep mode (low power scan time x2)

Touch levels (8 -90) are un-debounced, resulting in a quick wake-up from sleep mode (low power scan time x1)

Copyright © Azoteq 2025
All Rights Reserved


Downloaded from Arrow.com.

| Bank1: bit 1:0 | Movement threshold (delta counts from movement average) |
|---|---|

The movement threshold is chosen according to the dynamic response longed for, but also according to the signal-to-noise ratio of the system. Battery powered applications generally deliver much higher SNR values, allowing for lower movement thresholds.

### 5.1.3 Bank 2: Timer, Output Type and User Interface Adjustment

| Bank2: bit 7:5 | Reseed after no movement timer |
|---|---|

Depending on the user interface chosen, the activation output will clear when no movement is detected for the period selected here. This feature enables long-term detection in interactive applications while eliminating the risk of a device becoming stuck when placed on an inanimate object.

| Bank2: bit 4:3 | Movement output type |
|---|---|

The movement output is a secondary output (normally IO2 pin) that may be used as the main output or supporting output. This output may be altered to suit the requirements of various applications. When user interface of "**IO1:** Movement; **IO2:** Input" is selected this output will be at the IO1 pin.

**'00'** – The default pulse frequency modulated (PFM) signal indicates intensity of movement by the density of pulses. This is a relatively slow output that may trigger occasional interrupts on the master side. See Figure 5.3. Most intense detectable movements are indicated by active low pulses with 10ms width (20ms period). Saturated movement intensity is indicated by a constant low.

**'01'** – The pulse width modulation (PWM) option is ideal for driving analogue loads. This signal runs at 1 kHz and the duty cycle is adapted according to the movement intensity.

**'10'** – The movement latched option triggers the output as soon as any movement is detected. The output only clears when no movement is sensed for the time defined in Bank2: bit 7:5.

**'11'** – The same PFM-type output as in the '00' setting, but here the output will only become active once the activation threshold is reached.

'00' – PFM (pulse frequency modulation)

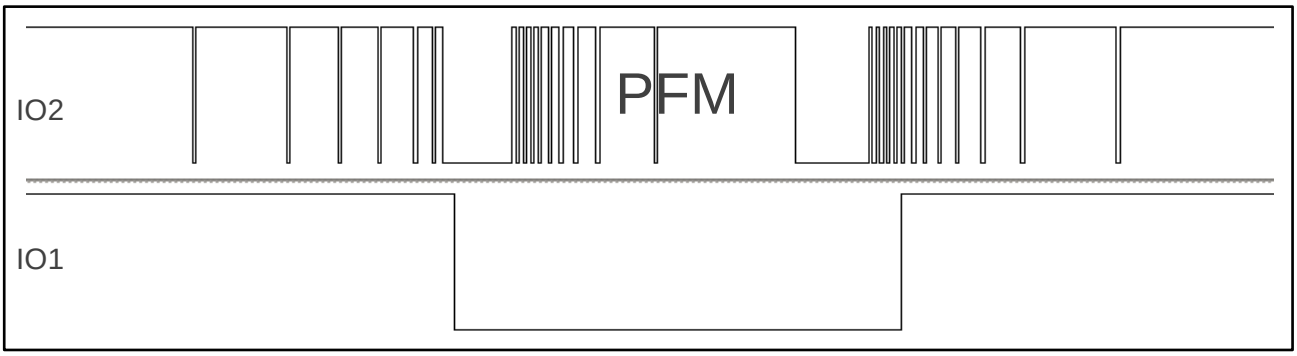


Figure 5.3 Movement (PFM) and Activation Output



Downloaded from Arrow.com.

’01’ – PWM

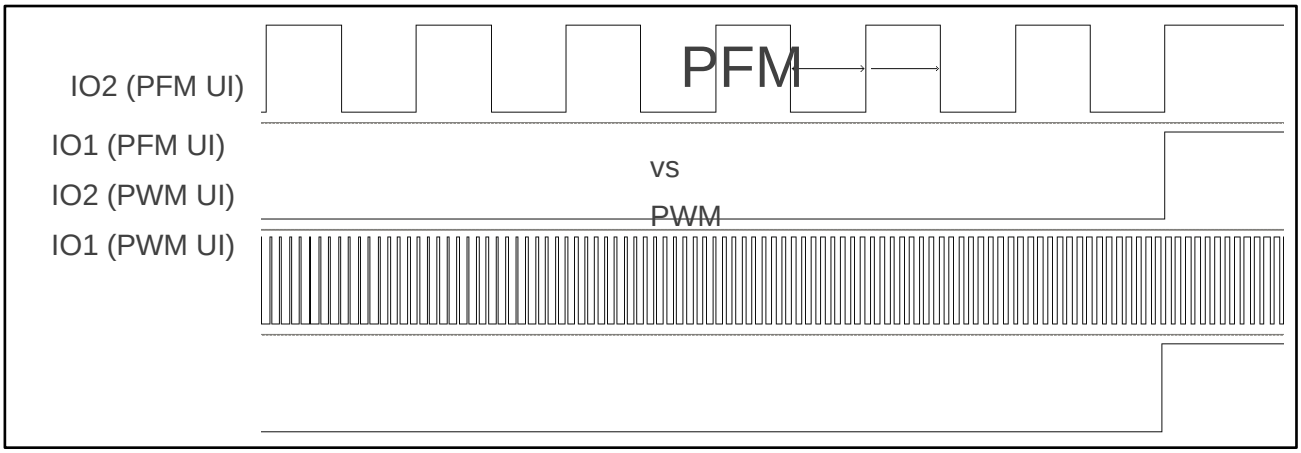


Figure 5.4 PFM Movement Output (TOP: 15ms Period Minimum) Compared with PWM Movement Output (BOTTOM: 1ms period)

‘10’ – Latched (forces output for duration of timer)

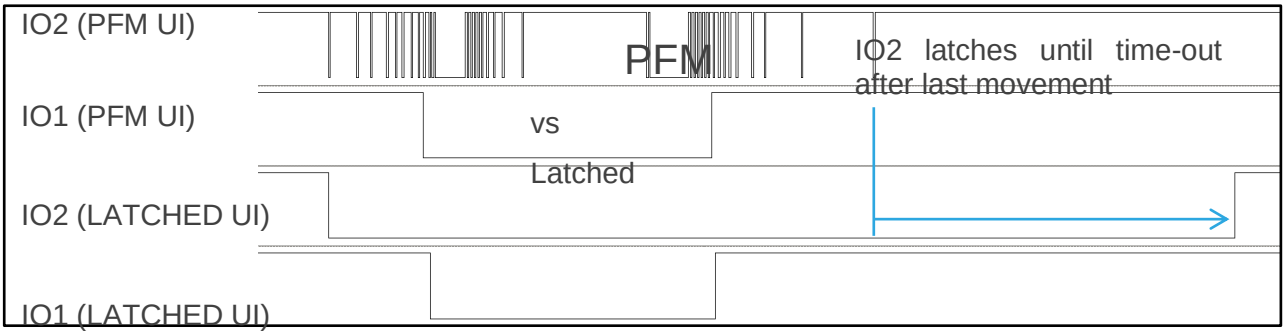


Figure 5.5 PFM Movement Output (TOP) Compared with Latched Movement Output (BOTTOM). Movement Output is Forced by First Movement

‘11’ – PWM (only active during activation)

| **Bank2: bit 2:0** | **User interface selection** |
|---|---|

Follow the links in the OTP summary for information on the various options.

### 5.1.4 Bank 3: VREG Damping, Sample Filter, Input Control and Output PWM

| **Bank3: bit 3** | **VREG damping** |
|---|---|

With this option enabled, be sure to follow the schematic in Figure 2.3 for TSOT23-6 or Figure *2.5* for WLCSP-8.

Current consumption is optimized through minimising processor awake time. With the damping option enabled, the VREG stabilisation time is significantly decreased, effectively optimizing processor wake time. In low µA power modes, this has a significant effect.

| **Bank3: bit 2** | **AC filter increase** |
|---|---|

With the AC filter increase enabled, the reaction time slows with more rapid changes being filtered out. This option is ideal for a system connected to a power supply with increased noise

Copyright © Azoteq 2025
All Rights Reserved


Downloaded from Arrow.com.

| Bank3: bit 1 | Activation output with input reseed & reset (halt charge) feature |
|---|---|

Extended IO1 definition: “000” Activation & Movement UI / “001” Movement latch output (forced) & Movement UI

With digital outputs enabled the IO1 pin has the option of being an input to “halt charge” / “reseed”. A short pulse (t > 15ms, t < 25ms) will initiate a reseed action (LTA = counts – 8) and a longer pulse (t > 50ms) will enable a lower power mode without sensing. The IQS211A/B will reset after the longer pulse is released (after a “halt charge” the IC will reset).

| Bank3: bit 0 | Multifunction Bit (applies only to certain UIs) |
|---|---|

Output definition: “000” Activation & Movement UI:

The IO1 pin normally only triggering with crossing of the threshold can be configured to output the depth of activation in PWM data. This is ideal for interpreting the specific activation level with a master, or for simply indicating the activation level on an analogue load.

Please note that when enabling this option, the PWM option on the **IO2** pin will be disabled (**Bank2: bit 4:3** option **‘01’** will be the same as **‘00’**)

Input definition: “010” Movement & Input UI:

By selecting the UI with the **IO2** pin defined as an input, this configuration bit will enable the choice of input between the following

‘0’ – The halt charge & reseed option as defined above or

‘1’ – Reduce movement sensitivity for applications that may switch between battery usage and more noisy power supplies for charging and back-up power.

### 5.1.5 Bank 4: Partial ATI, ATI Target and Power-on Detection

| Bank4: bit 3 | Partial ATI |
|---|---|

Partial ATI may be selected to limit the automatic tuning range of the sensor. This may give more predictable results, especially when the sensor tends to calibrate close to the edges by automatically choosing a certain sensitivity multiplier value. Set this bit and select a specific sensitivity multiplier value in **Base Value (Sensitivity Multiplier in Partial ATI mode).** A lower sensitivity multiplier value is recommended for light capacitive loads, while higher values for large capacitive loads.

Set this bit if the auto-activation at power-up bit is set **(Bank4: bit 0)**. By setting this bit, the auto activation “threshold” is chosen by selecting a sensitivity multiplier value **Base Value (Sensitivity Multiplier in Partial ATI mode)**. A lower sensitivity multiplier value will result in a sensitive threshold, while higher values will give a less sensitive threshold.

| Bank4: bit 2 | Auto Activation at power-up when P>7 (absolute capacitance detection method, partial ATI must be enabled, select sensitivity with the “Sensitivity Multiplier”) |
|---|---|

With **(Bank4: bit 3)** set this option allows for absolute capacitance detection at power-up. Use this in devices that require a threshold decision at power-up without the calibration step. Select a “threshold” by adjusting the sensitivity multiplier value in **Base Value (Sensitivity Multiplier in Partial ATI mode)**. A lower sensitivity multiplier value will result in a sensitive “threshold”, while higher values will give a less sensitive “threshold”.

| Bank4: bit 1:0 | ATI target |
|---|---|

Copyright © Azoteq 2025
All Rights Reserved


Downloaded from Arrow.com.

The default target of 768 ensures good performance in various environments. Set this bit when increased activation distance and movement sensitivity is required.

The target of 1200 is recommended for battery powered devices where high SNR ratios are expected.

Targets of 384 and 192 are for touch applications where power consumption and processor wake time are to be optimized.

Movement features are most pronounced and effective when using a high target.

Copyright © Azoteq 2025
All Rights Reserved


Downloaded from Arrow.com.

# 6 I²C Interface

*NOTE*

I²C mode can only be used in devices that are pre-configured to function in this mode.

Typical choices for pre-configured devices are:

Table 6.1 Typical Pre-configured Parts

| Part number | Main Features |
|---|---|
| IQS211B 00050000 TSR/CSR/DNR | No wake-up<br>Suitable for bus usage |
| IQS211B 00070000 TSR/CSR/DNR | Includes wake-up<br>Not suitable for bus usage<br>Includes reset indication<br>Configured for RDY toggle on SCL |

*Please note: During normal operation, the IQS211 does conversions and enters sleep mode for a pre-determined time set by the sample period bit. The IQS211 can enable wake-up, which allows the IQS211 to wake up from sleep mode for any activity on the I2C bus and conversions will start immediately. Enabling wake-up will increase the power consumption and lead to an inconsistent sampling rate.*

## 6.1 I²C Address

The IQS211A/B I²C address is fixed at 0x47

## 6.2 I²C Read

To read from the device a *current address read* can be performed. This assumes that the address-command is already setup as desired.

**Current Address Read**

| Start | Control byte | | Data n | | Data n+1 | | Stop |
|---|---|---|---|---|---|---|---|
| **S** | **Addr + READ** | **ACK** | | **ACK** | | **NACK** | **S** |

Figure 6.1 Current Address Read

If the address-command must first be specified, then a *random read* must be performed. In this case, a WRITE is initially performed to setup the address-command, and then a repeated start is used to initiate the READ section.

**Random Read**

| Start | Control byte | | Address-command | | Start | Control byte | | Data n | | Stop |
|---|---|---|---|---|---|---|---|---|---|---|
| **S** | **Addr + WRITE** | **ACK** | | **ACK** | **S** | **Addr + READ** | **ACK** | | **NACK** | **S** |

Figure 6.2 Random Read

*NOTE*

The second start-bit shown after the Address command and ACK-bit can be viewed as a repeated start. If there is a stop-bit before the second start-bit, the user will not be able to communicate with the device as the IQS211A/IQS211B does not have a workaround for the stop-bit.

## 6.3 I²C Write

To write settings to the device a *Data Write* is performed. Here the Address-Command is always required, followed by the relevant data bytes to write to the device.

Copyright © Azoteq 2025
All Rights Reserved


Downloaded from Arrow.com.

**Data Write**

| Start | Control byte | | Address-Command | | Data n | | Data n+1 | | Stop |
|---|---|---|---|---|---|---|---|---|---|
| **S** | **Addr + WRITE** | **ACK** | | **ACK** | | **ACK** | | **ACK** | **S** |

Figure 6.3 I²C Data Write

## 6.4 I²C Operation

The IQS211A/B may be configured as an I²C device through the user interface selection in Bank2: bits 2:0:

| Bank2: bits 2:0 | Description |
|---|---|
| 101 | Normal polling for use on I²C bus |
| 110 | I²C polling with signature pulses at power-up / reset. The clock also has a RDY pulse incorporated before each possible communications window. |
| 111 | The clock also has a RDY pulse incorporated before each possible communications window. The IC will wake-up on I²C bus pin changes. |

### 6.4.1 Normal I²C Polling (101)

The IQS211A/B prioritizes doing capacitive conversions. With standard polling the IQS211A/B will do a conversion and thereafter open the window of maximum 20ms for I2C communications. If the microprocessor sends the correct address in this window, the IQS211A/B will respond with an ACK. When communications are successful, the window will close, and conversions will continue.

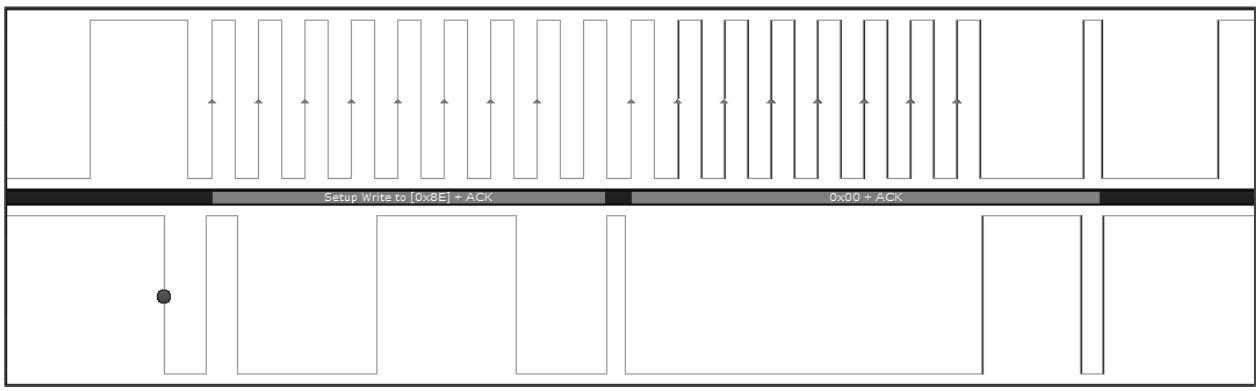


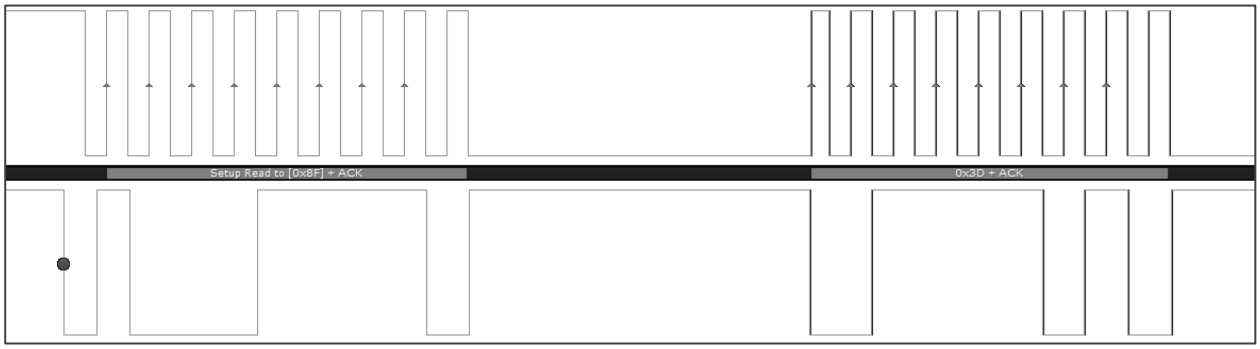




Downloaded from Arrow.com.

Figure 6.4 Typical Polling Example of IQS211A/B. The Sequence Addresses Register 0x00 (top) and Reads Data (0x3D) from Register 0x00 (bottom)

### 6.4.2 I²C Polling with Reset Indication & RDY (110)

This mode is based on I²C, but not I²C compatible. This mode is aimed at solutions that need the flexibility of the register settings but require standalone operation during run-time.

The reset indication can be identified by a toggle on the SDA (IO2) line, followed by a toggle on the SCL(IO1) line at power-on or reset. The reset indication shows that the IQS211 has reset when the MCU did not. Standalone outputs are therefore not active and needs to be re-configured via I²C.

After a toggle on the SDA (IO2) line, the MCU can safely assume that IQS211 is now in I2C mode and then toggle the IQS211 again, to confirm that a reset has occurred. The reset indication is valuable for a mode switch between I2C and standalone mode.

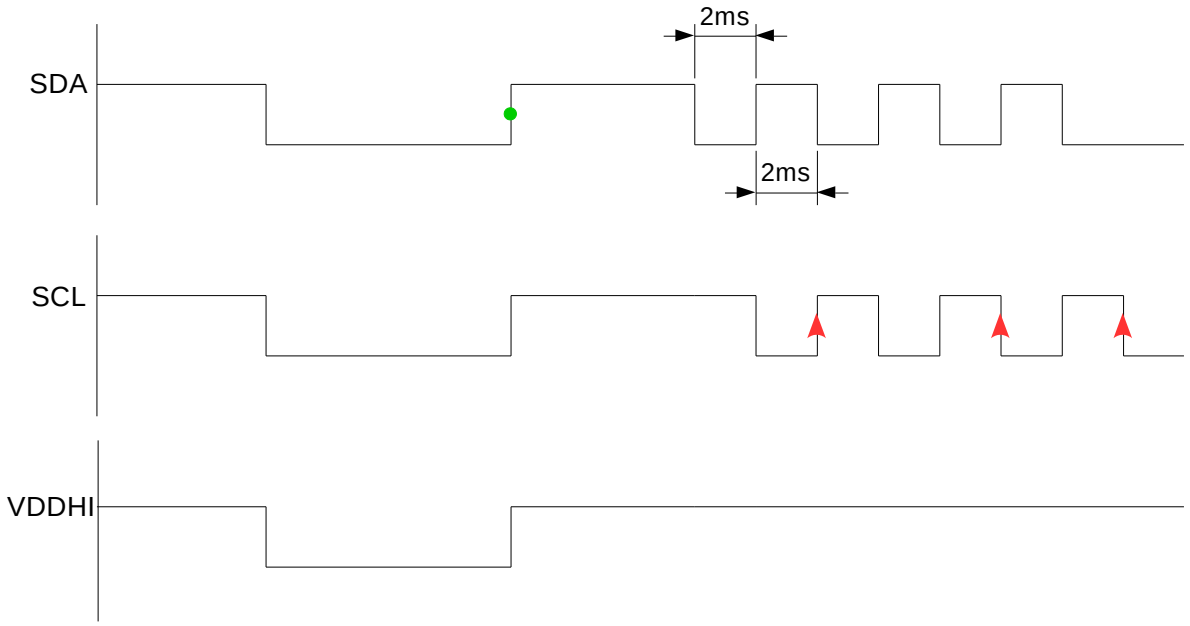


Figure 6.5 Reset Indication Timing

After changing the settings and more particularly the user interface option, the device will start operating in the required mode.

In this mode the IQS211A/B is not recommended to share a bus with other devices. Normal polling may be used, but the master may also monitor the I²C clock line as an indication from the IQS211A/B that the communications window is open. The clock line therefore serves as a ready line.

Copyright © Azoteq 2025
All Rights Reserved


Downloaded from Arrow.com.

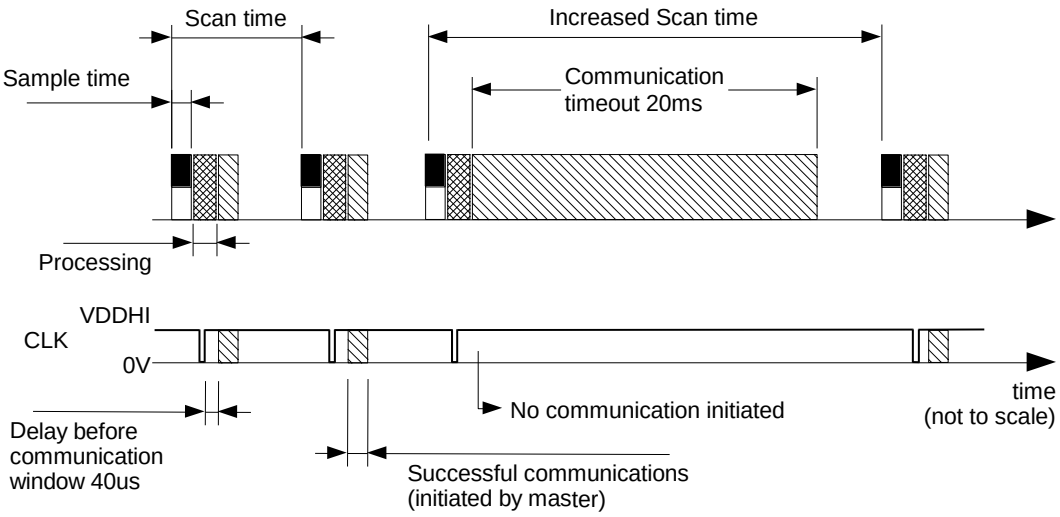


Figure 6.6 How to Use RDY Signal on Clock Line

Communications may be initiated at any time from clock low-to-high transition plus 40us until 20ms thereafter, when the communications window closes. Polling should be done within this time window to communicate with the device. If now communications are done the window will time out. If communications are completed with a stop command, the window will close, and sampling will continue after a sleep period.

After changing register 0xC7 bits 2:0 (memory map – user interface selection) in this mode, it is required to read any other register in order to activate the chosen user interface (such as a standalone mode) before sending a stop command.

### 6.4.3 I²C Polling with RDY on Clock and Wake-up on Pin Change (111)

This I²C mode is aimed at applications that require the flexibility of I²C settings but requires wake-up functionality from the master side. A ready indication is also given on the clock line to enable the master to efficiently handle the available communications window.

The wake-up on pin change prevents this configuration from being efficiently used along with other devices on the bus.

## 6.5 I²C Flow

### 6.5.1 I²C Usage from Start-up

> Power on Reset

> Wait $t_{testmode}$ to avoid test mode entry

> Wait $t_{ATI}$

> Start communication in desired mode as described in section 6.4.



Downloaded from Arrow.com.

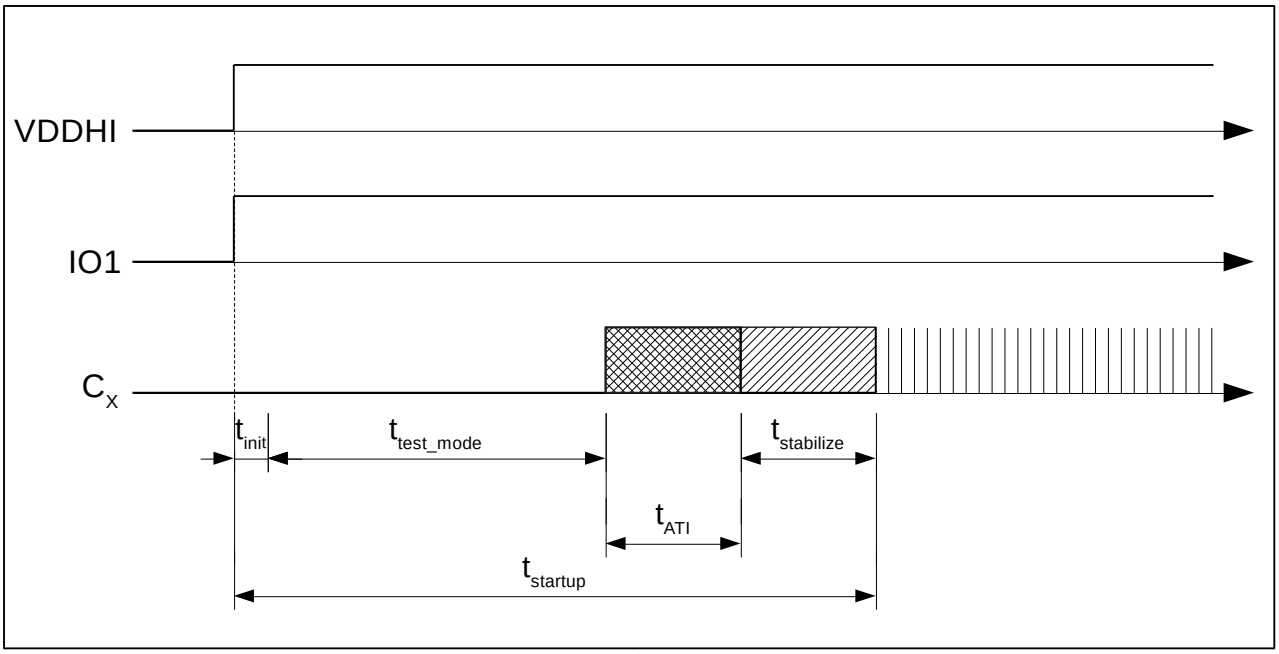


Figure 6.7 Timing Specification During Power-on

Table 6.2 Various IQS211 Characteristics

| DESCRIPTION | TYP | UNIT |
|---|---|---|
| $t_{init}$ | 730 | µs |
| $t_{test_mode}$ | 15 | ms |
| $t_{ATI}$ | 180 | ms |
| $t_{stabilize}$ (IDLE time = 9ms) | 9*16 | ms |
| $t_{stabilize}$ (IDLE time = 32ms) | 32*16 | ms |
| $t_{startup}$ (IDLE time = 9ms) | 340 | ms |
| $t_{startup}$ (IDLE time = 32ms) | 708 | ms |

### 6.5.2 When to Redo ATI in I2C mode

> It is recommended to enable auto-ATI

> Updating settings in I2C mode may cause a condition where the device remains in touch for an extended time due to the updated settings. When updating most settings, it is recommended to force ATI via PROX_SETTINGS0

Copyright © Azoteq 2025
All Rights Reserved


Downloaded from Arrow.com.

# 7 Specifications

## 7.1 Absolute Maximum Ratings

The following absolute maximum parameters are specified for the device:

*Exceeding these maximum specifications may cause damage to the device.*

| | |
|---|---|
| > Operating temperature | -20°C to 85°C (IQS211A) |
| > -40°C to 85°C (IQS211B) | |
| > Supply Voltage (VDDHI – VSS) | 3.6V |
| > Maximum pin voltage | VDDHI + 0.5V (may not exceed VDDHI max) |
| > Maximum continuous current (for specific Pins) | 10mA |
| > Minimum pin voltage | VSS – 0.5V |
| > Minimum power-on slope | 100V/s |
| > ESD protection | ±8kV (Human body model) |
| > Package Moisture Sensitivity Level (MSL) | 1 |

Table 7.1 IQS211A/B General Operating Conditions

| DESCRIPTION | Conditions | PARAMETER | MIN | TYP | MAX | UNIT |
|---|---|---|---|---|---|---|
| Supply voltage | | $V_{DDHI}$ | 1.764 | 3.3 | 3.6 | V |
| Internal regulator output | $1.8 \leq V_{DDHI} \leq 3.6$ | $V_{REG}$ | 1.62 | 1.7 | 1.79 | V |
| Default Operating Current | 3.3V, Scan time = 9 | $I_{IQS211DP}$ | | 77 | 88 | µA |
| Low Power Example Setting 1* | 3.3V, Scan time =160 | $I_{IQS211LP160}$ | | | 2** | µA |
| Cx pin capacitance | $1.8 \leq V_{DDHI} \leq 3.6$ | $C_{CxLoad}$ | | | 120 | pF |

*Scan time in ms

**Defined for low target counts (192)

Table 7.2 Start-up and Shut-down Slope Characteristics

| DESCRIPTION | Conditions | PARAMETER | MIN | MAX | UNIT |
|---|---|---|---|---|---|
| Power On Reset | $V_{DDHI}$ Slope ≥ 100V/s[4] | $POR_{VDDHI}$ | 0.3[5] | 1.7 | V |
| VDDHI Brown Out Detect | $V_{DDHI}$ Slope ≥ 100V/s[1] | $BOD_{VDDHI}$ | N/A | 1.7 | V |
| VREG Brown Out Detect | $V_{DDHI}$ Slope ≥ 100V/s[1] | $BOD_{VREG}$ | N/A | 1.58[6] | V |

[4]Applicable to full "operating temperature" range

[5]For a power cycle, ensure lowering VDDHI below the minimum value before ramping VDDHI past the maximum POR value

[6]Figure 2.2 Capacitors C1 & C3 should be chosen to comply with this specification

Copyright © Azoteq 2025
All Rights Reserved


Downloaded from Arrow.com.

Table 7.3 Input Signal Response Characteristics (IO1/IO2)

| DESCRIPTION | MIN | TYP | MAX | UNIT |
|---|---|---|---|---|
| Reseed function | 15 | 20 | 25 | ms |
| Halt charge / Reduce sensitivity function | 50 | n/a | n/a | ms |

Table 7.4 Communications Timing Characteristics

| DESCRIPTION | MIN | TYP | MAX | UNIT |
|---|---|---|---|---|
| $t_{comms_timeout}$ | - | 20 | - | ms |

Table 7.5 Digital Input Trigger Levels

| DESCRIPTION | Conditions | PARAMETER | MIN | MAX | UNIT |
|---|---|---|---|---|---|
| All digital inputs | Full VDDHI range | Input low level voltage | 0.3 * VDDHI | n/a | V |
| All digital inputs | Full VDDHI range | Input high level voltage | n/a | 0.7 * VDDHI | V |

Copyright © Azoteq 2025
All Rights Reserved


Downloaded from Arrow.com.

# 8 Package information

## 8.1 TSOT23-6

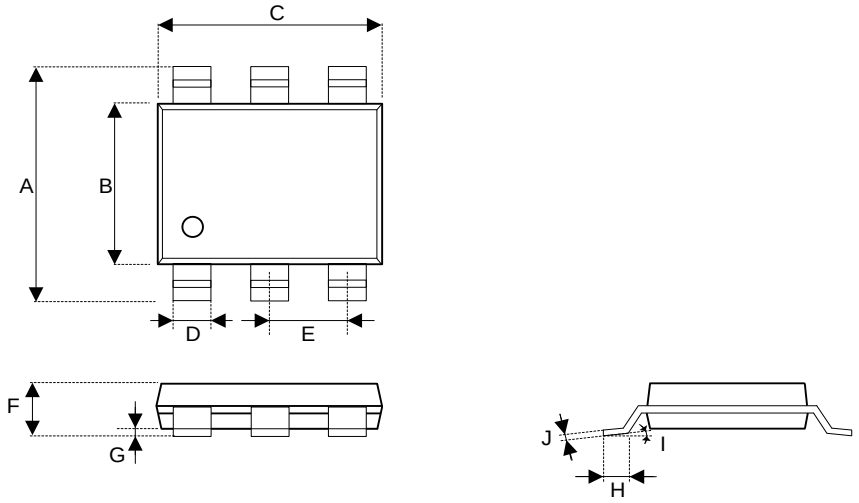


Figure 8.1 TSOT23-6 Packaging[7]

Table 8.1 TSOT23-6 Dimensions

| Dimension | Min (mm) | Max (mm) |
|---|---|---|
| A | 2.60 | 3.00 |
| B | 1.50 | 1.70 |
| C | 2.80 | 3.00 |
| D | 0.30 | 0.50 |
| E | 0.95 Basic | |
| F | 0.84 | 1.00 |
| G | 0.00 | 0.10 |
| H | 0.30 | 0.50 |
| I | 0° | 8° |
| J | 0.03 | 0.20 |
| | | |

[7] Drawing not on Scale

Copyright © Azoteq 2025
All Rights Reserved


Downloaded from Arrow.com.

## 8.2 WLCSP-8

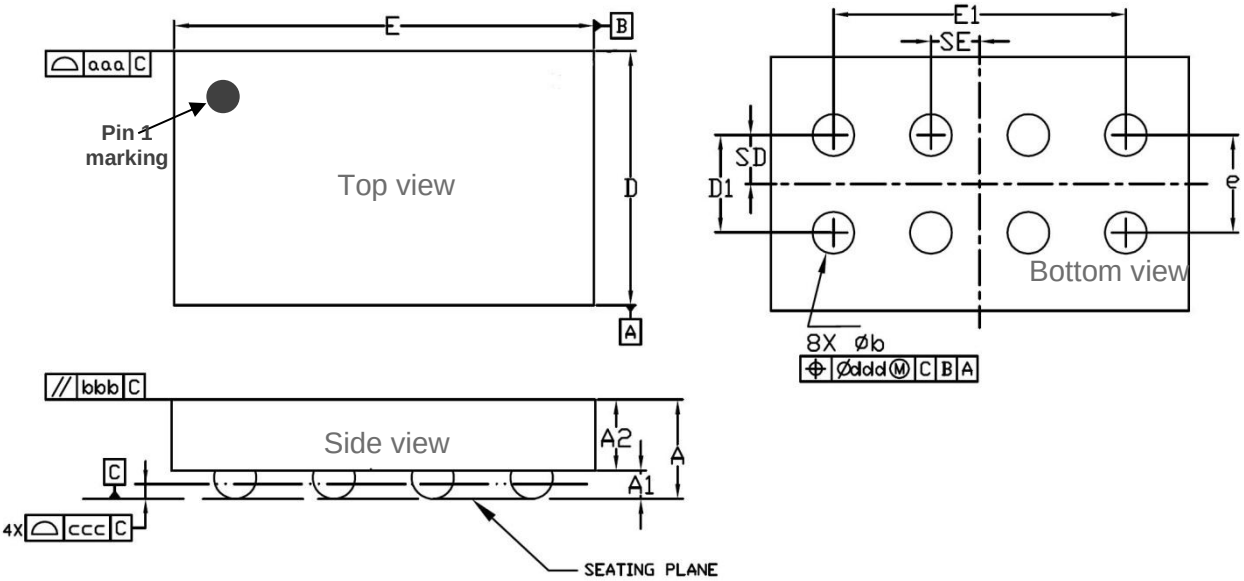


| Dimensional Ref. | | | |
|---|---|---|---|
| REF. | Min. | Nom. | Max. |
| A | 0.310 | 0.350 | 0.390 |
| A1 | 0.085 | 0.100 | 0.115 |
| A2 | 0.225 | 0.250 | 0.275 |
| D | 0.865 | 0.880 | 0.895 |
| E | 1.455 | 1.470 | 1.485 |
| D1 | 0.300 | 0.350 | 0.400 |
| E1 | 1.000 | 1.050 | 1.100 |
| b | 0.125 | 0.150 | 0.175 |
| e | 0.350 BSC | | |
| SD | 0.175 BSC | | |
| SE | 0.175 BSC | | |
| Tol. of Form&Position | | | |
| aaa | 0.10 | | |
| bbb | 0.10 | | |
| ccc | 0.05 | | |
| ddd | 0.05 | | |

Figure 8.2 IQS211A WLCSP-8 Dimensions (in mm)

Copyright © Azoteq 2025
All Rights Reserved


Downloaded from Arrow.com.

## 8.3 DFN-6

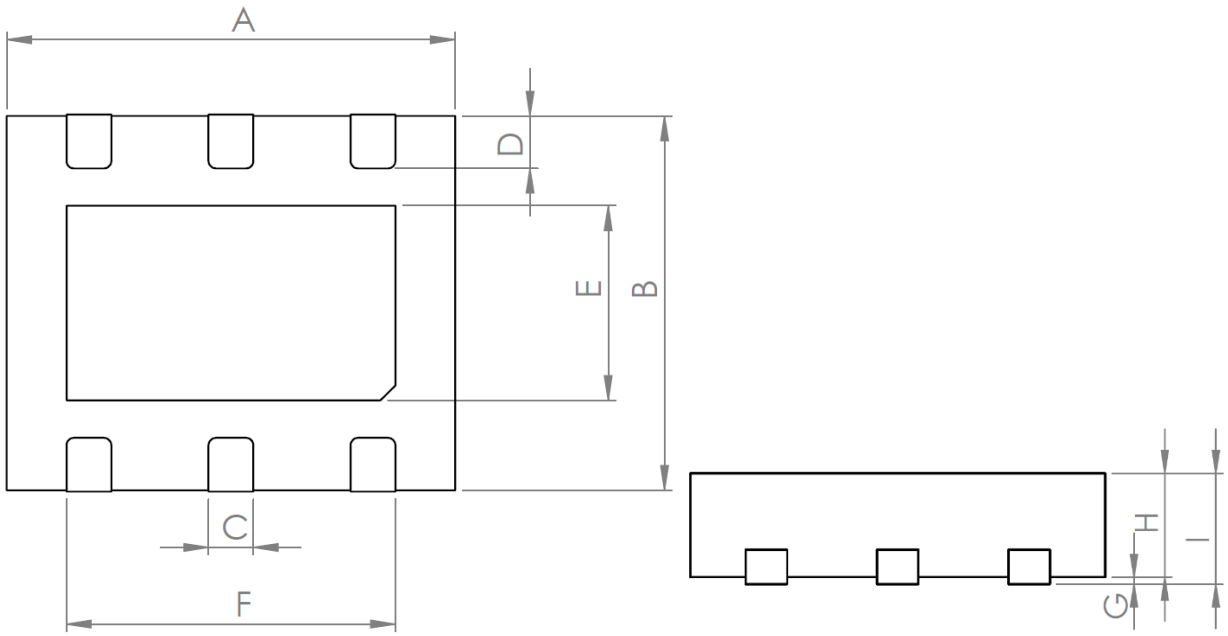


DFN-6 Packaging

DFN-6 Dimensions

| Dimension | Min | Max |
|---|---|---|
| A | 3.00mm | 3.00mm |
| B | 2.50mm | 2.50mm |
| C | 0.30mm | 0.30mm |
| D | 0.35mm | 0.35mm |
| E | 1.30mm | 1.30mm |
| F | 2.20mm | 2.20mm |
| G | 0.05mm | 0.05mm |
| H | 0.75mm | 0.75mm |
| I | 0.80mm | 0.80mm |

Copyright © Azoteq 2025
All Rights Reserved


Downloaded from Arrow.com.

## 8.4 MSL Level

**Moisture Sensitivity Level** (MSL) relates to the packaging and handling precautions for some semiconductors. The MSL is an electronic standard for the time period in which a moisture sensitive device can be exposed to ambient room conditions (approximately 30°C/85%RH see J-STD033C for more info) before reflow occur.

| Package | Level (duration) |
|---|---|
| TSOT23-6 | MSL 1 (Unlimited at ≤30 °C/85% RH)<br>Reflow profile peak temperature < 260 °C for < 30 seconds |
| WLCSP-8 | Non-encapsulated device – not moisture sensitive<br>Reflow profile peak temperature < 260 °C for < 30 seconds |
| DFN-6 | MSL 1 (Unlimited at ≤30 °C/85% RH)<br>Reflow profile peak temperature < 260 °C for < 30 seconds |

Copyright © Azoteq 2025
All Rights Reserved


Downloaded from Arrow.com.

# 9 Ordering and Part-number Information

## *9.1* Ordering Information

Please check stock availability with your local distributor.

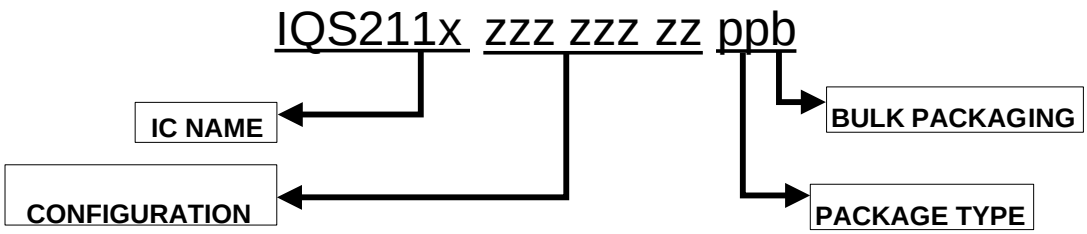


| | | | |
|---|---|---|---|
| **IC NAME** | IQS211A<br>IQS211B | =<br>= | Self-Capacitive Touch IC (manufacturer 1)<br>Self-Capacitive Touch IC (manufacturer 2) |
| **CONFIGURATION** | zzzz zzzz | =<br>=<br>=<br>=<br>= | IC configuration (hexadecimal)<br>**000 000 00** (default standalone)<br>**000 500 00** ($I^2C$ bus compatible)<br>**000 600 00** ($I^2C$ with RDY indication, not multi-device bus compatible)<br>Special MOQs apply for other configurations - Contact Azoteq |
| **PACKAGE TYPE** | TS<br>CS<br>DN | =<br>=<br>= | TSOT23-6 package<br>WLCSP-8 package<br>DFN-6 package (On special order only[1]) |
| **BULK PACKAGING** | R<br><br><br>MOQ | =<br>=<br>=<br>= | Reel<br>TSOT23-6 and WLCSP-8: 3000pcs/reel<br>DFN-6: 6000pcs/reel<br>1 reel (orders shipped as full reels) |

[1] Special order codes are subject to larger minimum order quantities, longer lead times and are non-cancelable, non-returnable.

Copyright © Azoteq 2025
All Rights Reserved


Downloaded from Arrow.com.

## 9.2 Device Marking – Top

### 9.2.1 TSOT23-6 Package

There are 2 marking versions for IQS211A:

Figure 9.1 IQS211A Engineer Version, Marked as 221A.

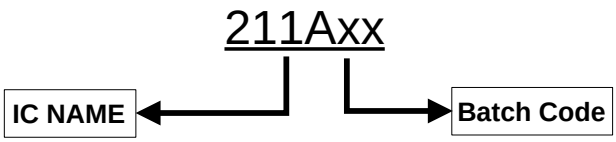


Figure 9.2 Production Version Marking of TSOT23-6 IQS211A.

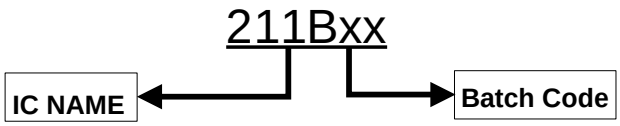


Figure 9.3 Production Version Marking of TSOT23-6 IQS211B.

| | | | |
|---|---|---|---|
| IC NAME | 211A ENG | = | IQS211A Engineering version |
| | 211A | = | IQS211A Production version |
| | 211B | = | IQS211B Alternate manufacturer of IQS211A |
| Batch Code | xx | = | AA to ZZ, then “aa” to “zz” |

### 9.2.2 WLCSP-8 Package

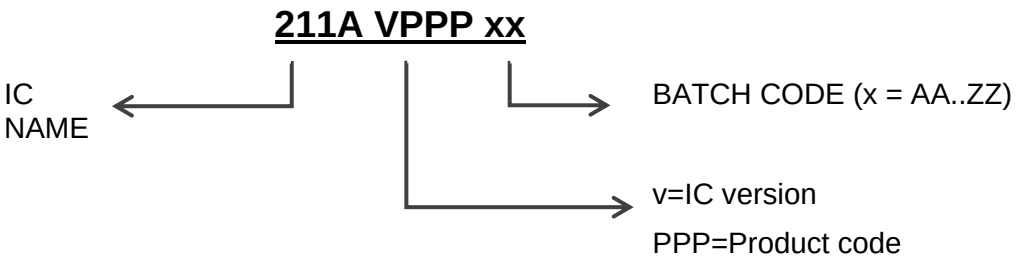


Figure 9.4 Product Version Marking of WLCSP IQS211A

Copyright © Azoteq 2025
All Rights Reserved


Downloaded from Arrow.com.

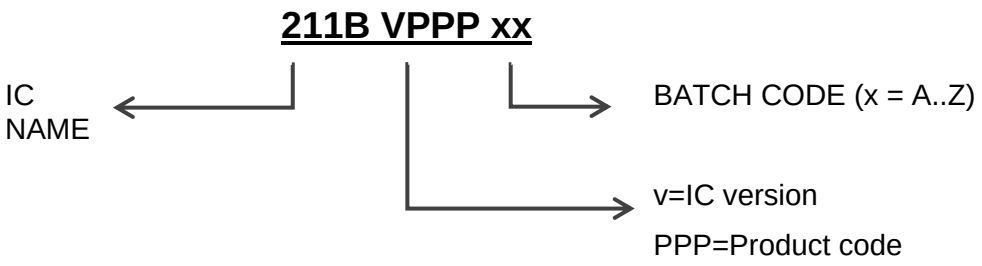


Figure 9.5 Product Version Marking of WLCSP IQS211B

### 9.2.3 DFN-6 Package

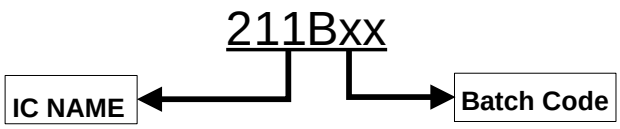


Figure 9.6 Production Version Marking of DFN-6 IQS211B.

| | | | |
|---|---|---|---|
| IC NAME | 211B | = | IQS211B |
| Batch Code | xx | = | AA to ZZ, then “aa” to “zz” |



Downloaded from Arrow.com.

## 9.3 Device Marking - Bottom

Some batches IQS211A will not have any bottom markings. These devices are configured after marking and may have variations in configuration – please refer to the reel label.

Other batches will display the version and unique product code on the chip on the bottom marking.

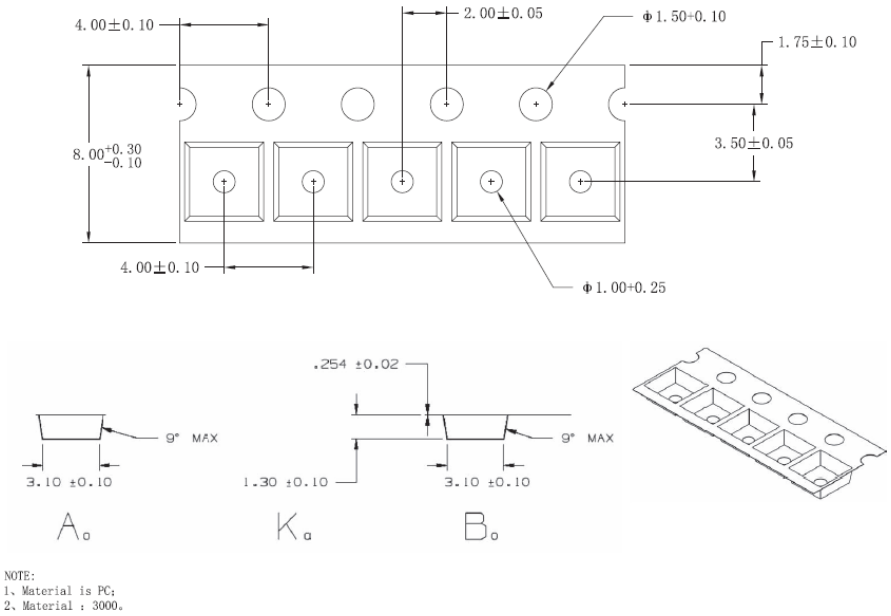


*Figure 9.7 TSOT23-6 T ape Specification*



Downloaded from Arrow.com.

## 9.4 Tape & Reel Specification

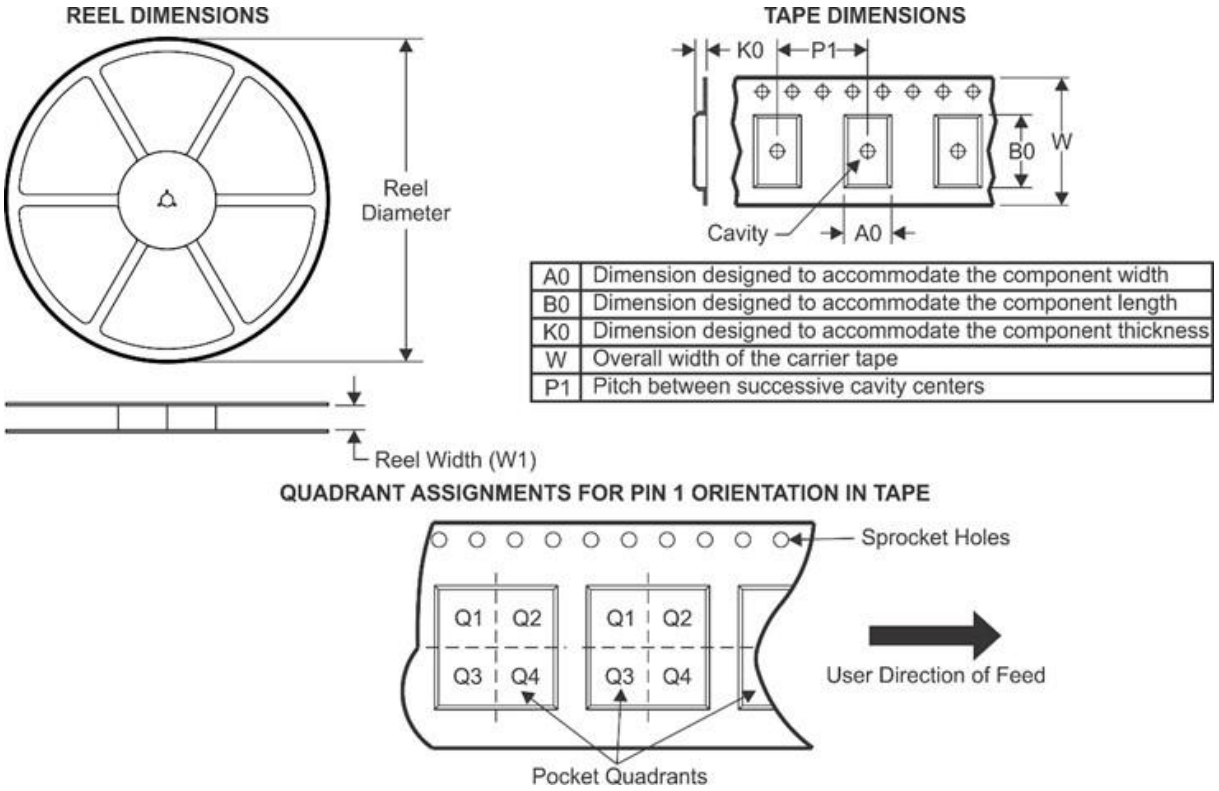


Figure 9.8: Tape and Reel Specification.

Table 9.1 Tape and Reel Dimensions

| Device | Package Type | Package Drawing | Pins | QTY per reel | Reel Diameter (mm) | Reel Width W1 (mm) | A0 (mm) | B0 (mm) | K0 (mm) | P1 (mm) | W (mm) | Pin1 Quadrant |
|---|---|---|---|---|---|---|---|---|---|---|---|---|
| IQS211ASzzzzzzzzTSR | TSOT23/6 | TSOT23-6 | 6 | 3000 | 178 | 9.5 | 3.1 | 3.1 | 1.3 | 4 | 8 | Q3 |
| IQS211BzzzzzzzzTSR | TSOT23/6 | TSOT23-6 | 6 | 3000 | 178 | 9.5 | 3.1 | 3.1 | 1.3 | 4 | 8 | Q3 |
| IQS211BzzzzzzzzCSR | WLCSP8 | WLCSP-8 | 8 | 3000 | 179 | 8.4 | 1 | 1.55 | 0.48 | 4 | 8 | Q3 |
| IQS211BzzzzzzzzDNR | DFN6 | DFN-6 | 6 | 6000 | 330 | 12.4 | 2.8 | 3.3 | 1.2 | 4 | 12 | Q1 |

Copyright © Azoteq 2025
All Rights Reserved


Downloaded from Arrow.com.

## Revision History

| Revision Number | Description | Date of issue |
|---|---|---|
| V0.9 | IQS211A preliminary datasheet | 23 November 2015 |
| V1.0 | First release | December 2015 |
| V1.01 | Updated Ordering information and Marking | December 2015 |
| V1.10 | Latch-up prevention details added | September 2016 |
| V1.2 | Temperature range updated | 28 September 2017 |
| V1.3 | Datasheet extended with relevant information | 28 February 2018 |
| V2.1 | IQS211A/B datasheet release<br>IQS211B information added<br>IQS211A WLCSP option added<br>IO1/IO2 output type defined<br>Wider voltage minimum defined (1.8V -2%)<br>Input low/high voltage levels adapted to cover both IQS211A and IQS211B | 7 December 2018 |
| V2.2 | IQS211A WLCSP ordering information added | 8 November 2019 |
| V2.3 | Updated LP Period multiplier from 16 to 4 | 4 February 2020 |
| V2.4 | Datasheet extended with relevant information:<br>> OTP table “wake-up in both directions” – known issue added and explained in section “Bank0: bit 3”<br>> OTP table “touch threshold” and “Touch threshold (delta percentage from LTA)”section updated to show which options are debounced causing a slower response<br>> Section 6 $I^2C$ information added and updated<br>> $I^2C$ register description added<br>> POR timing diagram added<br>> Reset indication timing diagram added | 20 August 2020 |
| V2.5 | Datasheet extended with DFN-6 package option. | |
| V2.6 | Tape and Reel Information Added | 27 September 2021 |
| V2.61 | Minor formatting and text changes<br>Maximum $C_x$ pin capacitance specified | 14 October 2021 |
| V2.62 | Section 3.1 updated to include DNR option | 5 January 2022 |
| V2.7 | Updated order codes section | 1 April 2025 |

Copyright © Azoteq 2025
All Rights Reserved


Downloaded from Arrow.com.

## Contact Information


| | South Africa (Headquarters) | China |
|---|---|---|
| **Physical Address** | 1 Bergsig Avenue<br>Paarl<br>7646<br>South Africa | Room 501A, Block A<br>T-Share International Centre<br>Taoyuan Road, Nanshan District<br>Shenzhen, Guangdong, PRC |
| **Tel** | +27 21 863 0033 | +86 755 8303 5294<br>ext 808 |
| **Email** | info@azoteq.com | info@azoteq.com |

| | USA | Taiwan |
|---|---|---|
| **Physical Address** | 7000 North Mopac Expressway<br>Suite 200<br>Austin<br>TX 78731<br>USA | Xintai 5th Road, Sec. 1<br>No. 99, 9F-12C<br>Xizhi District<br>221001 New Taipei City<br>Taiwan |
| **Tel** | +1 512 538 1995 | +886 932 219 444 |
| **Email** | info@azoteq.com | info@azoteq.com |


*Visit www.azoteq.com*

*for a list of distributors and worldwide representation.*

Patents as listed on www.azoteq.com/patents-trademarks/ may relate to the device or usage of the device.

Azoteq®, Crystal Driver®, IQ Switch®, ProxSense®, ProxFusion®, LightSense™, SwipeSwitch™, Dycal™, TriggerMax™, WearMax™, and the logo are trademarks of Azoteq.

The information in this Datasheet is believed to be accurate at the time of publication. Azoteq uses reasonable effort to maintain the information up-to-date and accurate, but does not warrant the accuracy, completeness or reliability of the information contained herein. All content and information are provided on an "as is" basis only, without any representations or warranties, express or implied, of any kind, including representations about the suitability of these products or information for any purpose. Azoteq disclaims all warranties and conditions with regard to these products and information, including but not limited to all implied warranties and conditions of merchantability, fitness for a particular purpose, title and non-infringement of any third party intellectual property rights. Azoteq assumes no liability for any damages or injury arising from any use of the information or the product or caused by, without limitation, failure of performance, error, omission, interruption, defect, delay in operation or transmission, even if Azoteq has been advised of the possibility of such damages. The applications mentioned herein are used solely for the purpose of illustration and Azoteq makes no warranty or representation that such applications will be suitable without further modification, nor recommends the use of its products for application that may present a risk to human life due to malfunction or otherwise. Azoteq products are not authorized for use as critical components in life support devices or systems. No licenses to patents are granted, implicitly, express or implied, by estoppel or otherwise, under any intellectual property rights. In the event that any of the abovementioned limitations or exclusions does not apply, it is agreed that Azoteq's total liability for all losses, damages and causes of action (in contract, tort (including without limitation, negligence) or otherwise) will not exceed the amount already paid by the customer for the products. Azoteq reserves the right to alter its products, to make corrections, deletions, modifications, enhancements, improvements and other changes to the content and information, its products, programs and services at any time or to move or discontinue any contents, products, programs or services without prior notification. For the most up-to-date information and binding Terms and Conditions please refer to www.azoteq.com.



Downloaded from Arrow.com.