C

board drillings

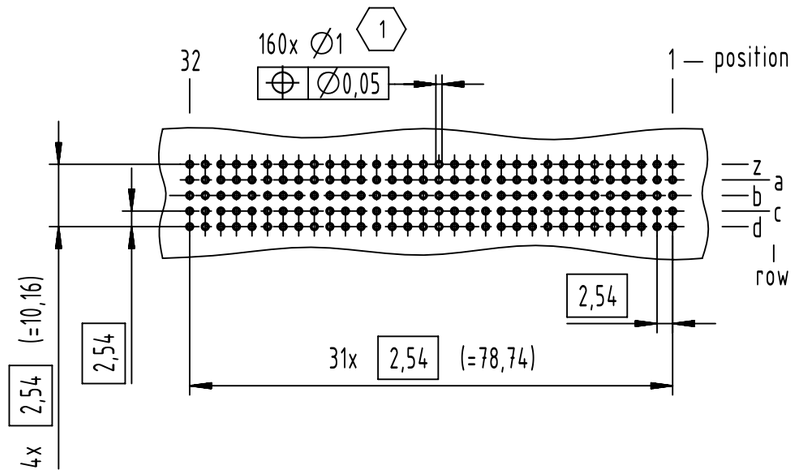

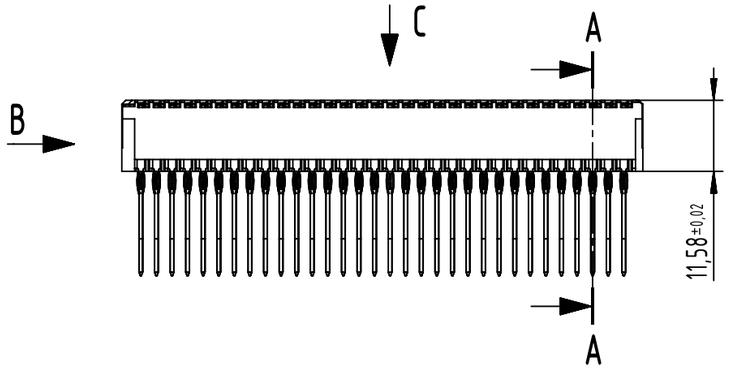

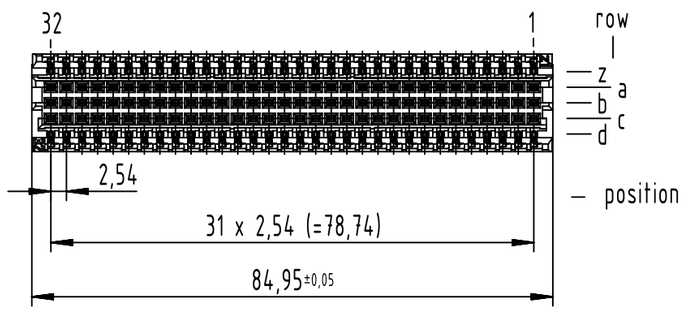

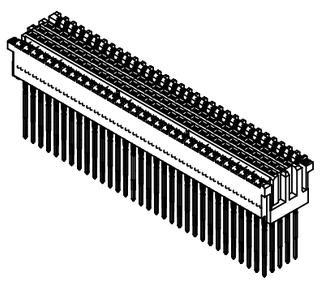

A-A (2:1)

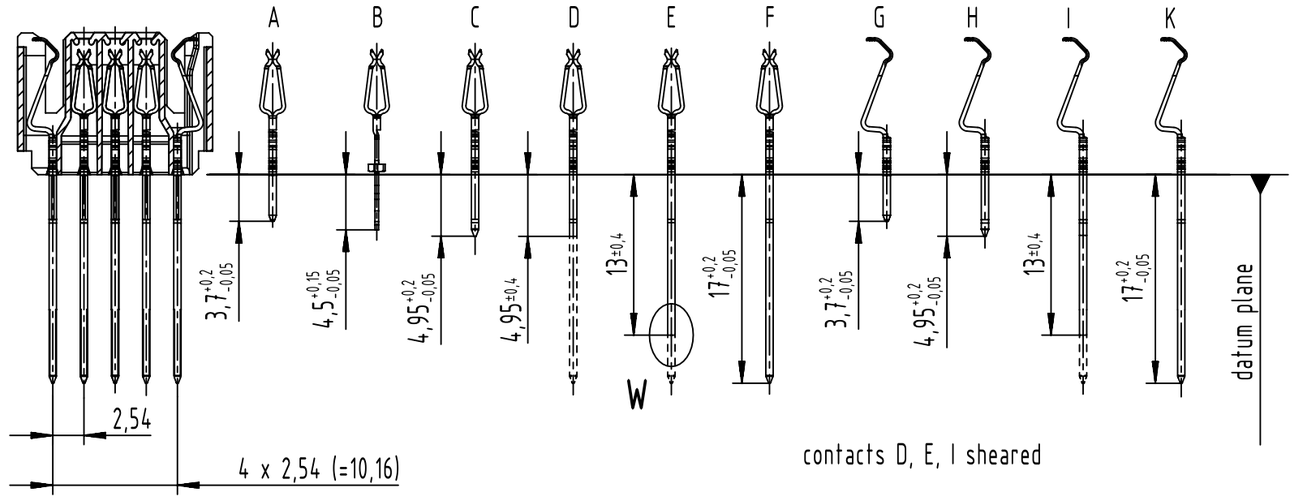

C (2:1)

contact arrangement

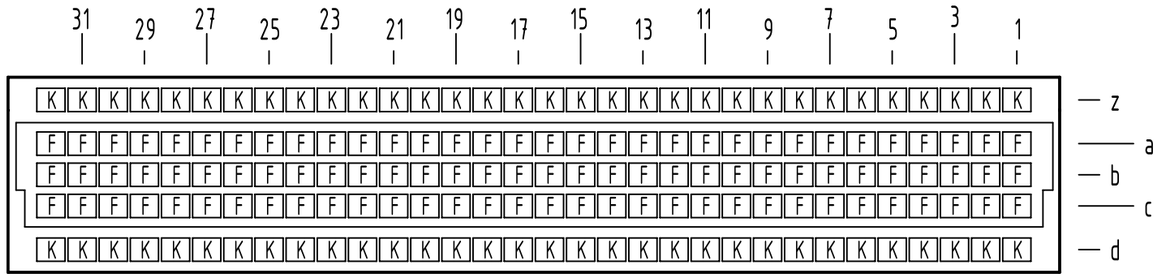

B (2:1)

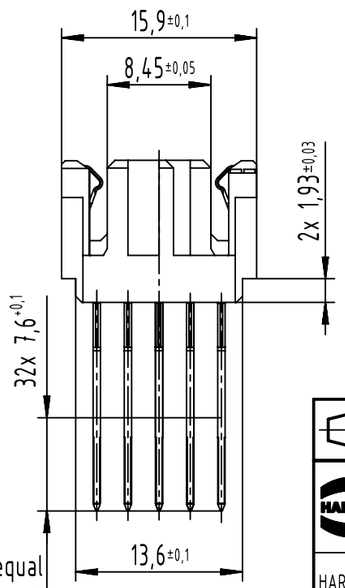

mating zone equal performance level

(1) recommended configuration of plated through holes and further information see: DS 02022100101

for sheared contacts

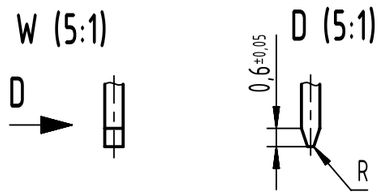

part no.	performance level (1)
02 02 160 2302	2
02 02 160 1302	1

All Dimensions in mm Original Size DIN A3	Scale 1:1	Free size tol. IEC 61076-4-113		Ref. Sub.	
All rights reserved Department EL PD	Created by STORCK	Inspected by LEHNERT	Standardisation 302077	Date 2020-11-27	State Final Release
HARTING Electronics GmbH D-32339 Espelkamp	Title har-bus 64 female press-in without flange 160 p.				Doc-Key / ECM-Nr. 100076368/UGD/003/C 500000131790
	Type TB	Number 0202160X302		Rev. C	Page 1/1

A3

Downloaded from Arrow.com.