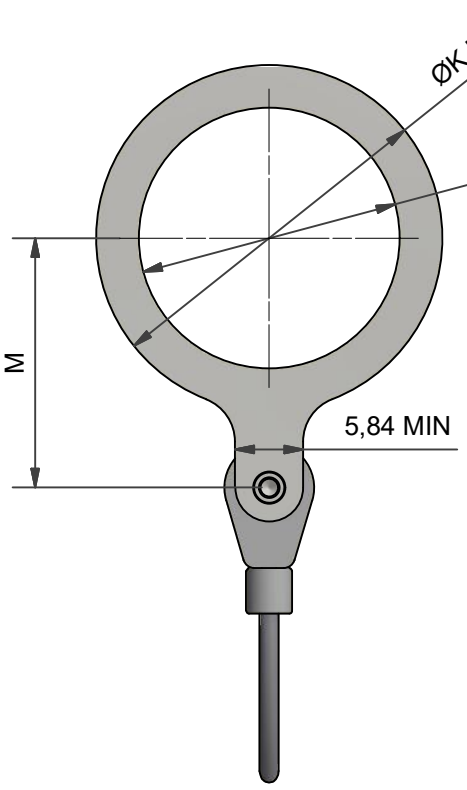

STYLE N

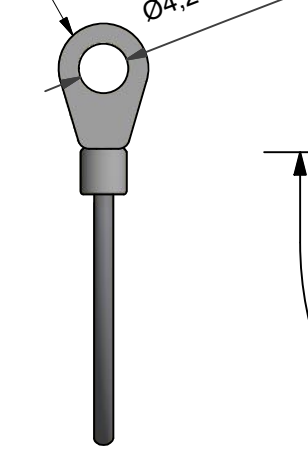

STYLE R

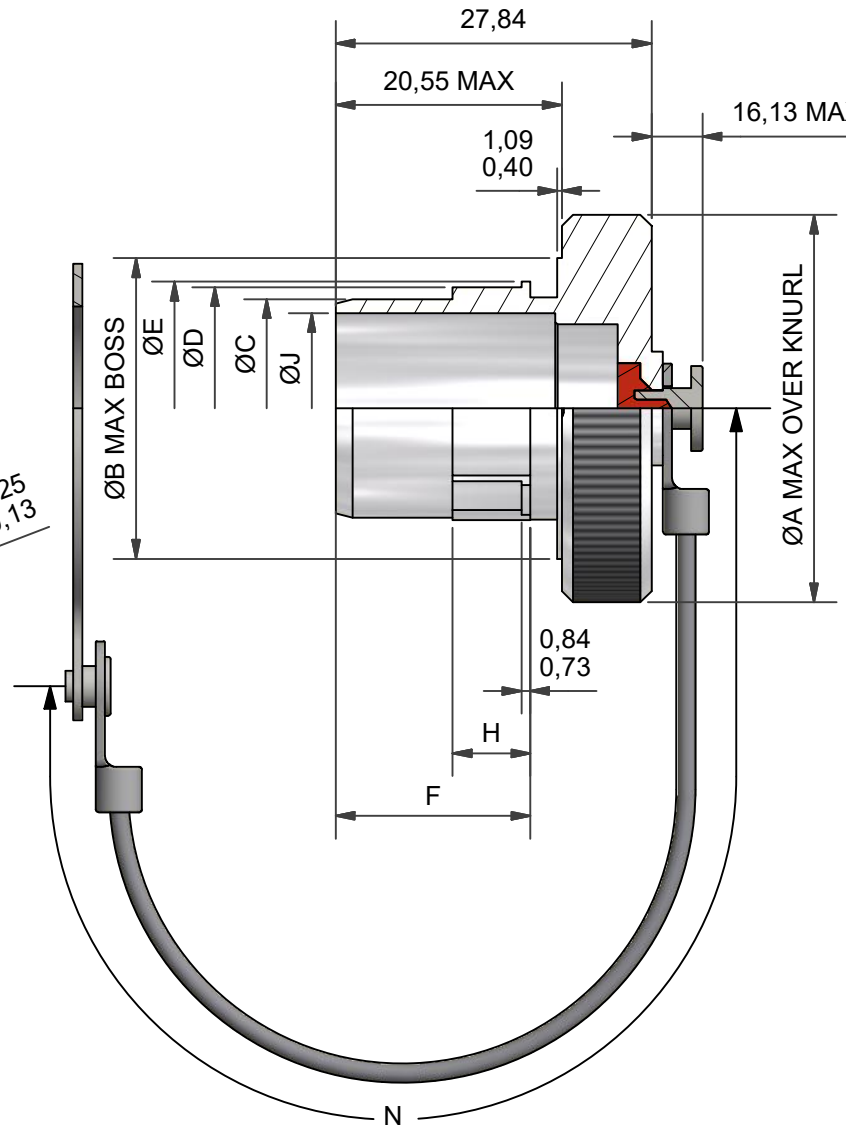

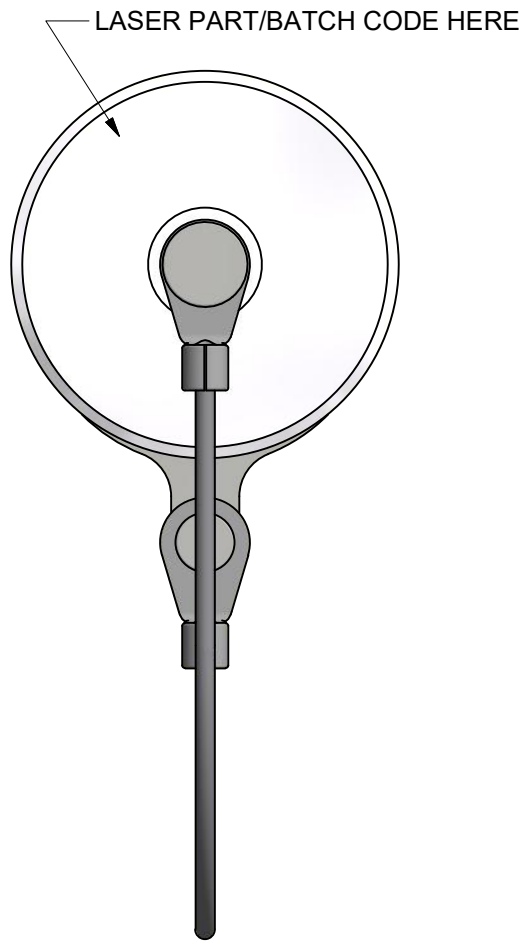

SHELL SIZE	SHELL SIZE CODE	A MAX	B MAX	C	D	E	F	H	J MIN	K MAX	L MIN	M	N ±6.35
11	B	35,05	20,15	12,93 - 12,77	14,99 - 14,89	16,26 - 16,16	17,15 - 16,99	7,02 - 6,85	10,74	27,00	18,00	20,50 - 18,00	127,00
13	C	39,88	23,35	16,10 - 19,54	18,32 - 18,22	19,33 - 19,23	17,15 - 16,99	7,02 - 6,85	13,63	30,00	20,00	27,00 - 20,00	127,00
15	D	42,17	26,52	19,28 - 19,12	21,47 - 21,37	22,48 - 22,38	17,15 - 16,99	7,02 - 6,85	16,81	31,00	23,00	22,50 - 18,00	127,00
17	E	45,47	29,72	22,48 - 22,32	24,64 - 24,54	25,66 - 25,56	17,15 - 16,99	7,02 - 6,85	19,98	37,00	26,00	30,50 - 23,50	127,00
19	F	48,77	32,87	25,63 - 25,47		27,67 - 27,57	16,90 - 16,73	6,76 - 6,60	22,25	40,00	29,00	31,50 - 25,00	127,00
21	G	52,33	36,05	28,80 - 28,64		30,84 - 30,74	16,90 - 16,73	6,76 - 6,60	25,42	44,00	32,00	33,00 - 26,50	127,00
23	H	57,15	39,22	31,98 - 31,82		34,12 - 34,02	16,90 - 16,73	6,76 - 6,60	28,60	46,00	34,00	34,00 - 27,50	127,00
25	J	60,45	42,40	35,15 - 35,00		37,34 - 37,24	16,90 - 16,73	6,76 - 6,60	31,77	49,00	39,00	38,00 - 30,00	127,00

PC451-15-1-C-N

- SERIES
- SHELL SIZE
- MATERIAL - SEE TABLE
- FINISH - SEE TABLE
- LANYARD STYLE
  - R -ROPE AND EYELET
  - N - ROPE AND RING

CODE	MATERIAL / FINISH
1-C	ALUMINIUM / ELECTROLESS NICKEL
1-B	ALUMINIUM / CADMIUM OLIVE DRAB OVER ELECTROLESS NICKEL
1-ZB	ALUMINIUM / ZINC COBALT OLIVE DRAB OVER ELECTROLESS NICKEL
1-ZK	ALUMINIUM / ZINC COBALT BLACK OVER ELECTROLESS NICKEL
1-ZN	ALUMINIUM / ZINC NICKEL BLACK PASSIVATE OVER ELECTROLESS NICKEL
4-J	STAINLESS STEEL / PASSIVATE
2-Z	NICKEL ALUMINIUM BRONZE / SHOT BLAST

LIST NOT EXHAUSTIVE, FOR COMPREHENSIVE LIST AND SPECS, SEE WEBSITE

PART NUMBER FOR
ALTERNATIVE LANYARD/ATTACHMENT OPTIONS

PC451-15-1-C-WR4-17

- SERIES
- SHELL SIZE
- MATERIAL - SEE TABLE
- FINISH - SEE TABLE
- LANYARD STYLE (SEE NOTE 2)
- LANYARD LENGTH (IN INCHES)
  - +1.0"/0" TOLERANCE
- ATTACHMENT STYLE (SEE NOTE 2)

NOTES :

1. DIMENSIONS ARE IN MILLIMETERS
2. SEE P11078 FOR ALTERNATIVE LANYARD/ATTACHMENT OPTIONS

MATERIALS
COVER - SEE TABLE
RING - STAINLESS STEEL, PASSIVATED, 1,02 MILLIMETERS MAXIMUM THICKNESS
ROPE - INSULATED STAINLESS STEEL, PASSIVATED
FASTENER - STAINLESS STEEL,PASSIVATED

DRAWN	DATE
N.HAWKINS	24/09/2018
DESIGN APPROVAL	DATE
M.PAUL	28/11/2016
DOC TYPE	Customer Drawing
ISSUE/REV AC	DCR ---
NCAGE CODE U5792	WEIGHT N/A

3RD ANGLE PROJECTION NOT TO SCALE

UNLESS OTHERWISE SPECIFIED
ALL DIMENSIONS IN MILLIMETRES
GENERAL TOL
LINEAR +/-0,25MM
ANGULAR +/- 1°

MATERIAL
SEE PART NUMBER BREAKDOWN

FINISH
SEE PART NUMBER BREAKDOWN

PART NUMBER: PC451 SERIES

TITLE: PLUG PROTECTIVE COVER

ASSY USED ON: MIL-DTL-38999/51

THIS DRAWING IS COPYRIGHT AND THE PROPERTY OF POLAMCO LTD
IT MUST NOT BE COPIED, USED FOR MANUFACTURE OR OTHERWISE
DISCLOSED WITHOUT PRIOR WRITTEN CONSENT OF THE COMPANY.

POLAMCO LTD, WESTON LOCK,
LOWER BRISTOL ROAD
BATH BA2 1EP

SHT 1

DRAWING NO: C5877

Downloaded from Arrow.com.