molex

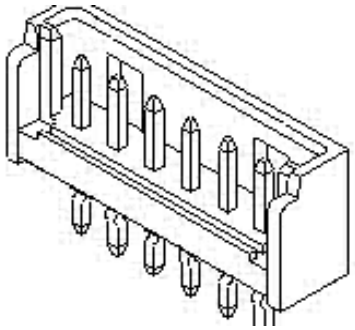

Part Number : 532902080
Product Description : 2.00mm Pitch SlimStack Board-to-Board Header, Vertical, Single Row, 0.50mm Square Pin, with Friction Lock, 20 Circuits, with Kinked PC Tails
Series Number : 53290
Status : Obsolete
Product Category : Board-to-Board Connectors

Obsolete

Documents and Resources

Drawings

532902080_sd.pdf

Specifications

532909200-201.pdf

PS-52418-003-001.pdf

Product Environment Compliance

Compliance

GADSL/IMDS	Compliant with Exemption 33; 44
China RoHS	per SJ/T 11365-2006
EU ELV	Not Relevant
Low-Halogen Status	Not Low-Halogen per IEC 61249-2-21
REACH SVHC	Not Contained per D(2025)7771-DC (04 Feb 2026)
EU RoHS	Compliant per EU 2015/863

Compliance Statements

- EU RoHS
- REACH SVHC
- Low-Halogen

Industry Documents

- IPC 1752A Class C

Downloaded from Arrow.com.

- IPC 1752A Class D
- Molex Product Compliance Declaration
- IEC-62474
- chemSHERPA (xml)

Substances of Interest
- PFAS

EU RoHS Certificate of Compliance

Additional Product Compliance Information

Part Details

General

Status	Obsolete
Category	Board-to-Board Connectors
Series	53290
Description	2.00mm Pitch SlimStack Board-to-Board Header, Vertical, Single Row, 0.50mm Square Pin, with Friction Lock, 20 Circuits, with Kinked PC Tails
Application	Board-to-Board, Signal
Component Type	Plug
Product Name	SlimStack
UPC	822348478620

Agency

UL	E29179

Electrical

Current - Maximum per Contact	1.5A
Voltage - Maximum	125V

Physical

Breakaway	No
Circuits (Loaded)	20
Circuits (maximum)	20
Color - Resin	Natural

Obsolete

Downloaded from Arrow.com.

Durability (mating cycles max)	30
First Mate / Last Break	No
Flammability	94V-0
Glow-Wire Capable	No
Guide to Mating Part	No
Keying to Mating Part	No
Lock to Mating Part	Yes
Mated Height	3.95mm
Mated Width	6.00mm
Material - Metal	Brass
Material - Plating Mating	Tin
Material - Plating Termination	Tin
Material - Resin	Polyester
Net Weight	901.300/mg
Number of Rows	1
Orientation	Vertical
Packaging Type	Tray
PCB Locator	No
PCB Retention	Yes
PCB Thickness - Recommended	1.60mm
PC Tail Length	3.20mm
Pitch - Mating Interface	2.00mm
Plating min - Mating	1.016µm
Plating min - Termination	1.016µm
Polarized to Mating Part	Yes
Polarized to PCB	No
Shrouded	Partially Shrouded
Temperature Range - Operating	-40° to +105°C
Termination Interface Style	Through Hole

Obsolete

Mates With / Use With

Mates with Part(s)

Description	Part Number
2.00mm Pitch Right-Angle	52418

Downloaded from Arrow.com.

SlimStack Receptacles	

This document was generated on Apr 29, 2026

Obsolete

Downloaded from Arrow.com.