Connector Location A

Connector Location B

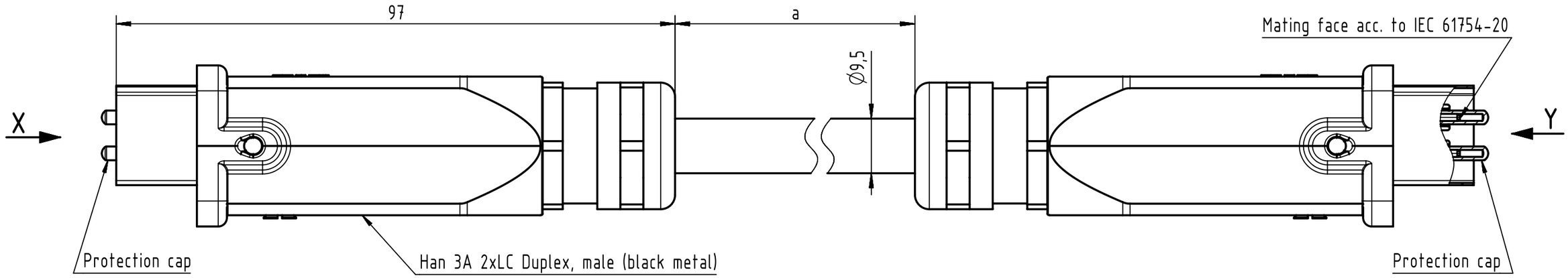

X
(without protection cap)

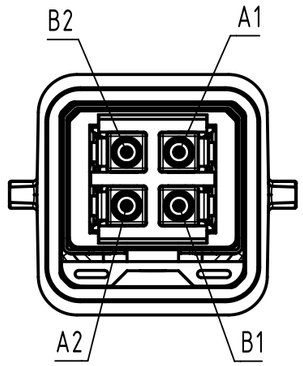

Loading-Plan

A1	yellow 1	B2
B1	yellow 2	A2
A2	yellow 3	B1
B2	yellow 4	A1

Y
(without protection cap)

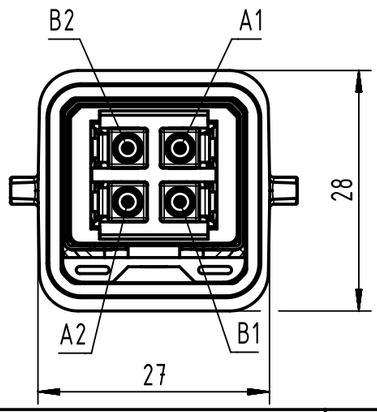

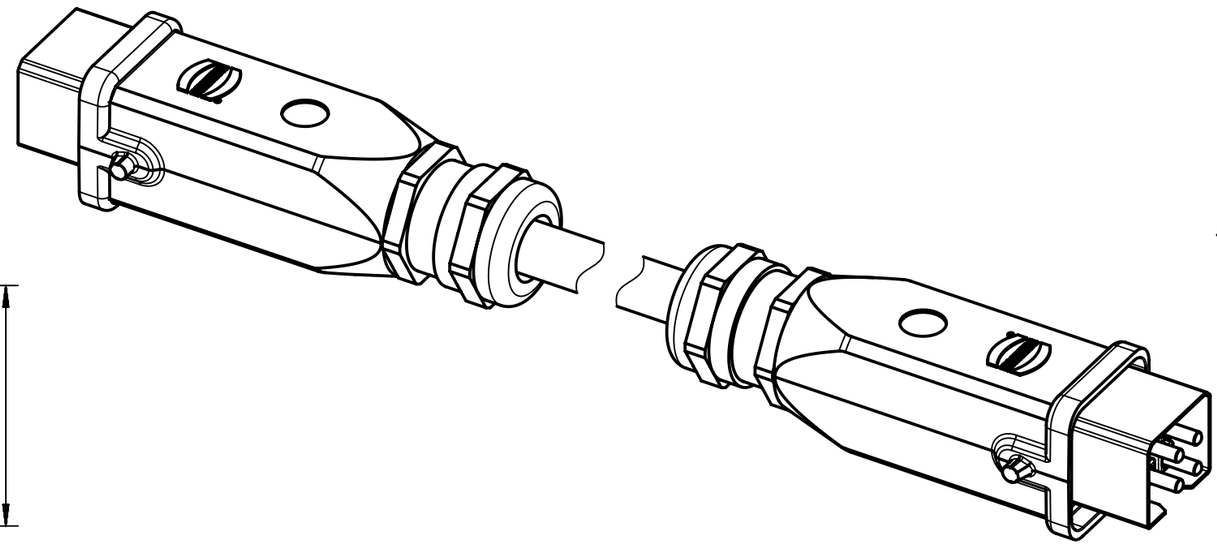

Cont. no.	Part no.	Type of cable	Dim. a[m]
9	33542113000001	F.O. breakout cable single mode, 4-channel, E9/125, PVC, black	300
8	33542111000001		100
7	33542110600001		60
6	33542110500001		50
5	33542110400001		40
4	33542110200001		20
3	33542110100001		10
2	33542110050001		5
1	33542110010001		1

-Protection level: IP67/65
-Temperature range: -25°C ... +70°C

All Dimensions in mm	Tech. Character.	Free size tol.	According to production drawing

All rights reserved

Department HCS - RO	Created by MUNTEANV	Inspected by POPESCUD	Standardisation AVRAM	Date 2017-03-23	State Final Release
HARTING Customised Solutions D-32427 Minden	Title Han 3A LC Cable Assembly				Doc-Key / ECM-Nr. 100178844/UGD/014/B 500000117182
	Type TB	Number 3354211XXX0001		Rev. B	Page 1/1

A3

Downloaded from Arrow.com.