REVISIONS					
REV	ECO	DESCRIPTION	DATE	BY	APPR
B1	-	RELEASE NEW DWG FORMAT	May.10,2014	Drack	Tommy
B2	-	UPDATED TABLE	Jun.27,2015	Drack	Tommy

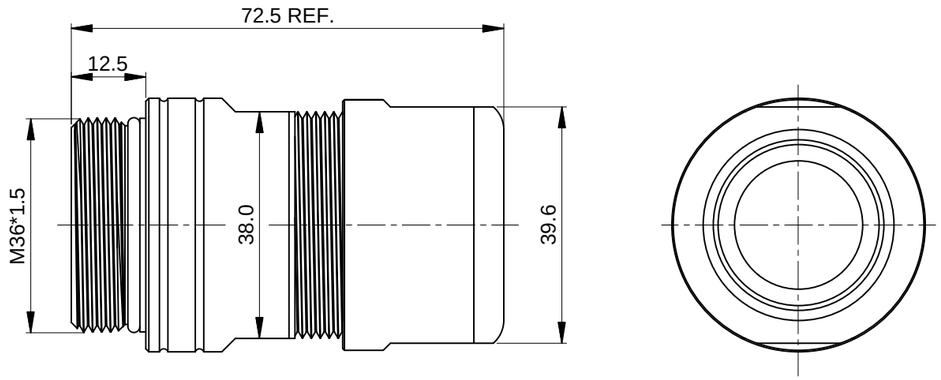

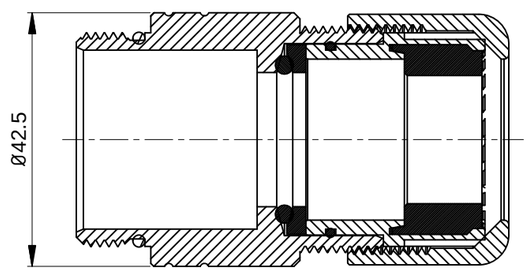

Part Number	Cable OD Range
MC3CG-S4	17.0~19.0 mm
MC3CG-S5	19.0~21.0 mm
MC3CG-S6	21.0~23.0 mm
MC3CG-S7	23.0~25.5 mm

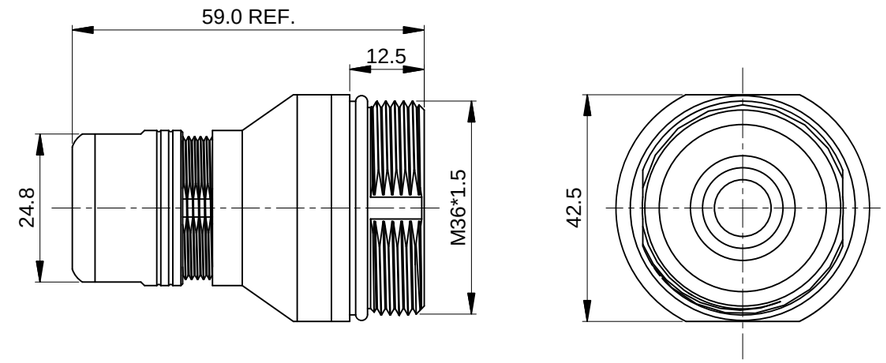

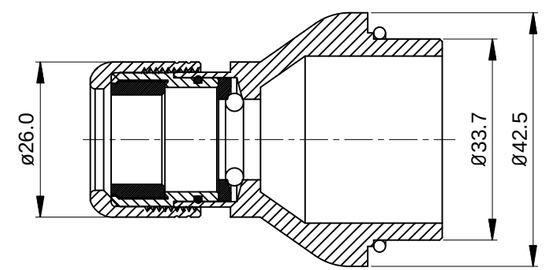

Part Number	Cable OD Range
MC3CG-S1	10.0~12.0 mm
MC3CG-S2	12.0~14.0 mm
MC3CG-S3	14.0~17.0 mm

NOTES: UNLESS OTHERWISE SPECIFIED

1. MATERIAL:
   EMI SHIELDING RING: STAINLESS STELL
   SEAL: EPDM
   HOUSING BODY: ZINC DIE CAST, NICKEL PLATED

2. SPECIFICATIONS:
   2.1 DEGREE OF PROTECTION: IP67 (MATED CONDITION)
   2.2 RoHS COMPLIANT

3. ALL DIMENSIONS ARE FOR REFERENCE USE ONLY.

QUANTITY	PART NUMBER	DESCRIPTION	ITEM
	SEE PART NUMBER CHART		

MATERIALS LIST

UNLESS OTHERWISE SPECIFIED
1) All dimensions are in metric(mm).
2) Tolerances are as follows:
1 PL DEC ±0.30 | Fractions ±1/64
2 PL DEC ±0.15 | Angles ±1°
3 PL DEC ±0.08
3) Note reference = X

MATERIAL SPECIFICATIONS:

PROCESS SPECIFICATIONS:

NEXT ASS'Y:

SIGNATURES		DATE
DRAWN:	Drack	Jun.27,2015
CHECKED:		
ENGINEER:		
APPROVAL:		
CUSTOMER:		

THIS DRAWING IS SUPPLIED FOR INFORMATION ONLY. DESIGN FEATURES, SPECIFICATIONS AND PERFORMANCE DATA SHOWN HEREON ARE THE PROPERTY OF THE AMPHENOL CORPORATION. NO RIGHTS OF REPRODUCTION ARE IMPLIED. ALL DIMENSIONS ARE SUBJECT TO NORMAL MANUFACTURING VARIATIONS.

Amphenol

Sine Systems - www.amphenol-sine.com
44724 Morley Drive
Clinton Township, MI 48036

M40C,CORD GRIP

SIZE: B | TYPE: C- | DWG NO: MC3CG-Sx | REVISION: B2

SCALE: NONE | SHEET 1 OF 1

TITLE: M40C,CORD GRIP
DWG NO: MC3CG-Sx
REV: B2
SH: 1
OF: 1

Downloaded from Arrow.com.