CUI Devices is now Same Sky! Learn More

MODEL: CSS-40408N | DESCRIPTION: SPEAKER

FEATURES

- 100 dB SPL
- 440 Hz resonant frequency
- Nd-Fe-B magnet

SPECIFICATIONS

parameter	conditions/description	min	typ	max	units
input power	maximum power: IEC-60268-5, filter 60s on/120s off, 10 cycles at room temp		5.0	8.0	W
impedance	at 1.0 kHz	6.8	8	9.2	Ω
resonant frequency (Fo)	at 1.0 V	352	440	528	Hz
frequency response	output SPL -10 dB	Fo		20,000	Hz
sound pressure level	at 1 W, 0.1 m ave, at 0.6, 0.8, 1.0, 1.2 kHz	97	100	103	dB
distortion	at 1.0 kHz, 1 W			5	%
buzz, rattle, etc.	must be normal at sine wave between Fo ~ 20,000 Hz		6.32		V
dimensions	40.1 x 40.1 x 14.5				mm
magnet	Nd-Fe-B				
material	ABS777D				
cone material	PET				
terminal	solder terminals				
weight			44		g
operating temperature		-20		60	°C
storage temperature		-40		70	°C
RoHS	yes				

Notes: 1. All specifications measured at 15~35°C, humidity at 45~85%, under 86~106 kPa pressure, unless otherwise noted.

SOLDERABILITY

parameter	conditions/description	min	typ	max	units
hand soldering	for 3 ±1 seconds	360	370	380	°C

Downloaded from Arrow.com.

MECHANICAL DRAWING

units: mm
tolerance: ±0.2 mm

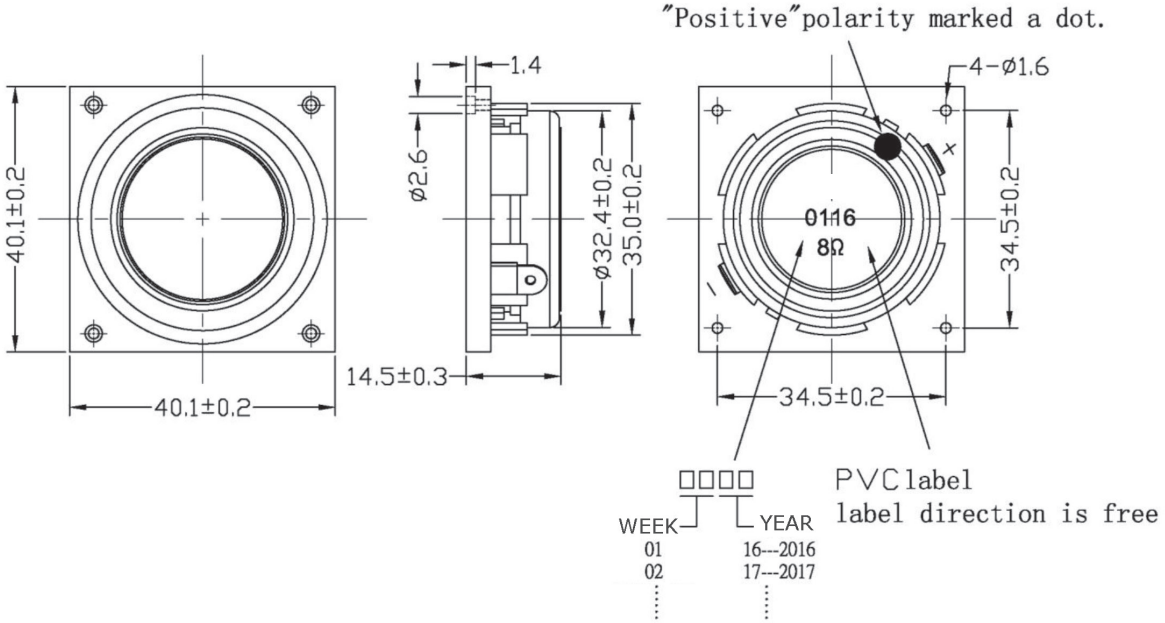

FREQUENCY RESPONSE CURVE

Frequency Response.Magn dB re 20.00µ PA (at 1 W / 0.1 m)

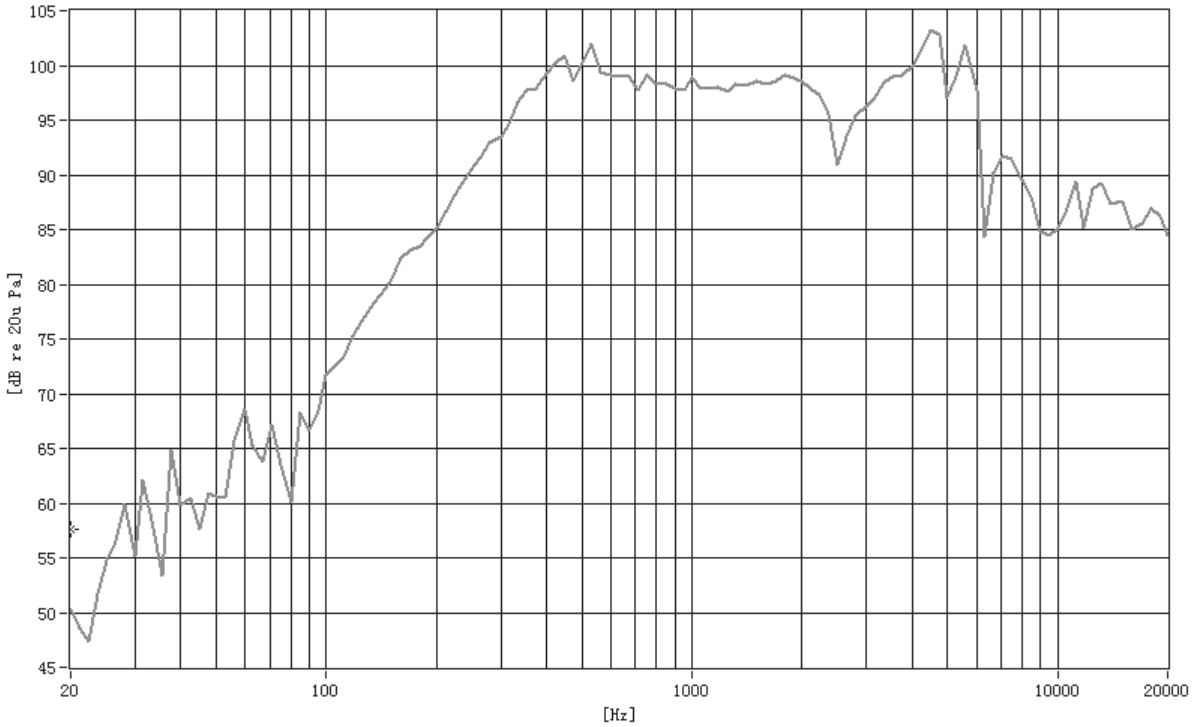

Downloaded from Arrow.com.

PACKAGING

units: mm

Carton Size: 315 x 315 x 285 mm
Tray QTY: 30 pcs per tray
Carton QTY: 240 pcs per carton

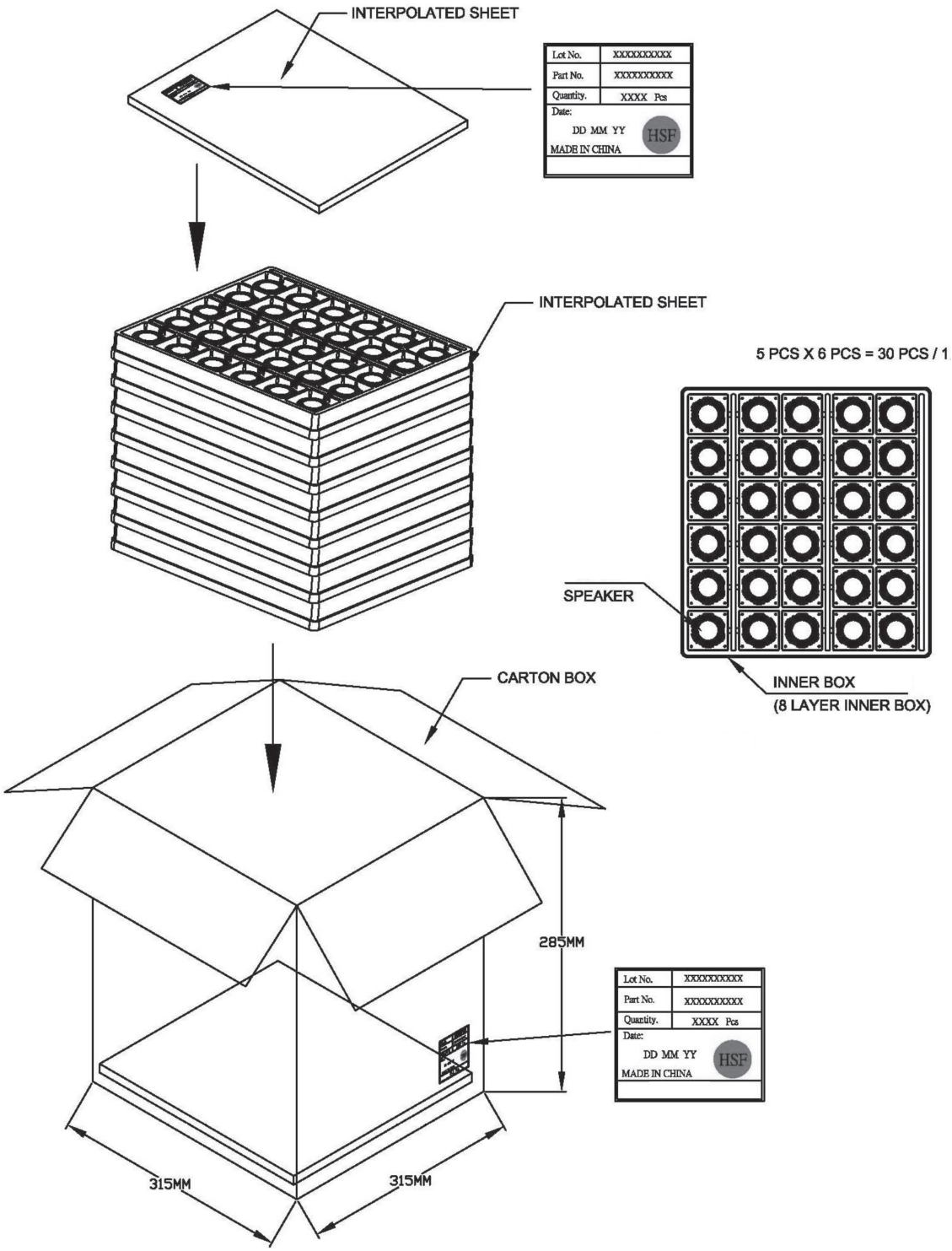

Downloaded from Arrow.com.

REVISION HISTORY

rev.	description	date
1.0	initial release	06/24/2016
1.01	changed marking from stamp to PVC label	08/21/2018
1.02	brand update	01/22/2020
1.03	logo, datasheet style update	08/05/2022
1.04	CUI Devices rebranded to Same Sky	09/11/2024

The revision history provided is for informational purposes only and is believed to be accurate.

Same Sky offers a one (1) year limited warranty. Complete warranty information is listed on our website.

Same Sky reserves the right to make changes to the product at any time without notice. Information provided by Same Sky is believed to be accurate and reliable. However, no responsibility is assumed by Same Sky for its use, nor for any infringements of patents or other rights of third parties which may result from its use.

Same Sky products are not authorized or warranted for use as critical components in equipment that requires an extremely high level of reliability. A critical component is any component of a life support device or system whose failure to perform can be reasonably expected to cause the failure of the life support device or system, or to affect its safety or effectiveness.

Downloaded from Arrow.com.

Downloaded from Arrow.com.