MOSFET – N-Channel, SUPERFET® II, FRFET®

650 V, 54 A, 77 mΩ

FCH077N65F-F085

Description

SuperFET II MOSFET is ON Semiconductor's brand−new high voltage super−junction (SJ) MOSFET family that is utilizing charge balance technology for outstanding low on−resistance and lower gate charge performance. This technology is tailored to minimize conduction loss, provide superior switching performance, dv/dt rate and higher avalanche energy. Consequently SuperFET II is very well suited for the Soft switching and Hard Switching topologies like High Voltage Full Bridge and Half Bridge DC−DC, Interleaved Boost PFC, Boost PFC for HEV−EV automotive.

SuperFET II FRFET MOSFET's optimized body diode reverse recovery performance can remove additional component and improve system reliability.

Features

- Typ. $R_{DS(on)}$ = 68 mΩ at V_{GS} = 10 V, I_D = 27 A
- Typ. $Q_{g(tot)}$ = 126 nC at V_{GS} = 10 V, I_D = 27 A
- UIS Capability
- AEC−Q101 Qualified and PPAP Capable
- These Devices are Pb−Free and are RoHS Compliant

Applications

- Automotive On Board Charger
- Automotive DC/DC Converter for HEV

ON Semiconductor®

www.onsemi.com

V_{DS}	$R_{DS(ON)}$ MAX	I_D MAX
650 V	77 mΩ @ 10 V	54 A

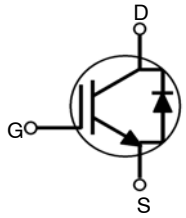

N-CHANNEL MOSFET

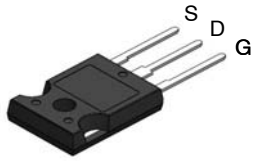

TO−247−3LD
CASE 340CK

MARKING DIAGRAM

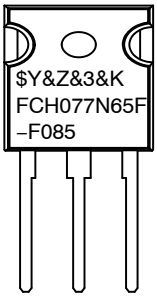

$Y	= ON Semiconductor Logo
&Z	= Assembly Plant Code
&3	= Numeric Date Code
&K	= Lot Code
FCH077N65F−F085	= Specific Device Code

ORDERING INFORMATION

See detailed ordering and shipping information on page 2 of this data sheet.

© Semiconductor Components Industries, LLC, 2014

Downloaded from Arrow.com.

ABSOLUTE MAXIMUM RATINGS (T_C = 25°C unless otherwise noted)

Symbol	Parameter	Value	Unit
V_{DSS}	Drain to Source Voltage	650	V
V_{GSS}	Gate to Source Voltage	±20	V
I_D	Drain Current − Continuous (V_{GS} = 10) (Note 1)	54	A
	Pulsed Drain Current	See Fig. 4	A
E_{AS}	Single Pulsed Avalanche Rating (Note 2)	1128	mJ
dv/dt	MOSFET dv/dt	100	V/ns
	Peak Diode Recovery dv/dt (Note 3)	50	
P_D	Power Dissipation	481	W
	Derate Above 25°C	3.85	W/°C
T_J, T_{STG}	Operating and Storage Temperature Range	−55 to + 150	°C

Stresses exceeding those listed in the Maximum Ratings table may damage the device. If any of these limits are exceeded, device functionality should not be assumed, damage may occur and reliability may be affected.

1. Current is limited by bondwire configuration.
2. Starting T_J = 25 °C, L = 18.65 mH, I_{AS} = 11 A, V_{DD} = 100 V during inductor charging and V_{DD} = 0 V during time in avalanche.
3. $I_{SD} \leq 27$ A, di/dt ≤ 200 A/μs, $V_{DD} \leq 380$ V, starting T_J = 25 °C.

PACKAGE MARKING AND ORDERING INFORMATION

Device Marking	Device	Package	Reel Size	Tape Width	Quantity
FCH077N65F	FCH077N65F−F085	TO−247−3	–	–	30 Units

THERMAL CHARACTERISTICS

Symbol	Parameter	Value	Unit
$R_{\theta JC}$	Thermal Resistance, Junction to Case, Max.	0.26	°C/W
$R_{\theta JA}$	Thermal Resistance, Junction to Ambient, Max. (Note 4)	40	

4. $R_{\theta JA}$ is the sum of the junction−to−case and case−to−ambient thermal resistance, where the case thermal reference is defined as the solder mounting surface of the drain pins. $R_{\theta JC}$ is guaranteed by design, while $R_{\theta JA}$ is determined by the board design. The maximum rating presented here is based on mounting on a 1 in^2 pad of 2oz copper.

Downloaded from Arrow.com.

ELECTRICAL CHARACTERISTICS (T_C = 25°C unless otherwise noted)

Symbol	Parameter	Test Condition		Min.	Typ.	Max.	Unit
OFF CHARACTERISTICS							
BV_{DSS}	Drain to Source Breakdown Voltage	I_D = 250 μA, V_{GS} = 0 V		650	–	–	V
I_{DSS}	Drain to Source Leakage Current	V_{DS} = 650 V, V_{GS} = 0 V	T_J = 25 °C	–	–	10	μA
			T_J = 150 °C (Note 5)	–	–	1	mA
I_{GSS}	Gate to Source Leakage Current	V_{GS} = ±20 V		–	–	±100	nA
ON CHARACTERISTICS							
$V_{GS(th)}$	Gate to Source Threshold Voltage	V_{GS} = V_{DS}, I_D = 250 μA		3	–	5	V
$R_{DS(on)}$	Drain to Source On Resistance	I_D = 27 A, V_{GS} = 10 V	T_J = 25 °C	–	68	77	mΩ
			T_J = 150 °C (Note 5)	–	154	184	mΩ
DYNAMIC CHARACTERISTICS							
C_{iss}	Input Capacitance	V_{DS} = 25 V, V_{GS} = 0 V, f = 1 MHz		–	5385	7162	pF
C_{oss}	Output Capacitance			–	5629	7486	pF
C_{rss}	Reverse Transfer Capacitance			–	194	–	pF
$C_{oss(eff.)}$	Effective Output Capacitance	V_{DS} = 0 V to 520 V, V_{GS} = 0 V		–	693	–	pF
R_g	Gate Resistance	f = 1 MHz		–	0.5	–	Ω
$Q_{g(tot)}$	Total Gate Charge	V_{DD} = 380 V, I_D = 27 A, V_{GS} = 10 V		–	126	164	nC
$Q_{g(th)}$	Threshold Gate Charge			–	9	12	nC
Q_{gs}	Gate to Source Gate Charge			–	28	–	nC
Q_{gd}	Gate to Drain “Miller”Charge			–	53	–	nC
SWITCHING CHARACTERISTICS							
t_{on}	Turn−On Time	V_{DD} = 380 V, I_D = 27 A, V_{GS} = 10 V, R_G = 4.7 Ω		–	64	148	ns
$t_{d(on)}$	Turn-On Delay Time			–	37	–	ns
t_r	Rise Time			–	27	–	ns
$t_{d(off)}$	Turn-Off Delay Time			–	105	–	ns
t_f	Fall Time			–	5.3	–	ns
t_{off}	Turn−Off Time			–	108.3	237	ns
DRAIN-SOURCE DIODE CHARACTERISTICS							
V_{SD}	Source to Drain Diode Voltage	V_{GS} = 0 V, I_{SD} = 27 A		–	–	1.2	V
t_{rr}	Reverse Recovery Time	V_{DD} = 520 V, I_F = 27 A, di_{SD}/dt = 100 A/μs		–	190	–	ns
Q_{rr}	Reverse Recovery Charge			–	1.5	–	μC

Product parametric performance is indicated in the Electrical Characteristics for the listed test conditions, unless otherwise noted. Product performance may not be indicated by the Electrical Characteristics if operated under different conditions.

5. The maximum value is specified by design at T_J = 150°C. Product is not tested to this condition in production.

Downloaded from Arrow.com.

TYPICAL CHARACTERISTICS

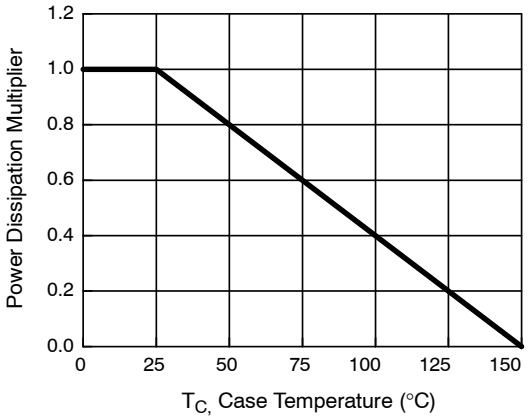

Figure 1. Normalized Power Dissipation vs. Case Temperature

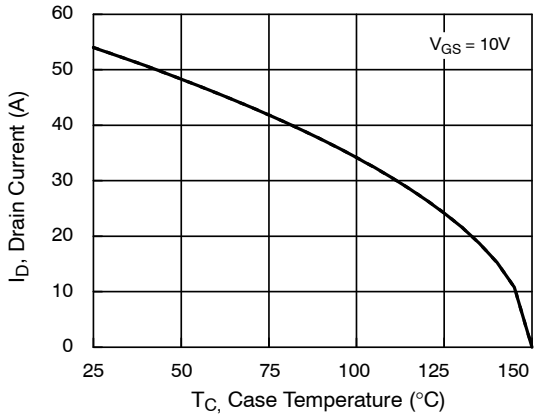

Figure 2. Maximum Continuous Drain Current vs. Case Temperature

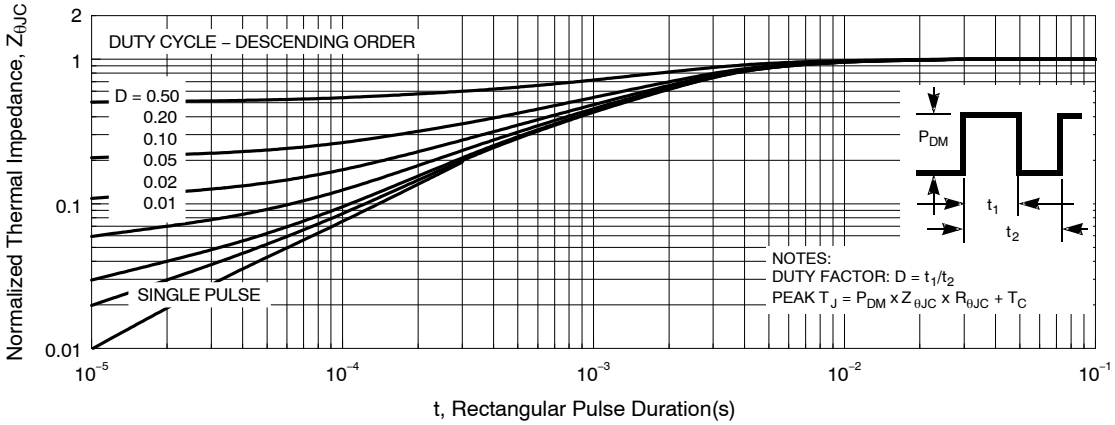

Figure 3. Normalized Maximum Transient Thermal Impedance

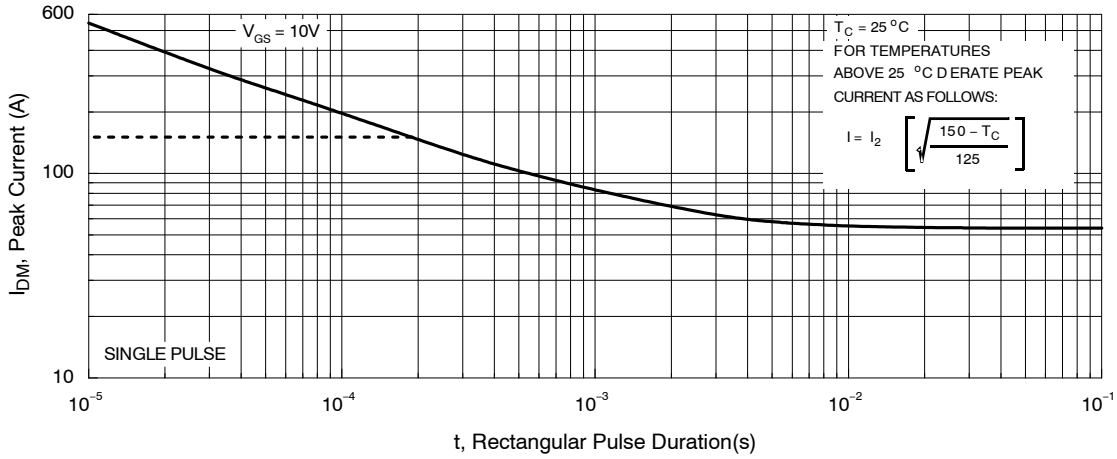

Figure 4. Peak Current Capability

Downloaded from Arrow.com.

TYPICAL CHARACTERISTICS

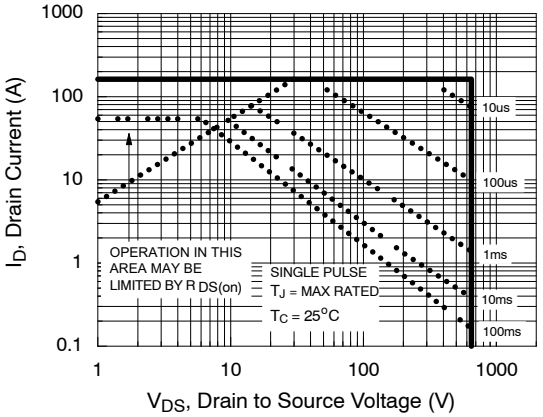

Figure 5. Forward Bias Safe Operating Area

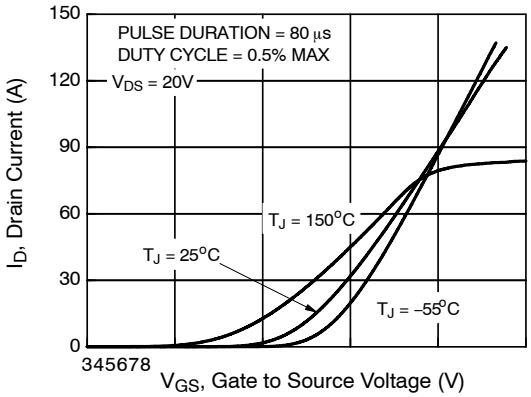

Figure 6. Transfer Characteristics

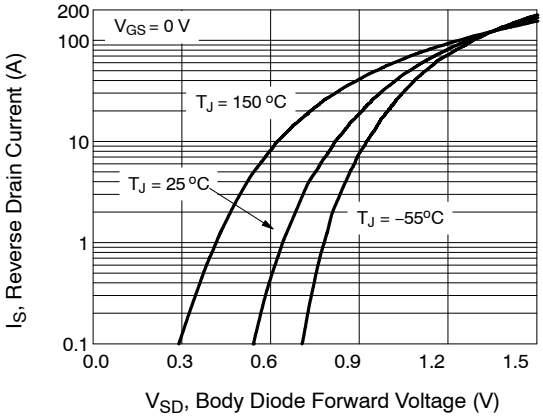

Figure 7. Forward Diode Characteristics

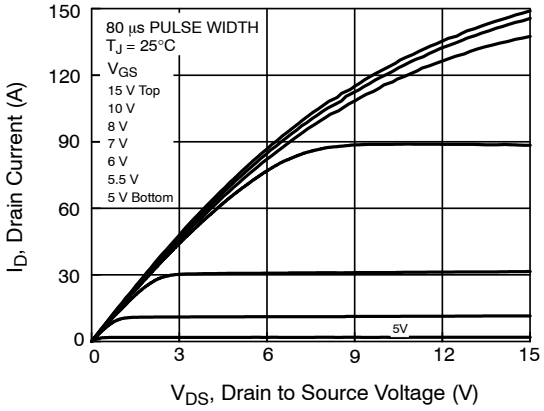

Figure 8. Saturation Characteristics

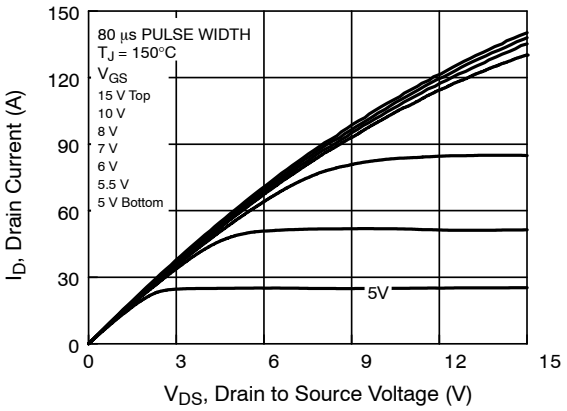

Figure 9. Saturation Characteristics

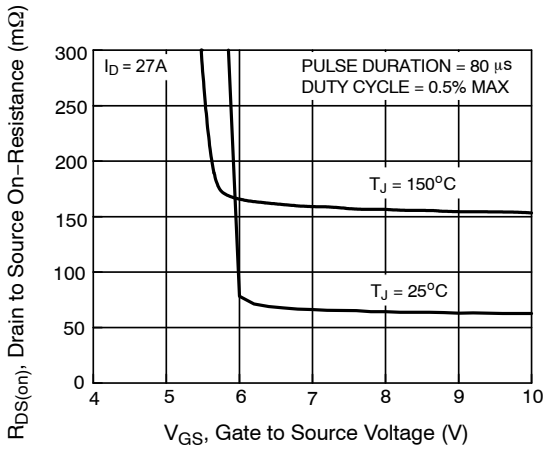

Figure 10. R_{DSON} vs. Gate Voltage

Downloaded from Arrow.com.

TYPICAL CHARACTERISTICS

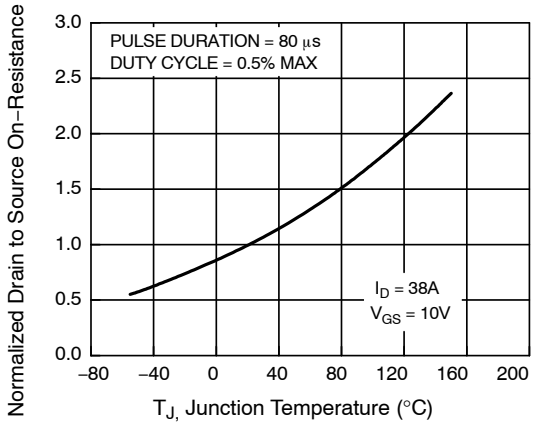

Figure 11. Normalized R_{DSON} vs. Junction Temperature

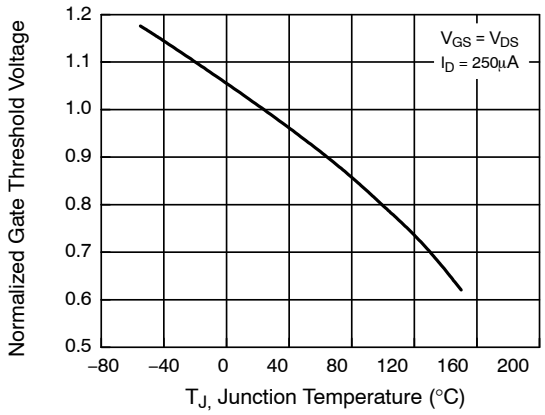

Figure 12. Normalized Gate Threshold Voltage vs. Temperature

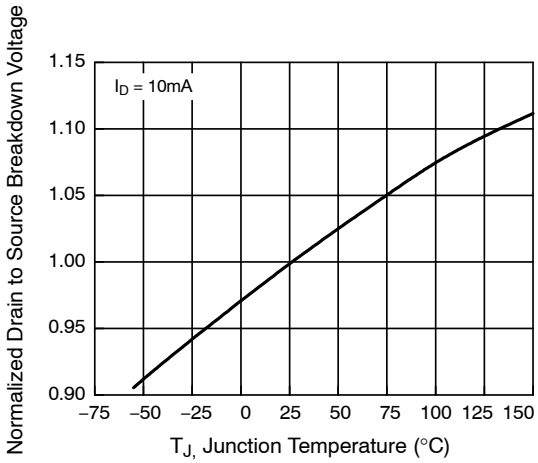

Figure 13. Normalized Drain to Source Breakdown Voltage vs. Junction Temperature

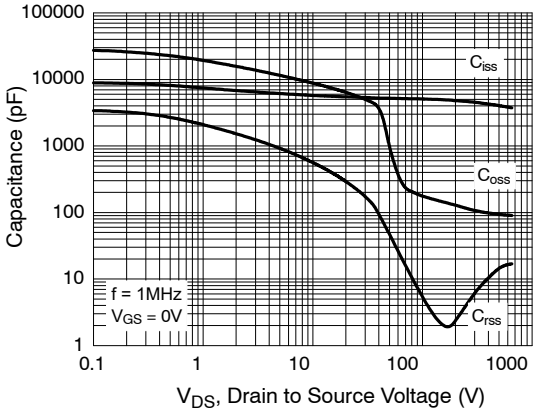

Figure 14. Capacitance vs. Drain to Source Voltage

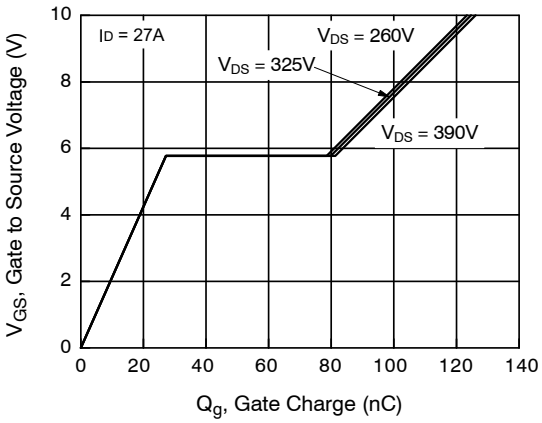

Figure 15. Gate Charge vs. Gate to Source Voltage

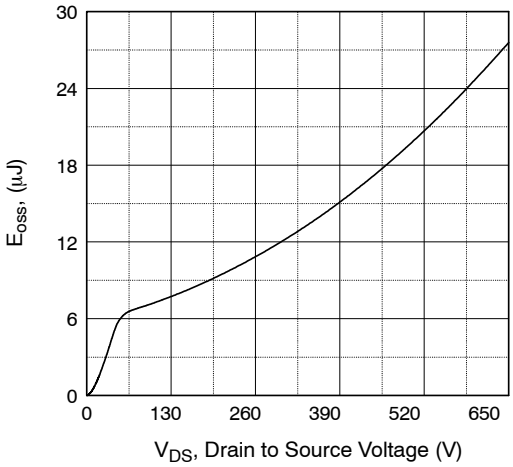

Figure 16. Eoss vs. Drain to Source Voltage

Downloaded from Arrow.com.

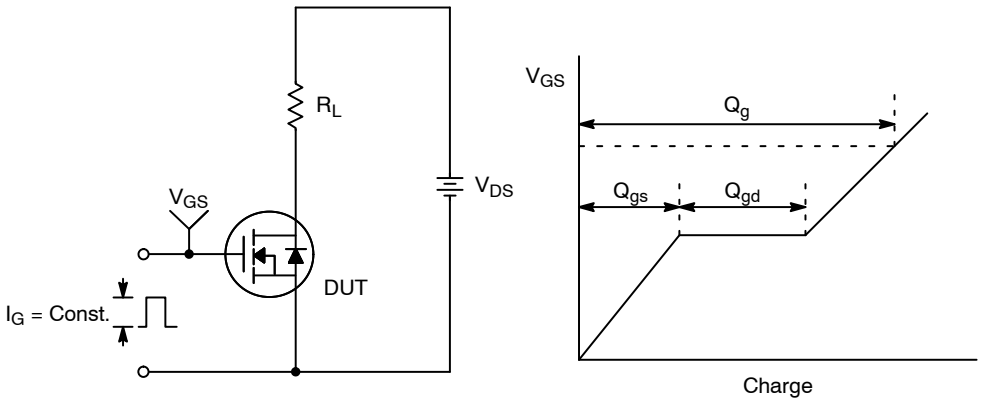

Figure 17. Gate Charge Test Circuit & Waveform

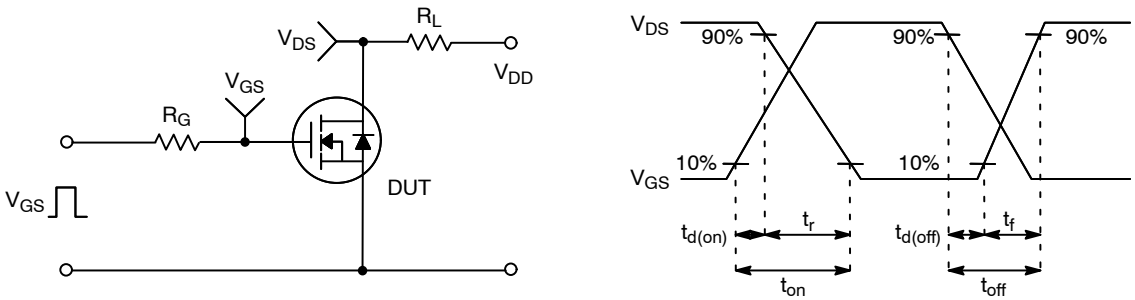

Figure 18. Resistive Switching Test Circuit & Waveforms

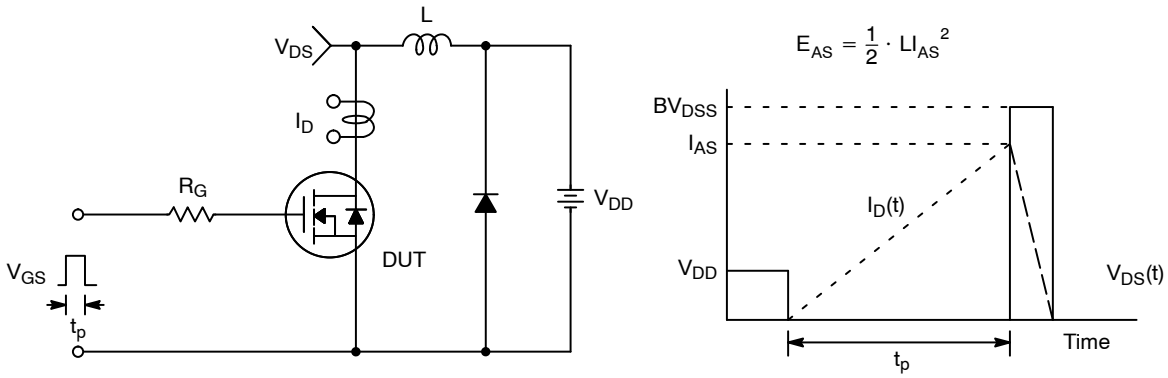

Figure 19. Unclamped Inductive Switching Test Circuit & Waveforms

Downloaded from Arrow.com.

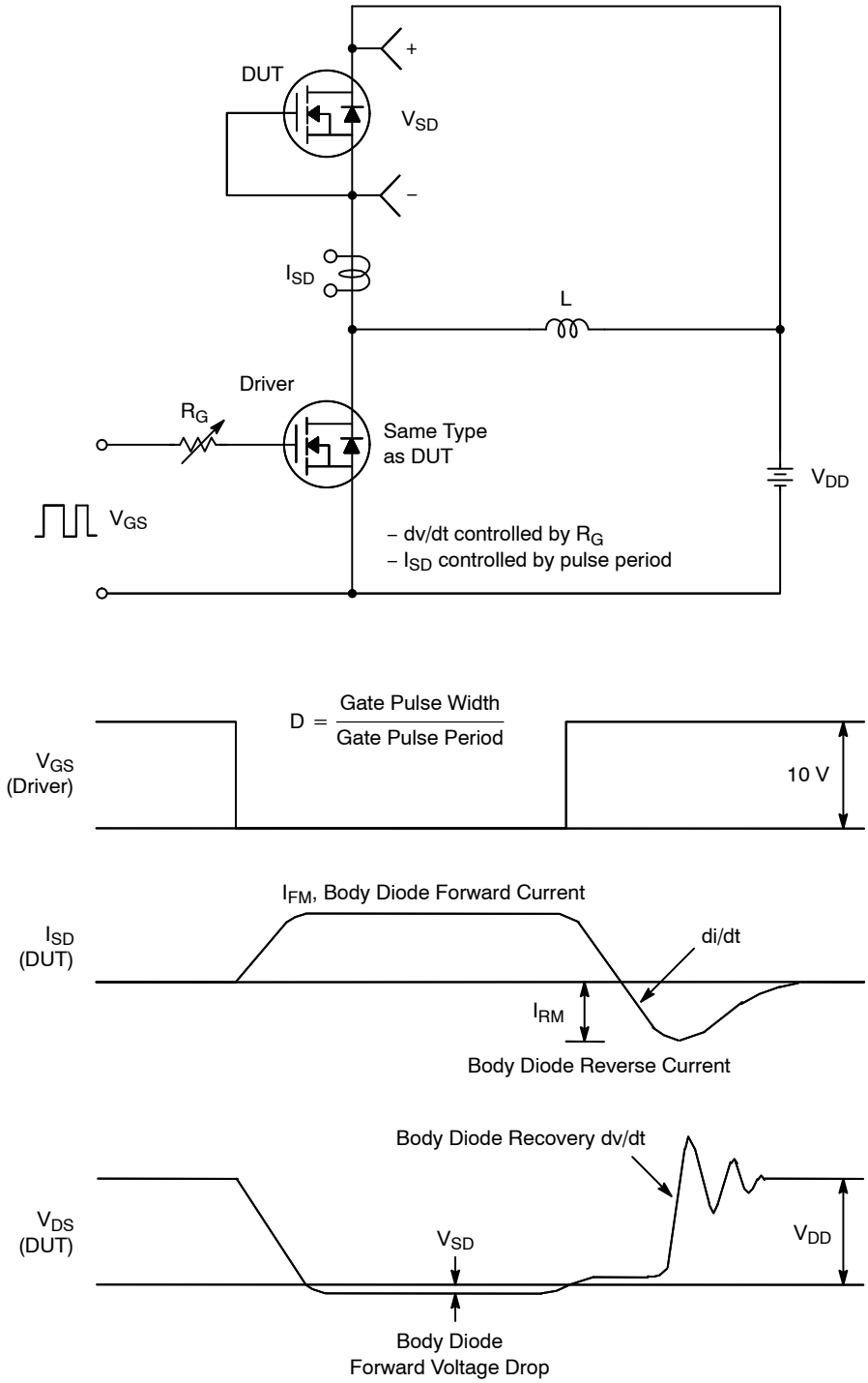

Figure 20. Peak Diode Recovery dv/dt Test Circuit & Waveforms

SUPERFET is a registered trademark of Semiconductor Components Industries, LLC (SCILLC) or its subsidiaries in the United States and/or other countries.

FRFET is a registered trademark of Semiconductor Components Industries, LLC (SCILLC) or its subsidiaries in the United States and/or other countries.

Downloaded from Arrow.com.

TO−247−3LD SHORT LEAD
CASE 340CK
ISSUE A

DATE 31 JAN 2019

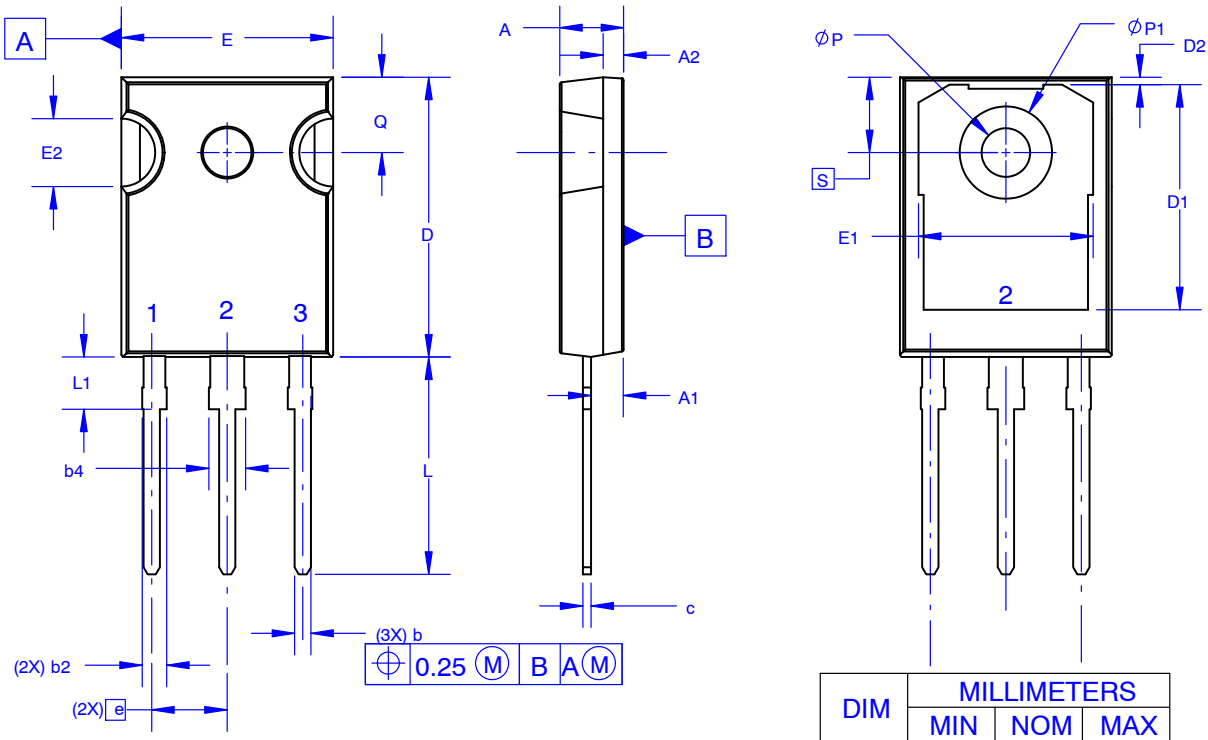

DIM	MILLIMETERS		
	MIN	NOM	MAX
A	4.58	4.70	4.82
A1	2.20	2.40	2.60
A2	1.40	1.50	1.60
b	1.17	1.26	1.35
b2	1.53	1.65	1.77
b4	2.42	2.54	2.66
c	0.51	0.61	0.71
D	20.32	20.57	20.82
D1	13.08	~	~
D2	0.51	0.93	1.35
E	15.37	15.62	15.87
E1	12.81	~	~
E2	4.96	5.08	5.20
e	~	5.56	~
L	15.75	16.00	16.25
L1	3.69	3.81	3.93
ØP	3.51	3.58	3.65
ØP1	6.60	6.80	7.00
Q	5.34	5.46	5.58
S	5.34	5.46	5.58

NOTES: UNLESS OTHERWISE SPECIFIED.

A. DIMENSIONS ARE EXCLUSIVE OF BURRS, MOLD FLASH, AND TIE BAR EXTRUSIONS.
B. ALL DIMENSIONS ARE IN MILLIMETERS.
C. DRAWING CONFORMS TO ASME Y14.5 - 2009.
D. DIMENSION A1 TO BE MEASURED IN THE REGION DEFINED BY L1.
E. LEAD FINISH IS UNCONTROLLED IN THE REGION DEFINED BY L1.

GENERIC
MARKING DIAGRAM*

AYWWZZ
XXXXXXX
XXXXXXX
▪

XXXX = Specific Device Code
A = Assembly Location
Y = Year
WW = Work Week
ZZ = Assembly Lot Code

*This information is generic. Please refer to device data sheet for actual part marking. Pb−Free indicator, "G" or microdot "▪", may or may not be present. Some products may not follow the Generic Marking.

DOCUMENT NUMBER:	98AON13851G	Electronic versions are uncontrolled except when accessed directly from the Document Repository. Printed versions are uncontrolled except when stamped "CONTROLLED COPY" in red.
DESCRIPTION:	TO−247−3LD SHORT LEAD	PAGE 1 OF 1

ON Semiconductor and ON are trademarks of Semiconductor Components Industries, LLC dba ON Semiconductor or its subsidiaries in the United States and/or other countries. ON Semiconductor reserves the right to make changes without further notice to any products herein. ON Semiconductor makes no warranty, representation or guarantee regarding the suitability of its products for any particular purpose, nor does ON Semiconductor assume any liability arising out of the application or use of any product or circuit, and specifically disclaims any and all liability, including without limitation special, consequential or incidental damages. ON Semiconductor does not convey any license under its patent rights nor the rights of others.

© Semiconductor Components Industries, LLC, 2018

Downloaded from Arrow.com.

onsemi, onsemi, and other names, marks, and brands are registered and/or common law trademarks of Semiconductor Components Industries, LLC dba "**onsemi**" or its affiliates and/or subsidiaries in the United States and/or other countries. **onsemi** owns the rights to a number of patents, trademarks, copyrights, trade secrets, and other intellectual property. A listing of **onsemi**'s product/patent coverage may be accessed at www.onsemi.com/site/pdf/Patent−Marking.pdf. **onsemi** reserves the right to make changes at any time to any products or information herein, without notice. The information herein is provided "as−is" and **onsemi** makes no warranty, representation or guarantee regarding the accuracy of the information, product features, availability, functionality, or suitability of its products for any particular purpose, nor does **onsemi** assume any liability arising out of the application or use of any product or circuit, and specifically disclaims any and all liability, including without limitation special, consequential or incidental damages. Buyer is responsible for its products and applications using **onsemi** products, including compliance with all laws, regulations and safety requirements or standards, regardless of any support or applications information provided by **onsemi**. "Typical" parameters which may be provided in **onsemi** data sheets and/or specifications can and do vary in different applications and actual performance may vary over time. All operating parameters, including "Typicals" must be validated for each customer application by customer's technical experts. **onsemi** does not convey any license under any of its intellectual property rights nor the rights of others. **onsemi** products are not designed, intended, or authorized for use as a critical component in life support systems or any FDA Class 3 medical devices or medical devices with a same or similar classification in a foreign jurisdiction or any devices intended for implantation in the human body. Should Buyer purchase or use **onsemi** products for any such unintended or unauthorized application, Buyer shall indemnify and hold **onsemi** and its officers, employees, subsidiaries, affiliates, and distributors harmless against all claims, costs, damages, and expenses, and reasonable attorney fees arising out of, directly or indirectly, any claim of personal injury or death associated with such unintended or unauthorized use, even if such claim alleges that **onsemi** was negligent regarding the design or manufacture of the part. **onsemi** is an Equal Opportunity/Affirmative Action Employer. This literature is subject to all applicable copyright laws and is not for resale in any manner.

ADDITIONAL INFORMATION

TECHNICAL PUBLICATIONS:
Technical Library: www.onsemi.com/design/resources/technical−documentation
onsemi Website: www.onsemi.com

ONLINE SUPPORT: www.onsemi.com/support
For additional information, please contact your local Sales Representative at www.onsemi.com/support/sales

Downloaded from Arrow.com.