THIS DRAWING IS UNPUBLISHED. RELEASED FOR PUBLICATION -
© COPYRIGHT copyright_date BY - ALL RIGHTS RESERVED.

REVISIONS

P	LTR	DESCRIPTION	DATE	DWN	APVD
	A	INITIAL RELEASE	28MAR2019	C.W	I.Y
	A1	ECR-20-000774	16JAN2020	C.W	E.J
	A2	SEE ECR-21-003354	19MAR2021	L.G	I.Y
	A3	ECN-24-254806	06MAR2024	J.S	Z.Z

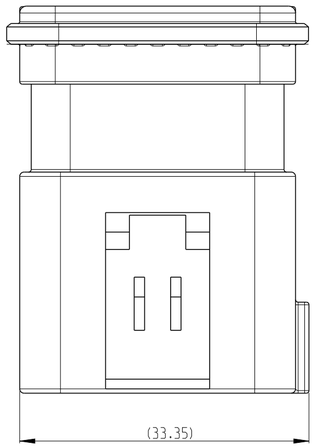

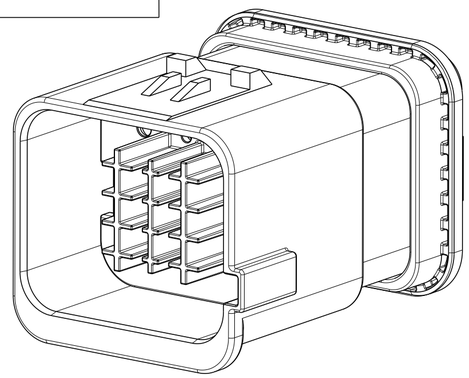

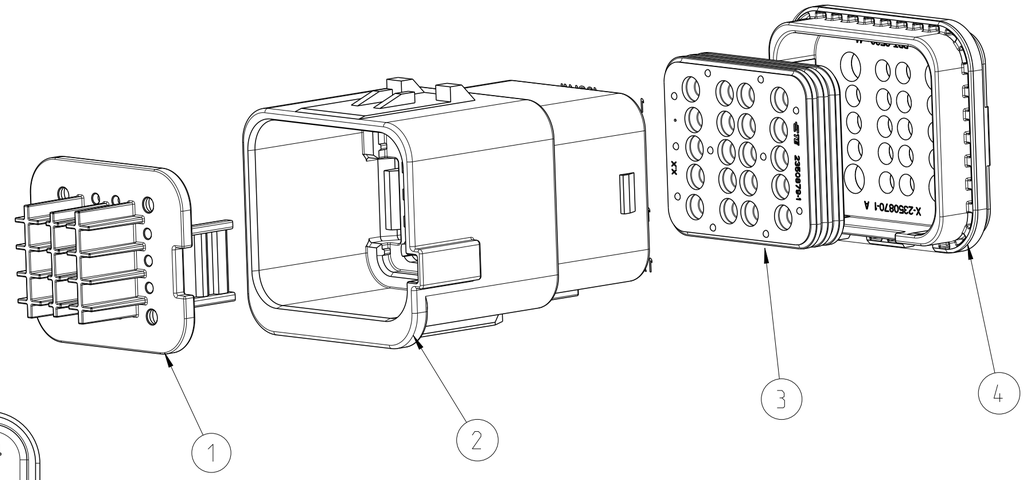

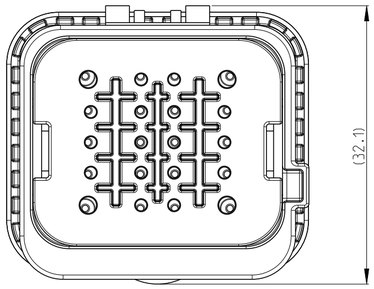

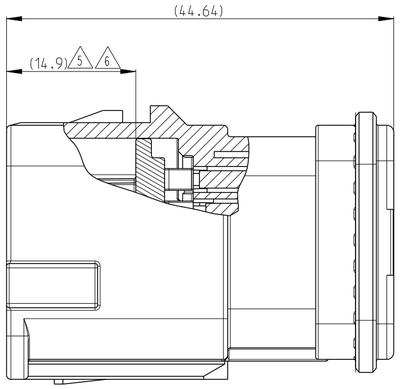

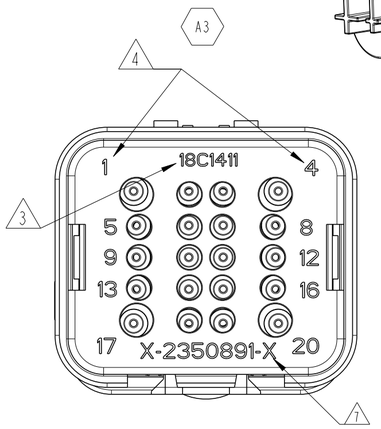

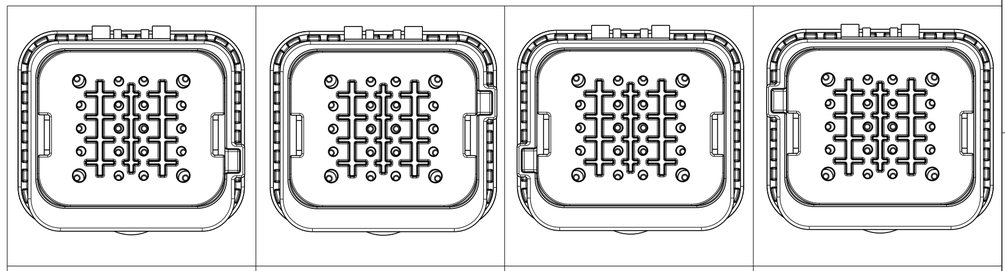

CODING A PN:2350891-1	CODING B PN:2350891-2	CODING C PN:2350891-3	CODING D PN:2350891-4

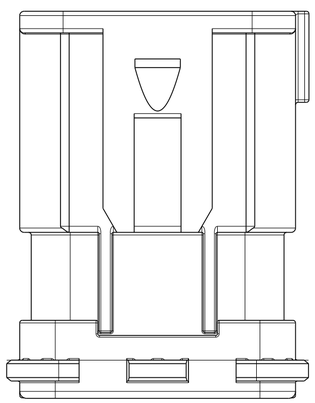

NOTES:

1. THIS PLUG MATES WITH TAB HOUSING ASSEMBLY PN 2350890-X, 1-2350890-X (X=1, 2, 3, 4 FOR VARIOUS CODE).

2. MATERIAL: HOUSING: PBT GF30, SEE PN TABLE FOR COLOR
   TPA: PBT GF30, YELLOW
   FRONT SEAL: VMQ(ORANGE)
   GROMMET:VMQ(RED)
   REAR CAP: PBT GF30, BLACK

3. DATE CODE: INDENTIFIES THE YEAR, MONTH, DAY AND HOUR OF ASSEMBLY.
   YEAR: FIRST AND SECOND DIGITS(17=2017)
   MONTH: THIRD DIGIT , EXCLUDING I , A=JAN, B=FEB, C=MARCH...(K=OCTOBER)
   DAY: FOURTH AND FIFTH DIGITS(14=14th DAY)
   HOUR: SIXTH AND SEVENTH DIGITS(11=11AM)

4. IDENTIFICATION FOR CABLE PINOUT.

5. TPA SEATED ON PRE-LOCK POSITION FOR DELIVERY.

6. PULL TPA TO PRE-LOCK BEFORE TERMINAL INSERTION IN CASE OF TPA BEING HIT TO END-LOCK POSITION.

7. PART NO.

8. REFER TO 114-151001 FOR DT SIZE 16 TERMINAL APPLICATION SPECIFICATION.
   REFER TO 114-151003 FOR DT SIZE 20 TERMINAL APPLICATION SPECIFICATION.
   APPLICABLE TERMINAL PART NUMBERS AND WIRE SIZE:

TERMINAL PN	WIRE SIZE (MM2)	INSULATION WIRES(MM)	PINOUT NUMBER
16#	0.5~2.5	∅1.40~∅3.00	1, 4, 17, 20
20#	0.5~1.5	∅1.40~∅2.40	OTHER PINS

9. 1-2350891-1/1-2350891-2/1-2350891-3/1-2350891-4 IS ASSEMBLIED WITH SUPPORT CUSTION ONLY FOR VIBRATION ENHANCEMENT(UNSEAL APPLICATION ON PANEL CUTOUT)

10. 2-2350891-1/2-2350891-2/2-2350891-3/2-2350891-4 IS ASSEMBLIED WITH FACIAL SEAL FOR VIBRATION AND SEAL APPLICATION ON PANEL CUTOUT

1	-	-	-	BLUE	PBT-GF30	REAR CAP	4
-	1	-	-	GREEN			
-	-	1	-	GRAY			
-	-	-	1	BLACK			
1	1	1	1	RED	VMQ	GROMMET	3
1	-	-	-	BLUE	PBT-GF30	HOUSING.CODE D	2
-	1	-	-	GREEN	PBT-GF30	HOUSING.CODE C	
-	-	1	-	GRAY	PBT-GF30	HOUSING.CODE B	
-	-	-	1	BLACK	PBT-GF30	HOUSING.CODE A	
1	1	1	1	YELLOW	PBT-GF30	TPA	1
QTY. REQUEST PER ASSY				COLOR	MATERIAL	DESCRIPTION	ITEM NO
27.8	27.8	27.8	27.8	WEIGHT OF EACH ASSY(g)			
A	A	A	A	REVISION OF EACH ASSY NO.			
2350891-4	2350891-3	2350891-2	2350891-1	TE ASSEMBLY PN			

THIS DRAWING IS A CONTROLLED DOCUMENT.

DIMENSIONS: mm

TOLERANCES UNLESS OTHERWISE SPECIFIED:
0 PLC ±-
1 PLC ±0.2
2 PLC ±0.25
3 PLC ±-
4 PLC ±-
ANGLES ±-

MATERIAL -
FINISH -

DWN C.WAN 02MAR2019
CHK E.JIANG 28MAR2019
APVD L.YIN 02MAR2019
PRODUCT SPEC 108-101662
APPLICATION SPEC 114-32209
WEIGHT -

TE Connectivity

NAME
NTS 20POS TAB HOUSING ASSEMLBY
DEUTSCH TERMINAL HYBRID CONNECTOR

SIZE A2 | CAGE CODE 00779 | DRAWING NO C-2350891 | RESTRICTED TO -

CUSTOMER DRAWING | SCALE 1:1 | SHEET 1 OF 2 | REV A3

1471-9 (3/13)

Downloaded from Arrow.com.

THIS DRAWING IS UNPUBLISHED. RELEASED FOR PUBLICATION -
© COPYRIGHT copyright_date BY - ALL RIGHTS RESERVED.

REVISIONS					
P	LTR	DESCRIPTION	DATE	DWN	APVD
		SEE SHEET 1			

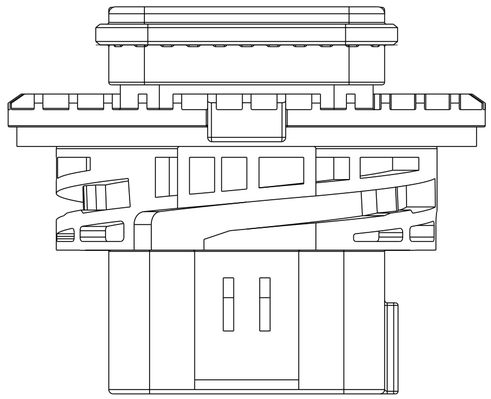

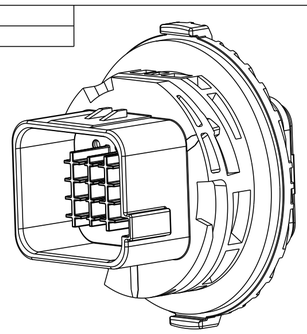

CUSHION VERSION
1-2350891-1
1-2350891-2
1-2350891-3
1-2350891-4

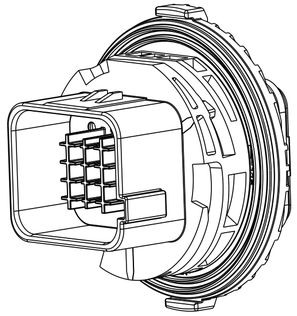

FACIAL SEAL VERSION
2-2350891-1
2-2350891-2
2-2350891-3
2-2350891-4

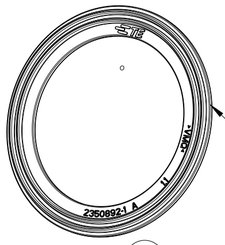

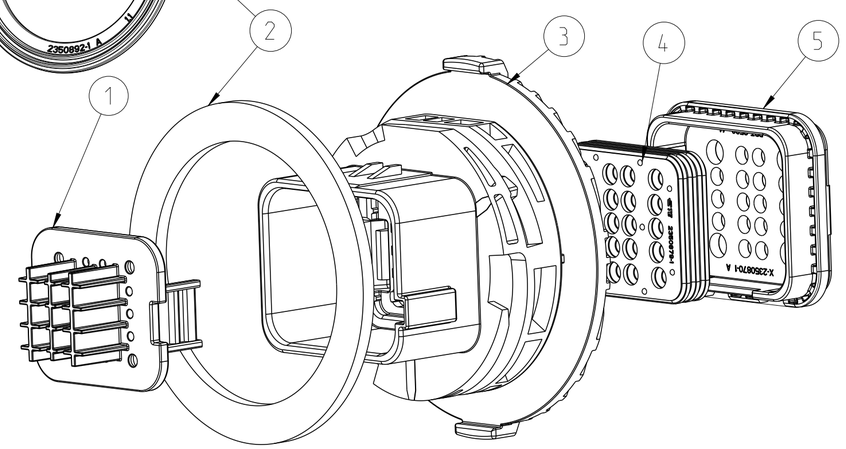

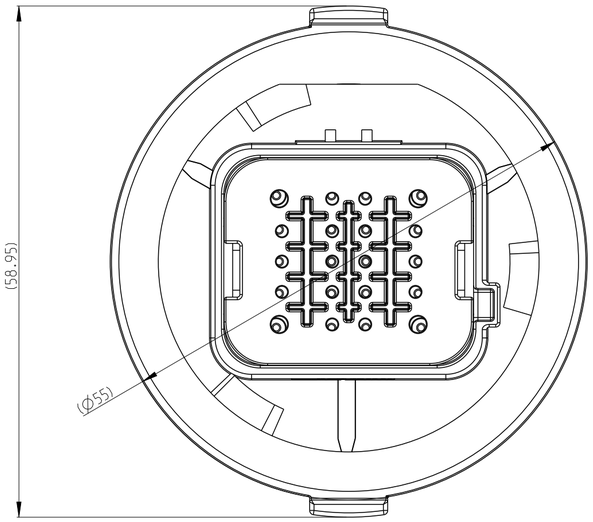

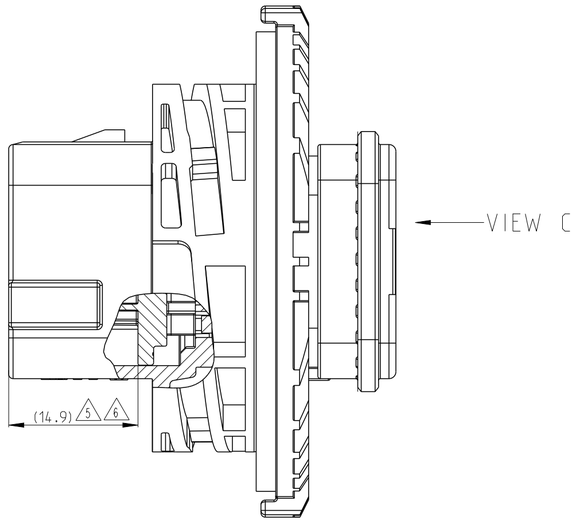

SECTION A-A

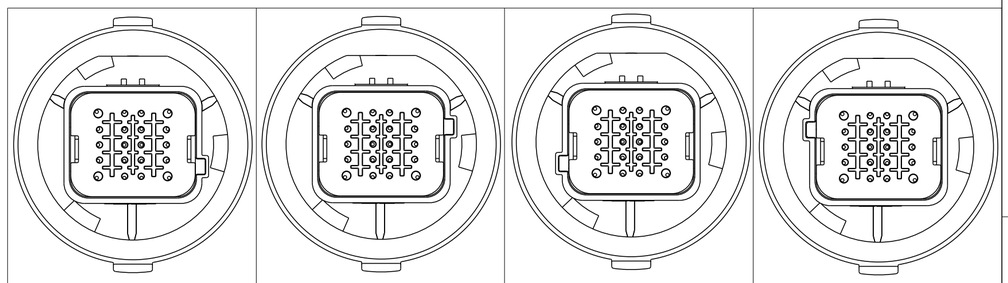

CODING A	CODING B	CODING C	CODING D
PN:1-2350891-1 2-2350891-1	PN:1-2350891-2 2-2350891-2	PN:1-2350891-3 2-2350891-3	PN:1-2350891-4 2-2350891-4

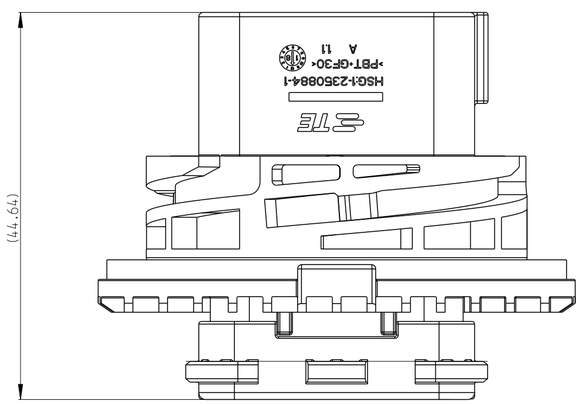

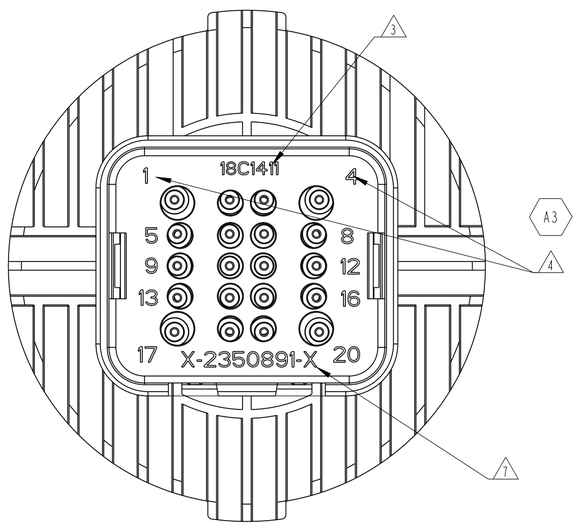

VIEW C

QTY. REQUEST PER ASSY								COLOR	MATERIAL	DESCRIPTION	ITEM NO
1	-	-	-	1	-	-	-	BLUE	PBT-GF30	REAR CAP	5
-	1	-	-	-	1	-	-	GREEN			
-	-	1	-	-	-	1	-	GRAY			
-	-	-	1	-	-	-	1	BLACK			
1	1	1	1	1	1	1	1	RED	VMQ	GROMMET	4
1	-	-	-	1	-	-	-	BLUE	PBT-GF30	HOUSING,CODE D	3
-	1	-	-	-	1	-	-	GREEN	PBT-GF30	HOUSING,CODE C	
-	-	1	-	-	-	1	-	GRAY	PBT-GF30	HOUSING,CODE B	
-	-	-	1	-	-	-	1	BLACK	PBT-GF30	HOUSING,CODE A	
-	-	-	-	1	1	1	1	BLACK	EPDM	CUSHION	2
1	1	1	1	-	-	-	-	RED	VMQ	FACIAL SEAL	
1	1	1	1	1	1	1	1	YELLOW	PBT-GF30	TPA	1
42.4	42.4	42.4	42.4	42.7	42.7	42.7	42.7	WEIGHT OF EACH ASSY(g)			
A	A	A	A	A	A	A	A	REVISION OF EACH ASSY NO.			
2--4	2--3	2--2	2--1	1--4	1--3	1--2	1--1	TE ASSEMBLY PN			

THIS DRAWING IS A CONTROLLED DOCUMENT.

DIMENSIONS: mm

TOLERANCES UNLESS OTHERWISE SPECIFIED:
0 PLC ±-
1 PLC ±0.2
2 PLC ±0.25
3 PLC ±-
4 PLC ±-
ANGLES ±-

MATERIAL - -
FINISH - -

DWN C.WAN 02MAR2019
CHK E.JIANG 28MAR2019
APVD I.YIN 02MAR2019
PRODUCT SPEC 108-101662
APPLICATION SPEC -
WEIGHT -

TE Connectivity

NAME
NTS 20POS TAB HOUSING ASSEMLBY
DEUTSCH TERMINAL HYBRID CONNECTOR

SIZE	CAGE CODE	DRAWING NO	RESTRICTED TO
A2	00779	C-2350891	-

CUSTOMER DRAWING | SCALE 2:1 | SHEET 2 OF 2 | REV A3

1471-9 (3/13)

Downloaded from Arrow.com.