# CT415 and CT416

## XtremeSense™ TMR Current Sensor with Ultra-Low Noise

# Not for New Design

The CT415 and CT416 are in production but has been determined to be NOT FOR NEW DESIGN. This classification indicates that sale of these devices are currently restricted to existing customer applications. These devices should not be purchased for new design applications because obsolescence in the near future is probable. Samples are no longer available.

Date of status change: March 28, 2025

**Recommended Substitutions:**

*For existing customer transition, and for new customers or new applications, refer to CT417 and CT418.*

NOTE: For detailed information on purchasing options, contact your local Allegro field applications engineer or sales representative.

*Allegro MicroSystems reserves the right to make, from time to time, revisions to the anticipated product life cycle plan for a product to accommodate changes in production capabilities, alternative product availabilities, or market demand. The information included herein is believed to be accurate and reliable. However, Allegro MicroSystems assumes no responsibility for its use; nor for any infringements of patents or other rights of third parties which may result from its use.*

Downloaded from Arrow.com.

# CT415 and CT416

## XtremeSense™ TMR Current Sensor with Ultra-Low Noise

## FEATURES AND BENEFITS

- Integrated contact current sensing for low to medium current ranges
- Integrated current-carrying conductor (CCC)
- Linear analog output voltage
- 1 MHz bandwidth
- Response time: 300 ns
- UL/IEC 62368-1
  - □ Rated isolation voltage: 2.5 $kV_{RMS}$
  - □ Working voltage for basic isolation: 560 $V_{RMS}$
  - □ Working voltage for reinforced isolation: 280 $V_{RMS}$
- Low noise: 9 to 19 $mA_{RMS}$ @ $f_{BW}$ = 100 kHz
- 3.3 V and 5 V supply voltage variants
- Immunity to common-mode fields
- Filter function to reduce noise on output pin
- AEC-Q100 Grade 1, automotive qualified
- 8-lead SOIC package

## PACKAGE

8-pin SOIC (SOIC-8)

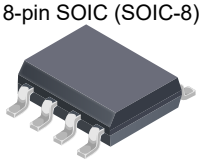

Not to scale

## DESCRIPTION

The CT415 and CT416 are high-bandwidth, ultralow-noise integrated contact current sensors that use Allegro patented XtremeSense™ tunneling magnetoresistive (TMR) technology to enable high-accuracy current measurements for industrial, consumer, and automotive applications. These devices support eight current ranges, and the integrated current-carrying conductor (CCC) of these devices handles up to 65 A of current and generates a current measurement as a linear analog output voltage.

The CT415 and CT416 have a 300 ns output response time, a current consumption of 6 mA, and are immune to common-mode fields. These devices also have a filter function to reduce the noise on the output pin.

The CT415 and CT416 are offered in an industry-standard 8-lead small-outline integrated circuit (SOIC) package that is green and restriction of hazardous substances (RoHS) compliant.

## APPLICATIONS

- Solar/power inverters
- UPS, SMPS, and telecom power supplies
- Battery management systems
- Motor control
- Power utility meter

TÜV Certificate No.: R 72226133 0001

UL Certificate No.: UL-CA-2201235-0

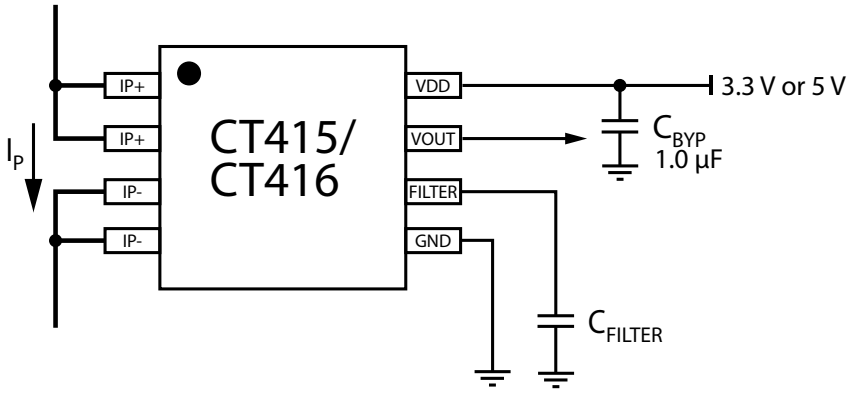


**Figure 1: Typical Application Circuit of CT415 and CT416**

**The sensor outputs an analog signal, $V_{OUT}$, that varies linearly with the primary current, $I_P$ , within the specified ranges.**




Downloaded from Arrow.com.

## SELECTION GUIDE

| Part Number | Current Range ($I_{PMAX}$) (A) | Operating Voltage (V) | Sensitivity (mV/A) | Operating Temperature Range (°C) | Package | Packing |
|---|---|---|---|---|---|---|
| CT415-HSN820MR | ±20 | 5.0 | 100.0 | –40 to 125 | 8-lead SOIC 4.89 mm × 6.00 mm × 1.62 mm | Tape and Reel |
| CT416-HSN820MR | ±20 | 3.3 | 50.0 | | | |
| CT415-HSN830MR | ±30 | 5.0 | 66.7 | | | |
| CT416-HSN830MR | ±30 | 3.3 | 33.3 | | | |
| CT415-HSN840MR | ±40 | 5.0 | 50.0 | | | |
| CT415-HSN850MR | ±50 | 5.0 | 40.0 | | | |
| CT416-HSN850MR | ±50 | 3.3 | 20.0 | | | |
| CT415-HSN865MR | ±65 | 5.0 | 30.8 | | | |
| CT416-HSN865MR | ±65 | 3.3 | 15.4 | | | |
| CT415-HSN820DR | 20 | 5.0 | 200.0 | | | |
| CT416-HSN820DR | 20 | 3.3 | 100.0 | | | |
| CT415-HSN830DR | 30 | 5.0 | 133.3 | | | |
| CT416-HSN830DR | 30 | 3.3 | 66.7 | | | |
| CT415-HSN850DR | 50 | 5.0 | 80.0 | | | |
| CT416-HSN850DR | 50 | 3.3 | 40.0 | | | |
| CT415-HSN865DR | 65 | 5.0 | 61.5 | | | |
| CT416-HSN865DR | 65 | 3.3 | 30.8 | | | |
| CT415-ASN820MR | ±20 | 5.0 | 100.0 | AEC-Q100 Grade 1 –40 to 125 | | |
| CT416-ASN820MR | ±20 | 3.3 | 50.0 | | | |
| CT415-ASN830MR | ±30 | 5.0 | 66.7 | | | |
| CT416-ASN830MR | ±30 | 3.3 | 33.3 | | | |
| CT415-ASN850MR | ±50 | 5.0 | 40.0 | | | |
| CT416-ASN850MR | ±50 | 3.3 | 20.0 | | | |
| CT415-ASN865MR | ±65 | 5.0 | 30.8 | | | |
| CT416-ASN865MR | ±65 | 3.3 | 15.4 | | | |
| CT415-ASN820DR | 20 | 5.0 | 200.0 | | | |
| CT416-ASN820DR | 20 | 3.3 | 100.0 | | | |
| CT415-ASN830DR | 30 | 5.0 | 133.3 | | | |
| CT416-ASN830DR | 30 | 3.3 | 66.7 | | | |
| CT415-ASN850DR | 50 | 5.0 | 80.0 | | | |
| CT416-ASN850DR | 50 | 3.3 | 40.0 | | | |
| CT415-ASN865DR | 65 | 5.0 | 61.5 | | | |
| CT416-ASN865DR | 65 | 3.3 | 30.8 | | | |



Allegro MicroSystems
955 Perimeter Road
Manchester, NH 03103-3353 U.S.A.
www.allegromicro.com

Downloaded from Arrow.com.

## PART NAMING SPECIFICATION

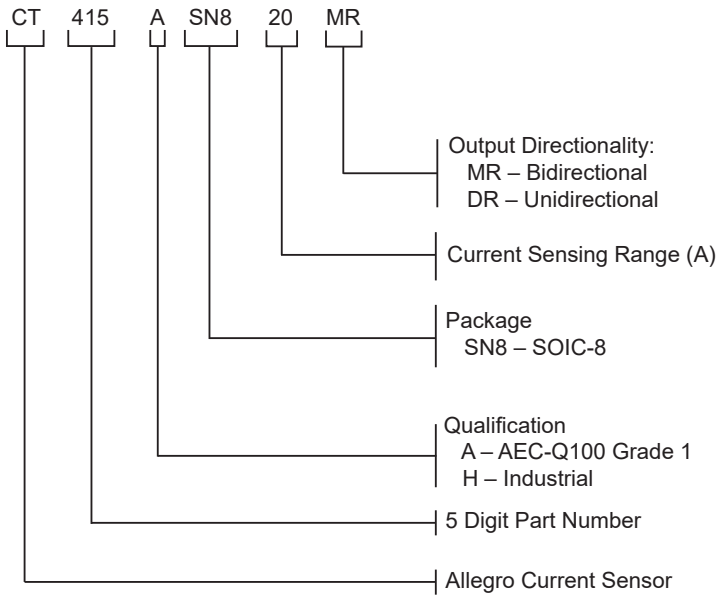


## Table of Contents

Features and Benefits ..... 1
Description ..... 1
Applications ..... 1
Package ..... 1
Typical Application Circuit ..... 1
Selection Guide ..... 2
Part Naming Specification ..... 3
Absolute Maximum Ratings ..... 4
Package Characteristics ..... 4
Isolation Characteristics ..... 4
Pinout Diagram and Terminal List ..... 5
Functional Block Diagram ..... 5
Common Electrical Characteristics ..... 6
Performance Characteristics ..... 7
Characteristic Performance ..... 24
Common Characteristic Performance ..... 25
Response Characteristics Definitions and Performance Data ..... 26
Definitions of Operating and Performance Characteristics ..... 27
Package Outline Drawing ..... 30
Tape and Reel Pocket Drawing and Dimensions ..... 31
Device Marking ..... 32
Revision History ..... 33



Allegro MicroSystems
955 Perimeter Road
Manchester, NH 03103-3353 U.S.A.
www.allegromicro.com

Downloaded from Arrow.com.

## ABSOLUTE MAXIMUM RATINGS [1]

| Characteristic | Symbol | Notes | Min. | Max. | Unit |
|---|---|---|---|---|---|
| Supply Voltage | $V_{DD}$ | | –0.3 | 6.0 | V |
| Output Voltage | $V_O$ | Applies to VOUT | –0.3 | ($V_{DD}$+0.3)<6 | V |
| Input Current | $I_P$ | A current above this value can cause a permanent drift in sensitivity and quiescent output voltage beyond the limits of the datasheet. | – | 350 | A |
| Operating Ambient Temperature | $T_A$ | | –40 | 125 | °C |
| Storage Temperature | $T_{STG}$ | | –65 | 150 | °C |
| Junction Temperature | $T_J$ | | – | 150 | °C |

[1] Stresses that exceed those listed in the absolute maximum ratings might cause permanent damage to the device. This is a stress rating only; functional operation of the device at these or any other conditions that exceed those indicated in the operational sections of this specification is not implied. Exposure to absolute maximum ratings for extended periods might affect device reliability.

## PACKAGE CHARACTERISTICS

| Characteristic | Symbol | Notes | Min. | Typ. | Max. | Unit |
|---|---|---|---|---|---|---|
| Internal Conductor Resistance | $R_{IC}$ | $T_A$ = 25°C | – | 1 | – | mΩ |
| Internal Conductor Inductance | $L_{IC}$ | $T_A$ = 25°C | – | 4.2 | – | nH |
| Moisture Sensitivity Level | MSL | Per IPC/JEDEC J-STD-020 | – | 3 | – | – |

## ISOLATION CHARACTERISTICS

| Characteristic | Symbol | Notes | Rating | Unit |
|---|---|---|---|---|
| Withstand Voltage [1] | $V_{ISO}$ | Agency rated for 60 seconds per UL 62368-1 (edition 3) | 3500 | $V_{RMS}$ |
| Working Voltage for Basic Isolation | $V_{WVBI}$ | Maximum approved working voltage for basic (single) isolation according to UL 62368-1 (edition 3) | 792 | $V_{PK\ or}\ V_{DC}$ |
| | | | 560 | $V_{RMS}$ |
| Working Voltage for Reinforced Isolation | $V_{WVRI}$ | Maximum approved working voltage for reinforced isolation according to UL 62368-1 (edition 3) | 396 | $V_{PK\ or}\ V_{DC}$ |
| | | | 280 | $V_{RMS}$ |
| Impulse Voltage | $V_{IMPULSE}$ | 1.2 µs/50 µs waveform, tested in air | 5000 | $V_{PK}$ |
| Clearance | $D_{CL}$ | Minimum distance through air from IP leads to signal leads | 4 | mm |
| Creepage | $D_{CR}$ | Minimum distance along package body from IP leads to signal leads | 4 | mm |
| Distance Through Insulation | DTI | Minimum internal distance through insulation | 110 | µm |
| Comparative Tracking Index | CTI | Material Group II | 400 to 599 | V |

[1] Production tested for 1 second in accordance with UL 62368-1 (edition 3).



Allegro MicroSystems
955 Perimeter Road
Manchester, NH 03103-3353 U.S.A.
www.allegromicro.com

Downloaded from Arrow.com.

## PINOUT DIAGRAM AND TERMINAL LIST

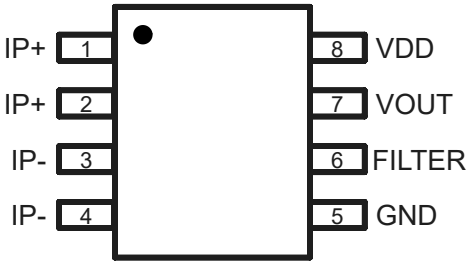


**Figure 2: CT415 and CT416 Pinout Diagram for 8-Lead SOIC Package (Top-Down View)**

**Terminal List**

| Number | Name | Function |
|---|---|---|
| 1, 2 | IP+ | Positive terminal for current being sensed |
| 3, 4 | IP– | Negative terminal for current being sensed |
| 5 | GND | Device ground terminal |
| 6 | FILTER | Filter pin to improve noise performance by connecting an external capacitor to set the cutoff frequency. Do not connect if the FILTER pin is not used. |
| 7 | VOUT | Analog output voltage |
| 8 | VDD | Device power supply terminal |

## FUNCTIONAL BLOCK DIAGRAM

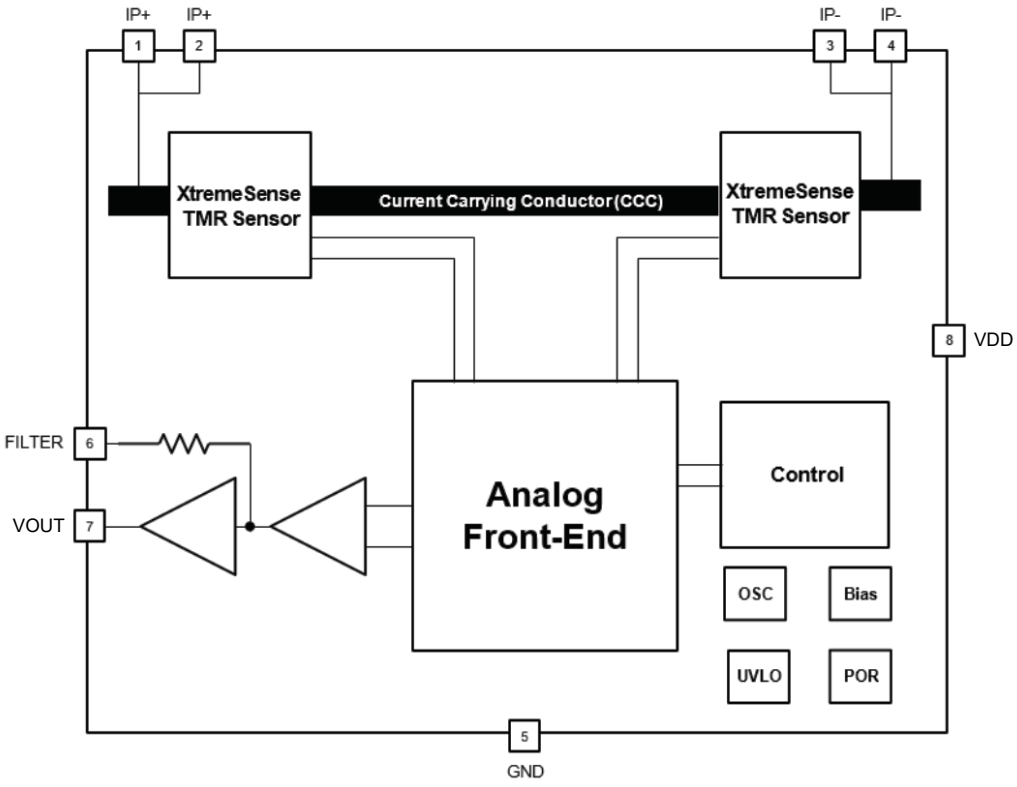


**Figure 3: CT415 and CT416 Functional Block Diagram for Eight-Lead SOIC Package**



Allegro MicroSystems
955 Perimeter Road
Manchester, NH 03103-3353 U.S.A.
www.allegromicro.com

Downloaded from Arrow.com.

**COMMON ELECTRICAL CHARACTERISTICS:** Valid over full operating temperature range, $V_{DD} = V_{DD(Typ.)}$, $C_{BYP}$ = 1.0 µF

| Characteristics | Symbol | Test Conditions | Min. | Typ. | Max. | Unit |
|---|---|---|---|---|---|---|
| **POWER SUPPLIES** | | | | | | |
| Supply Current | $I_{DD}$ | VOUT open, $I_P$ = 0 A | – | 6 | 9 | mA |
| VOUT Maximum Drive Capability [1] | $I_{OUT}$ | VOUT covers 10% to 90% of $V_{DD}$ span | –1 | – | 1 | mA |
| Supply Bypass Capacitor | $C_{BYPASS}$ | | 1 | – | – | µF |
| Output Resistive Load [1] | $R_{L_VOUT}$ | Resistance between VOUT and GND | 100 | – | – | kΩ |
| Output Capacitive Load [1] | $C_{L_VOUT}$ | Capacitance between VOUT and GND | – | – | 100 | pF |
| Sensitivity Power Supply Rejection Ratio [1] | $PSRR_S$ | | – | 35 | – | dB |
| Offset Power Supply Rejection Ratio [1] | $PSRR_O$ | | – | 40 | – | dB |
| **OUTPUT SIGNAL CHARACTERISTICS (VOUT)** | | | | | | |
| Output Operating Range | $V_{OOR}$ | 5 V supply voltage (CT415) | 0.5 | – | 4.5 | V |
| | | 3.3 V supply voltage (CT416) | 0.65 | – | 2.65 | V |
| Bandwidth | BW | Small signal –3 dB | 1 | – | – | MHz |
| Common Mode Field Rejection [1] | CMFR | | – | 0.5 | – | mA/G |
| Internal Filter Resistance [1] | $R_{FILTER}$ | | – | 15 | – | kΩ |
| **TIMINGS** | | | | | | |
| Power-On Delay [1] | $t_{PO}$ | $V_{DD} \geq 2.5$ V | – | 100 | 200 | µs |
| Rise Time [1] | $t_R$ | $I_P = I_{RANGE(MAX)}$, $T_A$ = 25°C, $C_{L_VOUT}$ = 100 pF | – | 200 | – | ns |
| Response Time [1] | $t_{RESP}$ | $I_P = I_{RANGE(MAX)}$, $T_A$ = 25°C, $C_{L_VOUT}$ = 100 pF | – | 300 | – | ns |
| Propagation Delay [1] | $t_{PD}$ | $I_P = I_{RANGE(MAX)}$, $T_A$ = 25°C, $C_{L_VOUT}$ = 100 pF | – | 250 | – | ns |
| **PROTECTION** | | | | | | |
| Undervoltage Lockout Voltage | $V_{UVLO}$ | Rising $V_{DD}$ | – | 2.5 | – | V |
| | | Falling $V_{DD}$ | – | 2.45 | – | V |
| UVLO Hysteresis | $V_{UV_HYS}$ | | – | 50 | – | mV |

[1] Validated by design and characterization.



Allegro MicroSystems
955 Perimeter Road
Manchester, NH 03103-3353 U.S.A.
www.allegromicro.com

Downloaded from Arrow.com.

**CT415-xSN820MR: ±20 A – PERFORMANCE CHARACTERISTICS:** Valid for $V_{DD}$ = 4.75 to 5.5 V, $C_{BYP}$ = 1.0 µF, and $T_A$ = –40°C to 125°C, unless otherwise specified

| Characteristics | Symbol | Test Conditions | Min. | Typ.[1] | Max. | Unit |
|---|---|---|---|---|---|---|
| Current Range | $I_{PR}$ | Limited by $T_{J(MAX)}$ = 150°C | –20 | – | 20 | A |
| Quiescent Voltage Output | $V_{QVO}$ | $T_A$ = 25°C, $I_P$ = 0 A | – | 2.5 | – | V |
| Sensitivity | Sens | $I_{PR(MIN)} < I_P < I_{PR(MAX)}$ | – | 100.0 | – | mV/A |
| Noise [3] | N | $T_A$ = 25°C, BW = 100 kHz, $I_P$ = 0 A | – | 9.9 | – | $mA_{RMS}$ |
| **VOUT ACCURACY PERFORMANCE** | | | | | | |
| Linearity Error | $E_{LIN}$ | $I_P = I_{PR(MAX)}$, $T_A$ = –40°C to 125°C | – | ±0.3 | – | % FS |
| Sensitivity Error | $E_{SENS}$ | $I_P = I_{PR(MAX)}$, $T_A$ = 25°C | – | ±1.0 | – | % |
| | | $I_P = I_{PR(MAX)}$, $T_A$ = –40°C to 125°C | – | ±2.9 | – | % |
| Offset Voltage Error | $V_{QVO_E}$ | $I_P$ = 0 A, $T_A$ = 25°C | – | ±6 | – | mV |
| | | $I_P$ = 0 A, $T_A$ = –40°C to 125°C | – | ±39 | – | mV |
| **LIFETIME DRIFT** | | | | | | |
| Sensitivity Error Including Lifetime Drift | $E_{SENS_LT}$ | $I_P = I_{PR(MAX)}$, $T_A$ = –40°C to 125°C | – | ±3.3 | – | % |
| Offset Voltage Error Including Lifetime Drift | $V_{QVO_LT}$ | $I_P$ = 0 A, $T_A$ = –40°C to 125°C | – | ±47 | – | mV |

[1] Typical values are the mean ±3 sigma of production distributions.
[2] Lifetime drift characteristics are based on a statistical combination of production distributions and worst-case distribution drift observed during AEC-Q100 qualification.
[3] Validated by design and characterization.



Allegro MicroSystems
955 Perimeter Road
Manchester, NH 03103-3353 U.S.A.
www.allegromicro.com

Downloaded from Arrow.com.

**CT416-xSN820MR: ±20 A – PERFORMANCE CHARACTERISTICS:** Valid for $V_{DD}$ = 3.0 to 3.6 V, $C_{BYP}$ = 1.0 µF, and $T_A$ = –40°C to 125°C, unless otherwise specified

| Characteristics | Symbol | Test Conditions | Min. | Typ.[1] | Max. | Unit |
|---|---|---|---|---|---|---|
| Current Range | $I_{PR}$ | Limited by $T_{J(MAX)}$ = 150°C | –20 | – | 20 | A |
| Quiescent Voltage Output | $V_{QVO}$ | $T_A$ = 25°C, $I_P$ = 0 A | – | 1.65 | – | V |
| Sensitivity | Sens | $I_{PR(MIN)} < I_P < I_{PR(MAX)}$ | – | 50.0 | – | mV/A |
| Noise [3] | N | $T_A$ = 25°C, BW = 100 kHz, $I_P$ = 0 A | – | 11.8 | – | $mA_{RMS}$ |
| **VOUT ACCURACY PERFORMANCE** | | | | | | |
| Linearity Error | $E_{LIN}$ | $I_P = I_{PR(MAX)}$, $T_A$ = –40°C to 125°C | – | ±0.3 | – | % FS |
| Sensitivity Error | $E_{SENS}$ | $I_P = I_{PR(MAX)}$, $T_A$ = 25°C | – | ±1.0 | – | % |
| | | $I_P = I_{PR(MAX)}$, $T_A$ = –40°C to 125°C | – | ±2.9 | – | % |
| Offset Voltage Error | $V_{QVO_E}$ | $I_P$ = 0 A, $T_A$ = 25°C | – | ±6 | – | mV |
| | | $I_P$ = 0 A, $T_A$ = –40°C to 125°C | – | ±23 | – | mV |
| **LIFETIME DRIFT** | | | | | | |
| Sensitivity Error Including Lifetime Drift | $E_{SENS_LT}$ | $I_P = I_{PR(MAX)}$, $T_A$ = –40°C to 125°C | – | ±3.7 | – | % |
| Offset Voltage Error Including Lifetime Drift | $V_{QVO_LT}$ | $I_P$ = 0 A, $T_A$ = –40°C to 125°C | – | ±28 | – | mV |

[1] Typical values are the mean ±3 sigma of production distributions.
[2] Lifetime drift characteristics are based on a statistical combination of production distributions and worst-case distribution drift observed during AEC-Q100 qualification.
[3] Validated by design and characterization.



Allegro MicroSystems
955 Perimeter Road
Manchester, NH 03103-3353 U.S.A.
www.allegromicro.com

Downloaded from Arrow.com.

**CT415-xSN830MR: ±30 A – PERFORMANCE CHARACTERISTICS:** Valid for $V_{DD}$ = 4.75 to 5.5 V, $C_{BYP}$ = 1.0 µF, and $T_A$ = –40°C to 125°C, unless otherwise specified

| Characteristics | Symbol | Test Conditions | Min. | Typ.[1] | Max. | Unit |
|---|---|---|---|---|---|---|
| Current Range | $I_{PR}$ | Limited by $T_{J(MAX)}$ = 150°C | –30 | – | 30 | A |
| Quiescent Voltage Output | $V_{QVO}$ | $T_A$ = 25°C, $I_P$ = 0 A | – | 2.5 | – | V |
| Sensitivity | Sens | $I_{PR(MIN)} < I_P < I_{PR(MAX)}$ | – | 66.7 | – | mV/A |
| Noise [3] | N | $T_A$ = 25°C, BW = 100 kHz, $I_P$ = 0 A | – | 10.8 | – | $mA_{RMS}$ |
| **VOUT ACCURACY PERFORMANCE** | | | | | | |
| Linearity Error | $E_{LIN}$ | $I_P = I_{PR(MAX)}$, $T_A$ = –40°C to 125°C | – | ±0.3 | – | % FS |
| Sensitivity Error | $E_{SENS}$ | $I_P = I_{PR(MAX)}$, $T_A$ = 25°C | – | ±1.0 | – | % |
| | | $I_P = I_{PR(MAX)}$, $T_A$ = –40°C to 125°C | – | ±2.9 | – | % |
| Offset Voltage Error | $V_{QVO_E}$ | $I_P$ = 0 A, $T_A$ = 25°C | – | ±6 | – | mV |
| | | $I_P$ = 0 A, $T_A$ = –40°C to 125°C | – | ±28 | – | mV |
| **LIFETIME DRIFT** | | | | | | |
| Sensitivity Error Including Lifetime Drift | $E_{SENS_LT}$ | $I_P = I_{PR(MAX)}$, $T_A$ = –40°C to 125°C | – | ±3.3 | – | % |
| Offset Voltage Error Including Lifetime Drift | $V_{QVO_LT}$ | $I_P$ = 0 A, $T_A$ = –40°C to 125°C | – | ±37 | – | mV |

[1] Typical values are the mean ±3 sigma of production distributions.
[2] Lifetime drift characteristics are based on a statistical combination of production distributions and worst-case distribution drift observed during AEC-Q100 qualification.
[3] Validated by design and characterization.



Allegro MicroSystems
955 Perimeter Road
Manchester, NH 03103-3353 U.S.A.
www.allegromicro.com

Downloaded from Arrow.com.

**CT416-xSN830MR: ±30 A – PERFORMANCE CHARACTERISTICS:** Valid for $V_{DD}$ = 3.0 to 3.6 V, $C_{BYP}$ = 1.0 µF, and $T_A$ = –40°C to 125°C, unless otherwise specified

| Characteristics | Symbol | Test Conditions | Min. | Typ.[1] | Max. | Unit |
|---|---|---|---|---|---|---|
| Current Range | $I_{PR}$ | Limited by $T_{J(MAX)}$ = 150°C | –30 | – | 30 | A |
| Quiescent Voltage Output | $V_{QVO}$ | $T_A$ = 25°C, $I_P$ = 0 A | – | 1.65 | – | V |
| Sensitivity | Sens | $I_{PR(MIN)} < I_P < I_{PR(MAX)}$ | – | 33.3 | – | mV/A |
| Noise [3] | N | $T_A$ = 25°C, BW = 100 kHz, $I_P$ = 0 A | – | 13.7 | – | $mA_{RMS}$ |
| **VOUT ACCURACY PERFORMANCE** | | | | | | |
| Linearity Error | $E_{LIN}$ | $I_P = I_{PR(MAX)}$, $T_A$ = –40°C to 125°C | – | ±0.3 | – | % FS |
| Sensitivity Error | $E_{SENS}$ | $I_P = I_{PR(MAX)}$, $T_A$ = 25°C | – | ±1.0 | – | % |
| | | $I_P = I_{PR(MAX)}$, $T_A$ = –40°C to 125°C | – | ±2.9 | – | % |
| Offset Voltage Error | $V_{QVO_E}$ | $I_P$ = 0 A, $T_A$ = 25°C | – | ±6 | – | mV |
| | | $I_P$ = 0 A, $T_A$ = –40°C to 125°C | – | ±19 | – | mV |
| **LIFETIME DRIFT** | | | | | | |
| Sensitivity Error Including Lifetime Drift | $E_{SENS_LT}$ | $I_P = I_{PR(MAX)}$, $T_A$ = –40°C to 125°C | – | ±3.7 | – | % |
| Offset Voltage Error Including Lifetime Drift | $V_{QVO_LT}$ | $I_P$ = 0 A, $T_A$ = –40°C to 125°C | – | ±22 | – | mV |

[1] Typical values are the mean ±3 sigma of production distributions.
[2] Lifetime drift characteristics are based on a statistical combination of production distributions and worst-case distribution drift observed during AEC-Q100 qualification.
[3] Validated by design and characterization.



Allegro MicroSystems
955 Perimeter Road
Manchester, NH 03103-3353 U.S.A.
www.allegromicro.com

Downloaded from Arrow.com.

**CT415-xSN840MR: ±40 A – PERFORMANCE CHARACTERISTICS:** Valid for $V_{DD}$ = 4.75 to 5.5 V, $C_{BYP}$ = 1.0 µF, and $T_A$ = –40°C to 125°C, unless otherwise specified

| Characteristics | Symbol | Test Conditions | Min. | Typ.[1] | Max. | Unit |
|---|---|---|---|---|---|---|
| Current Range | $I_{PR}$ | Limited by $T_{J(MAX)}$ = 150°C | –40 | – | 40 | A |
| Quiescent Voltage Output | $V_{QVO}$ | $T_A$ = 25°C, $I_P$ = 0 A | – | 2.5 | – | V |
| Sensitivity | Sens | $I_{PR(MIN)} < I_P < I_{PR(MAX)}$ | – | 50.0 | – | mV/A |
| Noise [3] | N | $T_A$ = 25°C, BW = 100 kHz, $I_P$ = 0 A | – | 11.8 | – | $mA_{RMS}$ |
| **VOUT ACCURACY PERFORMANCE** | | | | | | |
| Linearity Error | $E_{LIN}$ | $I_P = I_{PR(MAX)}$, $T_A$ = –40°C to 125°C | – | ±0.3 | – | % FS |
| Sensitivity Error | $E_{SENS}$ | $I_P = I_{PR(MAX)}$, $T_A$ = 25°C | – | ±1.0 | – | % |
| | | $I_P = I_{PR(MAX)}$, $T_A$ = –40°C to 125°C | – | ±2.9 | – | % |
| Offset Voltage Error | $V_{QVO_E}$ | $I_P$ = 0 A, $T_A$ = 25°C | – | ±6 | – | mV |
| | | $I_P$ = 0 A, $T_A$ = –40°C to 125°C | – | ±23 | – | mV |
| **LIFETIME DRIFT** | | | | | | |
| Sensitivity Error Including Lifetime Drift | $E_{SENS_LT}$ | $I_P = I_{PR(MAX)}$, $T_A$ = –40°C to 125°C | – | ±3.3 | – | % |
| Offset Voltage Error Including Lifetime Drift | $V_{QVO_LT}$ | $I_P$ = 0 A, $T_A$ = –40°C to 125°C | – | ±32 | – | mV |

[1] Typical values are the mean ±3 sigma of production distributions.
[2] Lifetime drift characteristics are based on a statistical combination of production distributions and worst-case distribution drift observed during AEC-Q100 qualification.
[3] Validated by design and characterization.



Allegro MicroSystems
955 Perimeter Road
Manchester, NH 03103-3353 U.S.A.
www.allegromicro.com

Downloaded from Arrow.com.

**CT415-xSN850MR: ±50 A – PERFORMANCE CHARACTERISTICS:** Valid for $V_{DD}$ = 4.75 to 5.5 V, $C_{BYP}$ = 1.0 µF, and $T_A$ = –40°C to 125°C, unless otherwise specified

| Characteristics | Symbol | Test Conditions | Min. | Typ.[1] | Max. | Unit |
|---|---|---|---|---|---|---|
| Current Range | $I_{PR}$ | Limited by $T_{J(MAX)}$ = 150°C | –50 | – | 50 | A |
| Quiescent Voltage Output | $V_{QVO}$ | $T_A$ = 25°C, $I_P$ = 0 A | – | 2.5 | – | V |
| Sensitivity | Sens | $I_{PR(MIN)} < I_P < I_{PR(MAX)}$ | – | 40.0 | – | mV/A |
| Noise [3] | N | $T_A$ = 25°C, BW = 100 kHz, $I_P$ = 0 A | – | 12.7 | – | $mA_{RMS}$ |
| **VOUT ACCURACY PERFORMANCE** | | | | | | |
| Linearity Error | $E_{LIN}$ | $I_P = I_{PR(MAX)}$, $T_A$ = –40°C to 125°C | – | ±0.3 | – | % FS |
| Sensitivity Error | $E_{SENS}$ | $I_P = I_{PR(MAX)}$, $T_A$ = 25°C | – | ±1.0 | – | % |
| | | $I_P = I_{PR(MAX)}$, $T_A$ = –40°C to 125°C | – | ±2.9 | – | % |
| Offset Voltage Error | $V_{QVO_E}$ | $I_P$ = 0 A, $T_A$ = 25°C | – | ±6 | – | mV |
| | | $I_P$ = 0 A, $T_A$ = –40°C to 125°C | – | ±20 | – | mV |
| **LIFETIME DRIFT** | | | | | | |
| Sensitivity Error Including Lifetime Drift | $E_{SENS_LT}$ | $I_P = I_{PR(MAX)}$, $T_A$ = –40°C to 125°C | – | ±3.3 | – | % |
| Offset Voltage Error Including Lifetime Drift | $V_{QVO_LT}$ | $I_P$ = 0 A, $T_A$ = –40°C to 125°C | – | ±29 | – | mV |

[1] Typical values are the mean ±3 sigma of production distributions.
[2] Lifetime drift characteristics are based on a statistical combination of production distributions and worst-case distribution drift observed during AEC-Q100 qualification.
[3] Validated by design and characterization.



Allegro MicroSystems
955 Perimeter Road
Manchester, NH 03103-3353 U.S.A.
www.allegromicro.com

Downloaded from Arrow.com.

**CT416-xSN850MR: ±50 A – PERFORMANCE CHARACTERISTICS:** Valid for $V_{DD}$ = 3.0 to 3.6 V, $C_{BYP}$ = 1.0 µF, and $T_A$ = –40°C to 125°C, unless otherwise specified

| Characteristics | Symbol | Test Conditions | Min. | Typ.[1] | Max. | Unit |
|---|---|---|---|---|---|---|
| Current Range | $I_{PR}$ | Limited by $T_{J(MAX)}$ = 150°C | –50 | – | 50 | A |
| Quiescent Voltage Output | $V_{QVO}$ | $T_A$ = 25°C, $I_P$ = 0 A | – | 1.65 | – | V |
| Sensitivity | Sens | $I_{PR(MIN)} < I_P < I_{PR(MAX)}$ | – | 20.0 | – | mV/A |
| Noise [3] | N | $T_A$ = 25°C, BW = 100 kHz, $I_P$ = 0 A | – | 17.5 | – | $mA_{RMS}$ |
| **VOUT ACCURACY PERFORMANCE** | | | | | | |
| Linearity Error | $E_{LIN}$ | $I_P = I_{PR(MAX)}$, $T_A$ = –40°C to 125°C | – | ±0.3 | – | % FS |
| Sensitivity Error | $E_{SENS}$ | $I_P = I_{PR(MAX)}$, $T_A$ = 25°C | – | ±1.0 | – | % |
| | | $I_P = I_{PR(MAX)}$, $T_A$ = –40°C to 125°C | – | ±2.9 | – | % |
| Offset Voltage Error | $V_{QVO_E}$ | $I_P$ = 0 A, $T_A$ = 25°C | – | ±6 | – | mV |
| | | $I_P$ = 0 A, $T_A$ = –40°C to 125°C | – | ±17 | – | mV |
| **LIFETIME DRIFT** | | | | | | |
| Sensitivity Error Including Lifetime Drift | $E_{SENS_LT}$ | $I_P = I_{PR(MAX)}$, $T_A$ = –40°C to 125°C | – | ±3.7 | – | % |
| Offset Voltage Error Including Lifetime Drift | $V_{QVO_LT}$ | $I_P$ = 0 A, $T_A$ = –40°C to 125°C | – | ±20 | – | mV |

[1] Typical values are the mean ±3 sigma of production distributions.
[2] Lifetime drift characteristics are based on a statistical combination of production distributions and worst-case distribution drift observed during AEC-Q100 qualification.
[3] Validated by design and characterization.



Allegro MicroSystems
955 Perimeter Road
Manchester, NH 03103-3353 U.S.A.
www.allegromicro.com

Downloaded from Arrow.com.

**CT415-xSN865MR: ±65 A – PERFORMANCE CHARACTERISTICS:** Valid for $V_{DD}$ = 4.75 to 5.5 V, $C_{BYP}$ = 1.0 µF, and $T_A$ = –40°C to 125°C, unless otherwise specified

| Characteristics | Symbol | Test Conditions | Min. | Typ.[1] | Max. | Unit |
|---|---|---|---|---|---|---|
| Current Range | $I_{PR}$ | Limited by $T_{J(MAX)}$ = 150°C | –65 | – | 65 | A |
| Quiescent Voltage Output | $V_{QVO}$ | $T_A$ = 25°C, $I_P$ = 0 A | – | 2.5 | – | V |
| Sensitivity | Sens | $I_{PR(MIN)} < I_P < I_{PR(MAX)}$ | – | 30.8 | – | mV/A |
| Noise [3] | N | $T_A$ = 25°C, BW = 100 kHz, $I_P$ = 0 A | – | 14.2 | – | $mA_{RMS}$ |
| **VOUT ACCURACY PERFORMANCE** | | | | | | |
| Linearity Error | $E_{LIN}$ | $I_P = I_{PR(MAX)}$, $T_A$ = –40°C to 125°C | – | ±0.3 | – | % FS |
| Sensitivity Error | $E_{SENS}$ | $I_P = I_{PR(MAX)}$, $T_A$ = 25°C | – | ±1.0 | – | % |
| | | $I_P = I_{PR(MAX)}$, $T_A$ = –40°C to 125°C | – | ±2.9 | – | % |
| Offset Voltage Error | $V_{QVO_E}$ | $I_P$ = 0 A, $T_A$ = 25°C | – | ±6 | – | mV |
| | | $I_P$ = 0 A, $T_A$ = –40°C to 125°C | – | ±18 | – | mV |
| **LIFETIME DRIFT** | | | | | | |
| Sensitivity Error Including Lifetime Drift | $E_{SENS_LT}$ | $I_P = I_{PR(MAX)}$, $T_A$ = –40°C to 125°C | – | ±3.3 | – | % |
| Offset Voltage Error Including Lifetime Drift | $V_{QVO_LT}$ | $I_P$ = 0 A, $T_A$ = –40°C to 125°C | – | ±27 | – | mV |

[1] Typical values are the mean ±3 sigma of production distributions.
[2] Lifetime drift characteristics are based on a statistical combination of production distributions and worst-case distribution drift observed during AEC-Q100 qualification.
[3] Validated by design and characterization.



Allegro MicroSystems
955 Perimeter Road
Manchester, NH 03103-3353 U.S.A.
www.allegromicro.com

Downloaded from Arrow.com.

**CT416-xSN865MR: ±65 A – PERFORMANCE CHARACTERISTICS:** Valid for $V_{DD}$ = 3.0 to 3.6 V, $C_{BYP}$ = 1.0 µF, and $T_A$ = –40°C to 125°C, unless otherwise specified

| Characteristics | Symbol | Test Conditions | Min. | Typ.[1] | Max. | Unit |
|---|---|---|---|---|---|---|
| Current Range | $I_{PR}$ | Limited by $T_{J(MAX)}$ = 150°C | –65 | – | 65 | A |
| Quiescent Voltage Output | $V_{QVO}$ | $T_A$ = 25°C, $I_P$ = 0 A | – | 1.65 | – | V |
| Sensitivity | Sens | $I_{PR(MIN)} < I_P < I_{PR(MAX)}$ | – | 15.4 | – | mV/A |
| Noise [3] | N | $T_A$ = 25°C, BW = 100 kHz, $I_P$ = 0 A | – | 20.3 | – | $mA_{RMS}$ |
| **VOUT ACCURACY PERFORMANCE** | | | | | | |
| Linearity Error | $E_{LIN}$ | $I_P = I_{PR(MAX)}$, $T_A$ = –40°C to 125°C | – | ±0.3 | – | % FS |
| Sensitivity Error | $E_{SENS}$ | $I_P = I_{PR(MAX)}$, $T_A$ = 25°C | – | ±1.0 | – | % |
| | | $I_P = I_{PR(MAX)}$, $T_A$ = –40°C to 125°C | – | ±2.9 | – | % |
| Offset Voltage Error | $V_{QVO_E}$ | $I_P$ = 0 A, $T_A$ = 25°C | – | ±6 | – | mV |
| | | $I_P$ = 0 A, $T_A$ = –40°C to 125°C | – | ±17 | – | mV |
| **LIFETIME DRIFT** | | | | | | |
| Sensitivity Error Including Lifetime Drift | $E_{SENS_LT}$ | $I_P = I_{PR(MAX)}$, $T_A$ = –40°C to 125°C | – | ±3.7 | – | % |
| Offset Voltage Error Including Lifetime Drift | $V_{QVO_LT}$ | $I_P$ = 0 A, $T_A$ = –40°C to 125°C | – | ±20 | – | mV |

[1] Typical values are the mean ±3 sigma of production distributions.
[2] Lifetime drift characteristics are based on a statistical combination of production distributions and worst-case distribution drift observed during AEC-Q100 qualification.
[3] Validated by design and characterization.



Allegro MicroSystems
955 Perimeter Road
Manchester, NH 03103-3353 U.S.A.
www.allegromicro.com

Downloaded from Arrow.com.

**CT415-xSN820DR: 0 to 20 A – PERFORMANCE CHARACTERISTICS:** Valid for $V_{DD}$ = 4.75 to 5.5 V, $C_{BYP}$ = 1.0 µF, and $T_A$ = –40°C to 125°C, unless otherwise specified

| Characteristics | Symbol | Test Conditions | Min. | Typ.[1] | Max. | Unit |
|---|---|---|---|---|---|---|
| Current Range | $I_{PR}$ | Limited by $T_{J(MAX)}$ = 150°C | 0 | – | 20 | A |
| Quiescent Voltage Output | $V_{QVO}$ | $T_A$ = 25°C, $I_P$ = 0 A | – | 0.5 | – | V |
| Sensitivity | Sens | $I_{PR(MIN)} < I_P < I_{PR(MAX)}$ | – | 200.0 | – | mV/A |
| Noise [3] | N | $T_A$ = 25°C, BW = 100 kHz, $I_P$ = 0 A | – | 8.9 | – | $mA_{RMS}$ |
| **VOUT ACCURACY PERFORMANCE** | | | | | | |
| Linearity Error | $E_{LIN}$ | $I_P = I_{PR(MAX)}$, $T_A$ = –40°C to 125°C | – | ±0.3 | – | % FS |
| Sensitivity Error | $E_{SENS}$ | $I_P = I_{PR(MAX)}$, $T_A$ = 25°C | – | ±1.0 | – | % |
| | | $I_P = I_{PR(MAX)}$, $T_A$ = –40°C to 125°C | – | ±2.9 | – | % |
| Offset Voltage Error | $V_{QVO_E}$ | $I_P$ = 0 A, $T_A$ = 25°C | – | ±12 | – | mV |
| | | $I_P$ = 0 A, $T_A$ = –40°C to 125°C | – | ±73 | – | mV |
| **LIFETIME DRIFT** | | | | | | |
| Sensitivity Error Including Lifetime Drift | $E_{SENS_LT}$ | $I_P = I_{PR(MAX)}$, $T_A$ = –40°C to 125°C | – | ±3.3 | – | % |
| Offset Voltage Error Including Lifetime Drift | $V_{QVO_LT}$ | $I_P$ = 0 A, $T_A$ = –40°C to 125°C | – | ±79 | – | mV |

[1] Typical values are the mean ±3 sigma of production distributions.
[2] Lifetime drift characteristics are based on a statistical combination of production distributions and worst-case distribution drift observed during AEC-Q100 qualification.
[3] Validated by design and characterization.



Allegro MicroSystems
955 Perimeter Road
Manchester, NH 03103-3353 U.S.A.
www.allegromicro.com

Downloaded from Arrow.com.

**CT416-xSN820DR: 0 to 20 A – PERFORMANCE CHARACTERISTICS:** Valid for $V_{DD}$ = 3.0 to 3.6 V, $C_{BYP}$ = 1.0 µF, and $T_A$ = –40°C to 125°C, unless otherwise specified

| Characteristics | Symbol | Test Conditions | Min. | Typ.[1] | Max. | Unit |
|---|---|---|---|---|---|---|
| Current Range | $I_{PR}$ | Limited by $T_{J(MAX)}$ = 150°C | 0 | – | 20 | A |
| Quiescent Voltage Output | $V_{QVO}$ | $T_A$ = 25°C, $I_P$ = 0 A | – | 0.65 | – | V |
| Sensitivity | Sens | $I_{PR(MIN)} < I_P < I_{PR(MAX)}$ | – | 100.0 | – | mV/A |
| Noise [3] | N | $T_A$ = 25°C, BW = 100 kHz, $I_P$ = 0 A | – | 9.9 | – | $mA_{RMS}$ |
| **VOUT ACCURACY PERFORMANCE** | | | | | | |
| Linearity Error | $E_{LIN}$ | $I_P = I_{PR(MAX)}$, $T_A$ = –40°C to 125°C | – | ±0.3 | – | % FS |
| Sensitivity Error | $E_{SENS}$ | $I_P = I_{PR(MAX)}$, $T_A$ = 25°C | – | ±1.0 | – | % |
| | | $I_P = I_{PR(MAX)}$, $T_A$ = –40°C to 125°C | – | ±2.9 | – | % |
| Offset Voltage Error | $V_{QVO_E}$ | $I_P$ = 0 A, $T_A$ = 25°C | – | ±6 | – | mV |
| | | $I_P$ = 0 A, $T_A$ = –40°C to 125°C | – | ±39 | – | mV |
| **LIFETIME DRIFT** | | | | | | |
| Sensitivity Error Including Lifetime Drift | $E_{SENS_LT}$ | $I_P = I_{PR(MAX)}$, $T_A$ = –40°C to 125°C | – | ±3.7 | – | % |
| Offset Voltage Error Including Lifetime Drift | $V_{QVO_LT}$ | $I_P$ = 0 A, $T_A$ = –40°C to 125°C | – | ±44 | – | mV |

[1] Typical values are the mean ±3 sigma of production distributions.
[2] Lifetime drift characteristics are based on a statistical combination of production distributions and worst-case distribution drift observed during AEC-Q100 qualification.
[3] Validated by design and characterization.



Allegro MicroSystems
955 Perimeter Road
Manchester, NH 03103-3353 U.S.A.
www.allegromicro.com

Downloaded from Arrow.com.

**CT415-xSN830DR: 0 to 30 A – PERFORMANCE CHARACTERISTICS:** Valid for $V_{DD}$ = 4.75 to 5.5 V, $C_{BYP}$ = 1.0 µF, and $T_A$ = –40°C to 125°C, unless otherwise specified

| Characteristics | Symbol | Test Conditions | Min. | Typ.[1] | Max. | Unit |
|---|---|---|---|---|---|---|
| Current Range | $I_{PR}$ | Limited by $T_{J(MAX)}$ = 150°C | 0 | – | 30 | A |
| Quiescent Voltage Output | $V_{QVO}$ | $T_A$ = 25°C, $I_P$ = 0 A | – | 0.5 | – | V |
| Sensitivity | Sens | $I_{PR(MIN)} < I_P < I_{PR(MAX)}$ | – | 133.3 | – | mV/A |
| Noise [3] | N | $T_A$ = 25°C, BW = 100 kHz, $I_P$ = 0 A | – | 9.4 | – | $mA_{RMS}$ |
| **VOUT ACCURACY PERFORMANCE** | | | | | | |
| Linearity Error | $E_{LIN}$ | $I_P = I_{PR(MAX)}$, $T_A$ = –40°C to 125°C | – | ±0.3 | – | % FS |
| Sensitivity Error | $E_{SENS}$ | $I_P = I_{PR(MAX)}$, $T_A$ = 25°C | – | ±1.0 | – | % |
| | | $I_P = I_{PR(MAX)}$, $T_A$ = –40°C to 125°C | – | ±2.9 | – | % |
| Offset Voltage Error | $V_{QVO_E}$ | $I_P$ = 0 A, $T_A$ = 25°C | – | ±8 | – | mV |
| | | $I_P$ = 0 A, $T_A$ = –40°C to 125°C | – | ±50 | – | mV |
| **LIFETIME DRIFT** | | | | | | |
| Sensitivity Error Including Lifetime Drift | $E_{SENS_LT}$ | $I_P = I_{PR(MAX)}$, $T_A$ = –40°C to 125°C | – | ±3.3 | – | % |
| Offset Voltage Error Including Lifetime Drift | $V_{QVO_LT}$ | $I_P$ = 0 A, $T_A$ = –40°C to 125°C | – | ±58 | – | mV |

[1] Typical values are the mean ±3 sigma of production distributions.
[2] Lifetime drift characteristics are based on a statistical combination of production distributions and worst-case distribution drift observed during AEC-Q100 qualification.
[3] Validated by design and characterization.



Allegro MicroSystems
955 Perimeter Road
Manchester, NH 03103-3353 U.S.A.
www.allegromicro.com

Downloaded from Arrow.com.

**CT416-xSN830DR: 0 to 30 A – PERFORMANCE CHARACTERISTICS:** Valid for $V_{DD}$ = 3.0 to 3.6 V, $C_{BYP}$ = 1.0 µF, and $T_A$ = –40°C to 125°C, unless otherwise specified

| Characteristics | Symbol | Test Conditions | Min. | Typ.[1] | Max. | Unit |
|---|---|---|---|---|---|---|
| Current Range | $I_{PR}$ | Limited by $T_{J(MAX)}$ = 150°C | 0 | – | 30 | A |
| Quiescent Voltage Output | $V_{QVO}$ | $T_A$ = 25°C, $I_P$ = 0 A | – | 0.65 | – | V |
| Sensitivity | Sens | $I_{PR(MIN)} < I_P < I_{PR(MAX)}$ | – | 66.7 | – | mV/A |
| Noise [3] | N | $T_A$ = 25°C, BW = 100 kHz, $I_P$ = 0 A | – | 10.8 | – | $mA_{RMS}$ |
| **VOUT ACCURACY PERFORMANCE** | | | | | | |
| Linearity Error | $E_{LIN}$ | $I_P = I_{PR(MAX)}$, $T_A$ = –40°C to 125°C | – | ±0.3 | – | % FS |
| Sensitivity Error | $E_{SENS}$ | $I_P = I_{PR(MAX)}$, $T_A$ = 25°C | – | ±1.0 | – | % |
| | | $I_P = I_{PR(MAX)}$, $T_A$ = –40°C to 125°C | – | ±2.9 | – | % |
| Offset Voltage Error | $V_{QVO_E}$ | $I_P$ = 0 A, $T_A$ = 25°C | – | ±6 | – | mV |
| | | $I_P$ = 0 A, $T_A$ = –40°C to 125°C | – | ±28 | – | mV |
| **LIFETIME DRIFT** | | | | | | |
| Sensitivity Error Including Lifetime Drift | $E_{SENS_LT}$ | $I_P = I_{PR(MAX)}$, $T_A$ = –40°C to 125°C | – | ±3.7 | – | % |
| Offset Voltage Error Including Lifetime Drift | $V_{QVO_LT}$ | $I_P$ = 0 A, $T_A$ = –40°C to 125°C | – | ±33 | – | mV |

[1] Typical values are the mean ±3 sigma of production distributions.
[2] Lifetime drift characteristics are based on a statistical combination of production distributions and worst-case distribution drift observed during AEC-Q100 qualification.
[3] Validated by design and characterization.



Allegro MicroSystems
955 Perimeter Road
Manchester, NH 03103-3353 U.S.A.
www.allegromicro.com

Downloaded from Arrow.com.

**CT415-xSN850DR: 0 to 50 A – PERFORMANCE CHARACTERISTICS:** Valid for $V_{DD}$ = 4.75 to 5.5 V, $C_{BYP}$ = 1.0 µF, and $T_A$ = –40°C to 125°C, unless otherwise specified

| Characteristics | Symbol | Test Conditions | Min. | Typ.[1] | Max. | Unit |
|---|---|---|---|---|---|---|
| Current Range | $I_{PR}$ | Limited by $T_{J(MAX)}$ = 150°C | 0 | – | 50 | A |
| Quiescent Voltage Output | $V_{QVO}$ | $T_A$ = 25°C, $I_P$ = 0 A | – | 0.5 | – | V |
| Sensitivity | Sens | $I_{PR(MIN)} < I_P < I_{PR(MAX)}$ | – | 80.0 | – | mV/A |
| Noise [3] | N | $T_A$ = 25°C, BW = 100 kHz, $I_P$ = 0 A | – | 10.4 | – | $mA_{RMS}$ |
| **VOUT ACCURACY PERFORMANCE** | | | | | | |
| Linearity Error | $E_{LIN}$ | $I_P = I_{PR(MAX)}$, $T_A$ = –40°C to 125°C | – | ±0.3 | – | % FS |
| Sensitivity Error | $E_{SENS}$ | $I_P = I_{PR(MAX)}$, $T_A$ = 25°C | – | ±1.0 | – | % |
| | | $I_P = I_{PR(MAX)}$, $T_A$ = –40°C to 125°C | – | ±2.9 | – | % |
| Offset Voltage Error | $V_{QVO_E}$ | $I_P$ = 0 A, $T_A$ = 25°C | – | ±6 | – | mV |
| | | $I_P$ = 0 A, $T_A$ = –40°C to 125°C | – | ±32 | – | mV |
| **LIFETIME DRIFT** | | | | | | |
| Sensitivity Error Including Lifetime Drift | $E_{SENS_LT}$ | $I_P = I_{PR(MAX)}$, $T_A$ = –40°C to 125°C | – | ±3.3 | – | % |
| Offset Voltage Error Including Lifetime Drift | $V_{QVO_LT}$ | $I_P$ = 0 A, $T_A$ = –40°C to 125°C | – | ±41 | – | mV |

[1] Typical values are the mean ±3 sigma of production distributions.
[2] Lifetime drift characteristics are based on a statistical combination of production distributions and worst-case distribution drift observed during AEC-Q100 qualification.
[3] Validated by design and characterization.



Allegro MicroSystems
955 Perimeter Road
Manchester, NH 03103-3353 U.S.A.
www.allegromicro.com

Downloaded from Arrow.com.

**CT416-xSN850DR: 0 to 50 A – PERFORMANCE CHARACTERISTICS:** Valid for $V_{DD}$ = 3.0 to 3.6 V, $C_{BYP}$ = 1.0 µF, and $T_A$ = –40°C to 125°C, unless otherwise specified

| Characteristics | Symbol | Test Conditions | Min. | Typ.[1] | Max. | Unit |
|---|---|---|---|---|---|---|
| Current Range | $I_{PR}$ | Limited by $T_{J(MAX)}$ = 150°C | 0 | – | 50 | A |
| Quiescent Voltage Output | $V_{QVO}$ | $T_A$ = 25°C, $I_P$ = 0 A | – | 0.65 | – | V |
| Sensitivity | Sens | $I_{PR(MIN)} < I_P < I_{PR(MAX)}$ | – | 40.0 | – | mV/A |
| Noise [3] | N | $T_A$ = 25°C, BW = 100 kHz, $I_P$ = 0 A | – | 12.7 | – | $mA_{RMS}$ |
| **VOUT ACCURACY PERFORMANCE** | | | | | | |
| Linearity Error | $E_{LIN}$ | $I_P = I_{PR(MAX)}$, $T_A$ = –40°C to 125°C | – | ±0.3 | – | % FS |
| Sensitivity Error | $E_{SENS}$ | $I_P = I_{PR(MAX)}$, $T_A$ = 25°C | – | ±1.0 | – | % |
| | | $I_P = I_{PR(MAX)}$, $T_A$ = –40°C to 125°C | – | ±2.9 | – | % |
| Offset Voltage Error | $V_{QVO_E}$ | $I_P$ = 0 A, $T_A$ = 25°C | – | ±6 | – | mV |
| | | $I_P$ = 0 A, $T_A$ = –40°C to 125°C | – | ±20 | – | mV |
| **LIFETIME DRIFT** | | | | | | |
| Sensitivity Error Including Lifetime Drift | $E_{SENS_LT}$ | $I_P = I_{PR(MAX)}$, $T_A$ = –40°C to 125°C | – | ±3.7 | – | % |
| Offset Voltage Error Including Lifetime Drift | $V_{QVO_LT}$ | $I_P$ = 0 A, $T_A$ = –40°C to 125°C | – | ±24 | – | mV |

[1] Typical values are the mean ±3 sigma of production distributions.
[2] Lifetime drift characteristics are based on a statistical combination of production distributions and worst-case distribution drift observed during AEC-Q100 qualification.
[3] Validated by design and characterization.



Allegro MicroSystems
955 Perimeter Road
Manchester, NH 03103-3353 U.S.A.
www.allegromicro.com

Downloaded from Arrow.com.

**CT415-xSN865DR: 0 to 65 A – PERFORMANCE CHARACTERISTICS:** Valid for $V_{DD}$ = 4.75 to 5.5 V, $C_{BYP}$ = 1.0 µF, and $T_A$ = –40°C to 125°C, unless otherwise specified

| Characteristics | Symbol | Test Conditions | Min. | Typ.[1] | Max. | Unit |
|---|---|---|---|---|---|---|
| Current Range | $I_{PR}$ | Limited by $T_{J(MAX)}$ = 150°C | 0 | – | 65 | A |
| Quiescent Voltage Output | $V_{QVO}$ | $T_A$ = 25°C, $I_P$ = 0 A | – | 0.5 | – | V |
| Sensitivity | Sens | $I_{PR(MIN)} < I_P < I_{PR(MAX)}$ | – | 61.5 | – | mV/A |
| Noise [3] | N | $T_A$ = 25°C, BW = 100 kHz, $I_P$ = 0 A | – | 11.1 | – | $mA_{RMS}$ |
| **VOUT ACCURACY PERFORMANCE** | | | | | | |
| Linearity Error | $E_{LIN}$ | $I_P = I_{PR(MAX)}$, $T_A$ = –40°C to 125°C | – | ±0.3 | – | % FS |
| Sensitivity Error | $E_{SENS}$ | $I_P = I_{PR(MAX)}$, $T_A$ = 25°C | – | ±1.0 | – | % |
| | | $I_P = I_{PR(MAX)}$, $T_A$ = –40°C to 125°C | – | ±2.9 | – | % |
| Offset Voltage Error | $V_{QVO_E}$ | $I_P$ = 0 A, $T_A$ = 25°C | – | ±6 | – | mV |
| | | $I_P$ = 0 A, $T_A$ = –40°C to 125°C | – | ±26 | – | mV |
| **LIFETIME DRIFT** | | | | | | |
| Sensitivity Error Including Lifetime Drift | $E_{SENS_LT}$ | $I_P = I_{PR(MAX)}$, $T_A$ = –40°C to 125°C | – | ±3.3 | – | % |
| Offset Voltage Error Including Lifetime Drift | $V_{QVO_LT}$ | $I_P$ = 0 A, $T_A$ = –40°C to 125°C | – | ±35 | – | mV |

[1] Typical values are the mean ±3 sigma of production distributions.
[2] Lifetime drift characteristics are based on a statistical combination of production distributions and worst-case distribution drift observed during AEC-Q100 qualification.
[3] Validated by design and characterization.



Allegro MicroSystems
955 Perimeter Road
Manchester, NH 03103-3353 U.S.A.
www.allegromicro.com

Downloaded from Arrow.com.

**CT416-xSN865DR: 0 to 65 A – PERFORMANCE CHARACTERISTICS:** Valid for $V_{DD}$ = 3.0 to 3.6 V, $C_{BYP}$ = 1.0 µF, and $T_A$ = –40°C to 125°C, unless otherwise specified

| Characteristics | Symbol | Test Conditions | Min. | Typ.[1] | Max. | Unit |
|---|---|---|---|---|---|---|
| Current Range | $I_{PR}$ | Limited by $T_{J(MAX)}$ = 150°C | 0 | – | 65 | A |
| Quiescent Voltage Output | $V_{QVO}$ | $T_A$ = 25°C, $I_P$ = 0 A | – | 0.65 | – | V |
| Sensitivity | Sens | $I_{PR(MIN)} < I_P < I_{PR(MAX)}$ | – | 30.8 | – | mV/A |
| Noise [3] | N | $T_A$ = 25°C, BW = 100 kHz, $I_P$ = 0 A | – | 14.2 | – | $mA_{RMS}$ |
| **VOUT ACCURACY PERFORMANCE** | | | | | | |
| Linearity Error | $E_{LIN}$ | $I_P = I_{PR(MAX)}$, $T_A$ = –40°C to 125°C | – | ±0.3 | – | % FS |
| Sensitivity Error | $E_{SENS}$ | $I_P = I_{PR(MAX)}$, $T_A$ = 25°C | – | ±1.0 | – | % |
| | | $I_P = I_{PR(MAX)}$, $T_A$ = –40°C to 125°C | – | ±2.9 | – | % |
| Offset Voltage Error | $V_{QVO_E}$ | $I_P$ = 0 A, $T_A$ = 25°C | – | ±6 | – | mV |
| | | $I_P$ = 0 A, $T_A$ = –40°C to 125°C | – | ±18 | – | mV |
| **LIFETIME DRIFT** | | | | | | |
| Sensitivity Error Including Lifetime Drift | $E_{SENS_LT}$ | $I_P = I_{PR(MAX)}$, $T_A$ = –40°C to 125°C | – | ±3.7 | – | % |
| Offset Voltage Error Including Lifetime Drift | $V_{QVO_LT}$ | $I_P$ = 0 A, $T_A$ = –40°C to 125°C | – | ±22 | – | mV |

[1] Typical values are the mean ±3 sigma of production distributions.
[2] Lifetime drift characteristics are based on a statistical combination of production distributions and worst-case distribution drift observed during AEC-Q100 qualification.
[3] Validated by design and characterization.



Allegro MicroSystems
955 Perimeter Road
Manchester, NH 03103-3353 U.S.A.
www.allegromicro.com

Downloaded from Arrow.com.

## CHARACTERISTIC PERFORMANCE

$V_{DD} = V_{DD(TYP)}$, $T_A = 25°C$, and $C_{BYP} = 1\ \mu F$ (unless otherwise specified)

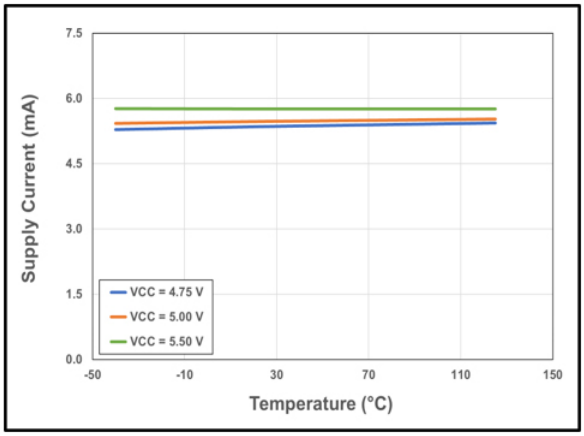


**Figure 4: Supply Current vs. Temperature vs. Supply Voltage**

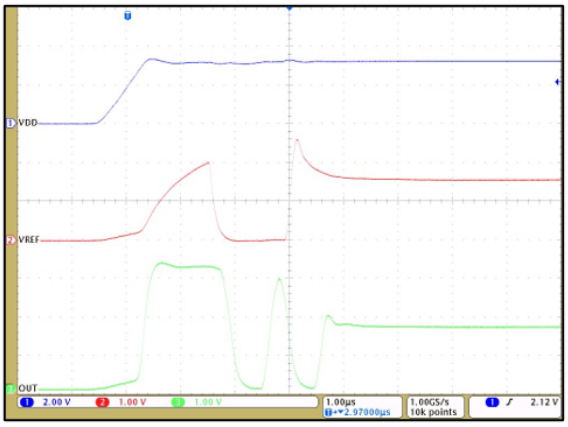


**Figure 5: Startup Waveforms**



Allegro MicroSystems
955 Perimeter Road
Manchester, NH 03103-3353 U.S.A.
www.allegromicro.com

Downloaded from Arrow.com.

## COMMON CHARACTERISTIC PERFORMANCE

$V_{DD} = V_{DD(TYP)}$, $T_A = 25°C$, and $C_{BYP} = 1\ \mu F$ (unless otherwise specified)

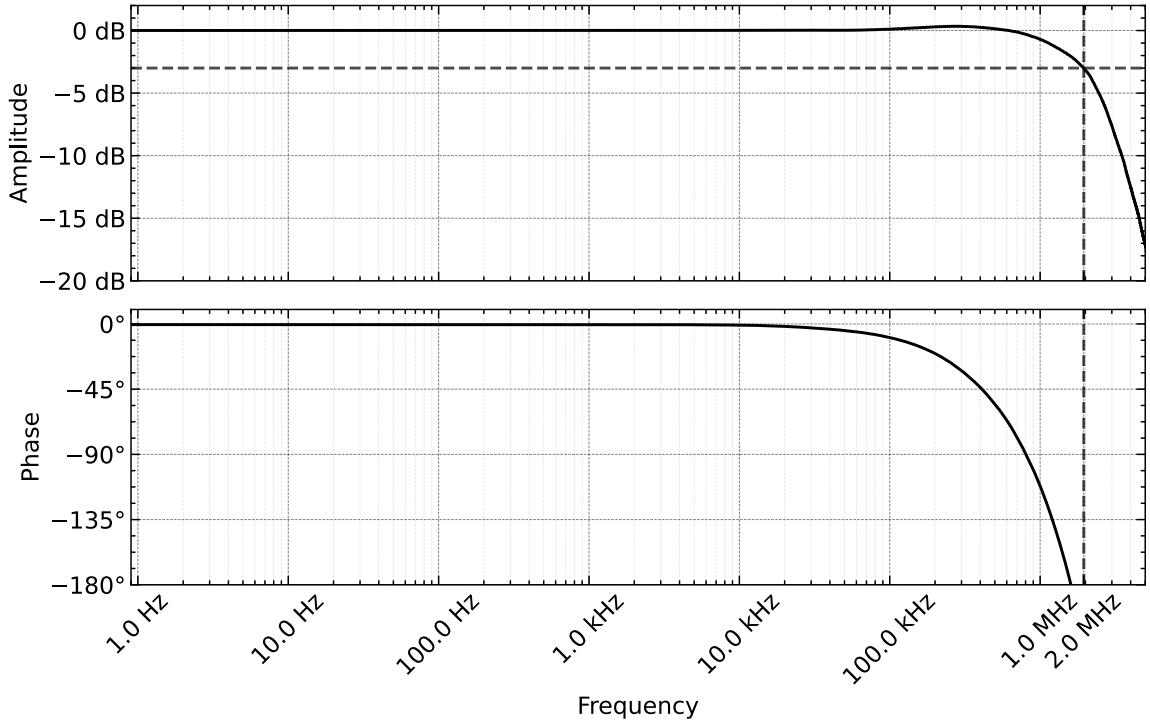


**Figure 6: Frequency Response**

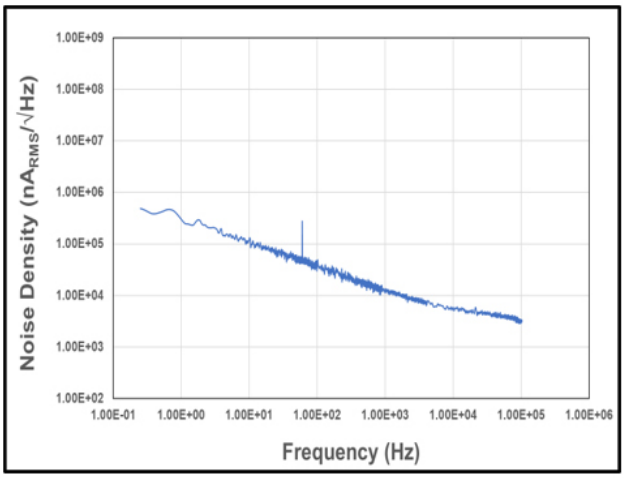


**Figure 7: Noise Density vs. Frequency**



Allegro MicroSystems
955 Perimeter Road
Manchester, NH 03103-3353 U.S.A.
www.allegromicro.com

Downloaded from Arrow.com.

## RESPONSE CHARACTERISTICS DEFINITIONS AND PERFORMANCE DATA

### Response Time ($t_{RESP}$)

The time interval between a) when the sensed input current reaches 90% of its full-scale value, and b) when the sensor output, $V_{OUT}$, reaches 90% of its full-scale output value.

### Propagation Delay ($t_{PD}$)

The time interval between a) when the sensed input current reaches 20% of its full-scale value, and b) when the sensor output, $V_{OUT}$, reaches 20% of its full-scale output value.

### Rise Time ($t_R$)

The time interval between a) when the sensor output, $V_{OUT}$, reaches 10% of its full-scale value, and b) when the sensor output, $V_{OUT}$, reaches 90% of its full-scale value.

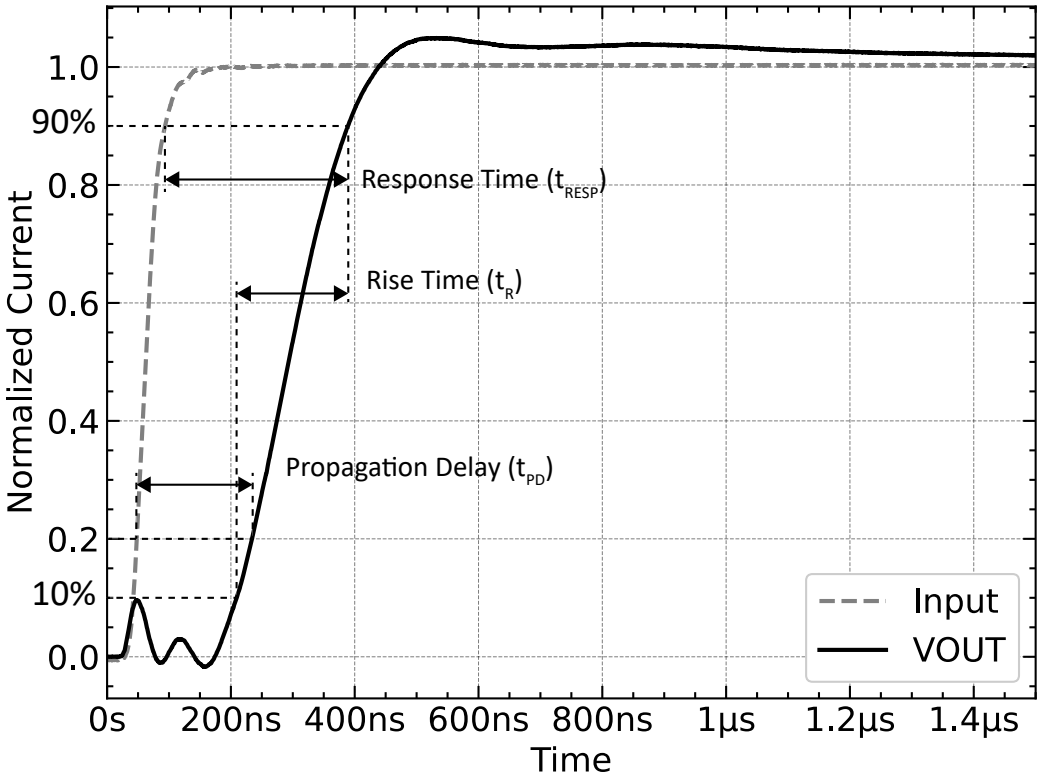


**Figure 8: CT416 and CT415 Step Response Characteristics**



Allegro MicroSystems
955 Perimeter Road
Manchester, NH 03103-3353 U.S.A.
www.allegromicro.com

Downloaded from Arrow.com.

## DEFINITIONS OF OPERATING AND PERFORMANCE CHARACTERISTICS

### Overview

The CT415 and CT416 are high-accuracy contact current sensors with an integrated current-carrying conductor that handles up to 65 A. It has high sensitivity and a wide dynamic range with excellent accuracy across temperature.

When current flows through the current-carrying conductor, the XtremeSense TMR sensors inside the chip sense the field that, in turn, generates differential voltage signals that pass through the analog front end (AFE) to output a current measurement.

The chip is designed to enable a fast response time of 300 ns for the current measurement from the VOUT pin, as the bandwidth for the CT416 and CT415 is 1 MHz. Even with a high bandwidth, the chip consumes a minimal amount of power.

### Quiescent Voltage Output ($V_{QVO}$)

Quiescent voltage output, $V_{QVO}$, is defined as the voltage on the output, $V_{OUT}$, when current is not applied, $I_P = 0$.

$$V_{QVO} = V_{OUT_@0A}\ [mV]$$

### Quiescent Voltage Output Error ($V_{QVO_E}$)

Quiescent voltage output error, $V_{QVO_E}$, is defined as the deviation of $V_{QVO}$ from the nominal target value in production testing.

$$V_{QVO_E} = V_{QVO_MEASURED} - V_{QVO_IDEAL}\ [mV]$$

### Sensitivity (Sens)

Sensitivity, or Sens, is defined as the ratio of the $V_{OUT}$ swing and the current through the primary conductor, $I_P$. The current causes a voltage change on $V_{OUT}$ away from $V_{QVO}$ until $V_{SAT}$. The magnitude and direction of the output voltage is proportional to the magnitude and direction of the current, $I_P$. The proportional relationship between output voltage and current is sensitivity, defined as:

$$Sens = \frac{V_{OUT_IP1} - V_{OUT_IP2}}{I_{P1} - I_{P2}}\ [mV/A]$$

where $I_{P1}$ and $I_{P2}$ are two different currents, and $V_{OUT}(I_{P1})$ and $V_{OUT}(I_{P2})$ are the respective output voltages at VOUT at those currents.

### Sensitivity Error ($E_{SENS}$)

Sensitivity error, $E_{SENS}$, is the deviation of sensitivity from the nominal sensitivity target value in production testing.

$$E_{SENS} = \frac{SENS_{MEASURED} - SENS_{IDEAL}}{SENS_{IDEAL}} \times 100\ [\%]$$

### Error Including Lifetime Drift ($E_{SENS_LT}$ and $V_{QVO_LT}$)

Lifetime drift characteristics are based on the mean drift of the worst-case distribution observed during AEC-Q100 qualification stresses.

### Sensitivity Power Supply Rejection Ratio ($PSRR_S$)

The Sensitivity Power Supply Rejection Ratio or $PSRR_S$ is defined as 20 × log of the ratio of the % change the sensitivity over the % change in $V_{DD}$ (±100 mV variable AC $V_{DD}$ centered at 5 V) reported as dB in a specified frequency range. The equation is shown below:

$$\mathrm{PSRR_S} = 20 \times \log\left(\frac{\Delta\%\mathrm{Sens}}{\Delta \mathrm{V_{DD}}}\right)$$

### Offset Power Supply Rejection Ratio ($PSRR_O$)

The Offset Power Supply Rejection Ratio or $PSRR_O$ is defined as 20 × log of the ratio of the change of QVO in volts over a ±100 mV variable AC $V_{DD}$ centered at 5 V reported as dB in a specified frequency range. The equation is shown below:

$$\mathrm{PSRR_O} = 20 \times \log\left(\frac{\Delta\mathrm{QVO}}{\Delta \mathrm{V_{DD}}}\right)$$

### Power-On Delay ($t_{PO}$)

Power-on delay ($t_{PO}$) of 100 µs is the amount of time required by the sensor to start up, fully power the chip, and become fully operational, from the moment the supply voltage is applied to it. This time includes the ramp-up time and the settling time (within 10% of steady-state voltage under an applied magnetic field) after the power supply has reached the minimum $V_{DD}$.

### Undervoltage Lockout (UVLO)

The undervoltage lockout protection circuitry of the CT415 and CT416 is activated when the supply voltage ($V_{DD}$) reduces to less than 2.45 V. The sensor remains in a low-quiescent state until $V_{DD}$ increases to greater than the UVLO threshold (2.5 V). In this condition, where $V_{DD}$ is less than 2.45 V and UVLO is triggered, the output from the sensor is not valid. Once $V_{DD}$ increases to greater than 2.5 V, the UVLO is cleared.



Allegro MicroSystems
955 Perimeter Road
Manchester, NH 03103-3353 U.S.A.
www.allegromicro.com

Downloaded from Arrow.com.

## Immunity to Common-Mode Fields

The CT415 and CT416 are housed in a custom plastic package that uses a U-shaped leadframe to reduce the common-mode fields generated as current flows through the current-carrying conductor. With the U-shaped leadframe, the stray fields cancel one another, thus reducing electromagnetic interference (EMI).

Also, a good printed circuit board (PCB) layout for the sensor can optimize performance and reduce EMI. For PCB layout recommendations, see the Recommended PCB Layout section.

## Creepage and Clearance

Two important terms that are related to isolation provided by the package are creepage and clearance. Creepage is defined as the shortest distance across the surface of the package from one side of the leads to the other side of the leads. Clearance is defined as the shortest distance between the leads of the opposite side through the air.

## Application

The CT415 and CT416 is an integrated contact current sensor that can be used in many applications from measuring current in power supplies, to motor control. It is a plug-and-play solution in that calibration is not required, and it outputs to a microcontroller a simple linear analog output voltage that corresponds to a current measurement value.

## Bypass Capacitor

A single 1 µF capacitor is needed for the VDD pin to reduce the noise from the power supply and other circuits. This capacitor should be placed as close as practical to the sensor to minimize inductance and resistance between the two devices.

## Filter Function (FILTER)

The CT415 and CT416 have a pin for the FILTER function which will enable it to improve the noise performance by changing the cutoff frequency. The bandwidth is 1.0 MHz; however, adding a capacitor to the FILTER pin—which will be in-series with an internal resistance of approximately 15 kΩ—will set the cutoff frequency to reduce noise.

Experimentally measured Bandwidth does not necessarily match the calculated bandwidth value obtained by using the equation

$$f_{BW} = \frac{1}{2\pi RC}$$

because of the parasitic capacitances due to PCB manufacturing and layout. This is further impacted by the small, picofarad level $C_{FILTER}$ recommendations.

## Recommended PCB Layout

Because the sensor can measure up to 65 A of current, special care must be taken in the printed circuit board (PCB) layout of the sensor and the surrounding circuitry. It is recommended that the CCC pins be connected to as much copper area as practical. It is also recommended that 2 oz. or heavier copper be used for PCB traces. Additional layers of the PCB should also be used to carry current, and these should be connected using the arrangement of vias. The recommended PCB layout is shown in Figure 9 and Figure 10.

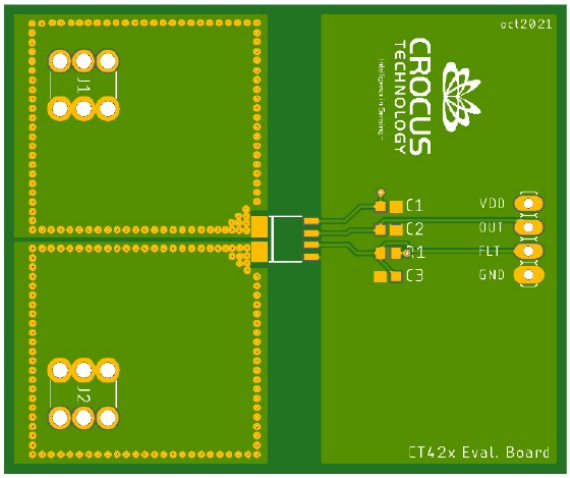


**Figure 9: Recommended PCB Layout (Top Layer)**

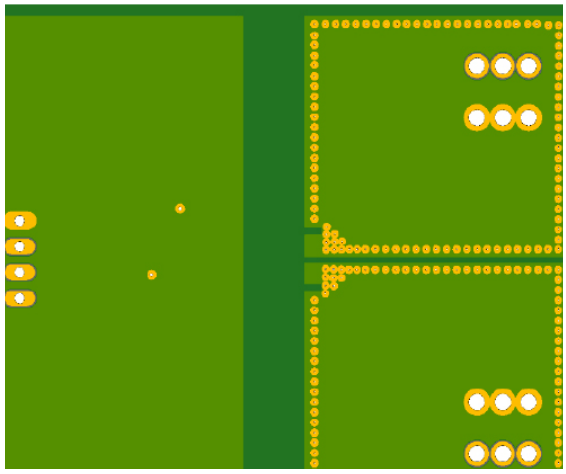

**Figure 10: Recommended PCB Layout (Bottom Layer)**



Allegro MicroSystems
955 Perimeter Road
Manchester, NH 03103-3353 U.S.A.
www.allegromicro.com

Downloaded from Arrow.com.

## Thermal Rise vs. Primary Current

Self-heating due to the flow of current should be considered during the design of any current sensing system. The sensor, printed circuit board (PCB), and contacts to the PCB generate heat as current moves through the system.

The thermal response is highly dependent on PCB layout, copper thickness, cooling techniques, and profile of the injected current.

The current profile includes peak current, current on-time, and duty cycle. While the data presented in this section was collected with direct current (DC), these values can be used to approximate thermal response for both AC signals and current pulses.

The measured rise in steady-state die temperature of the current sensor versus continuous current at an ambient temperature, $T_A$, of 25 °C is shown in Figure 11. The thermal offset curves can be directly applied to other values of $T_A$.

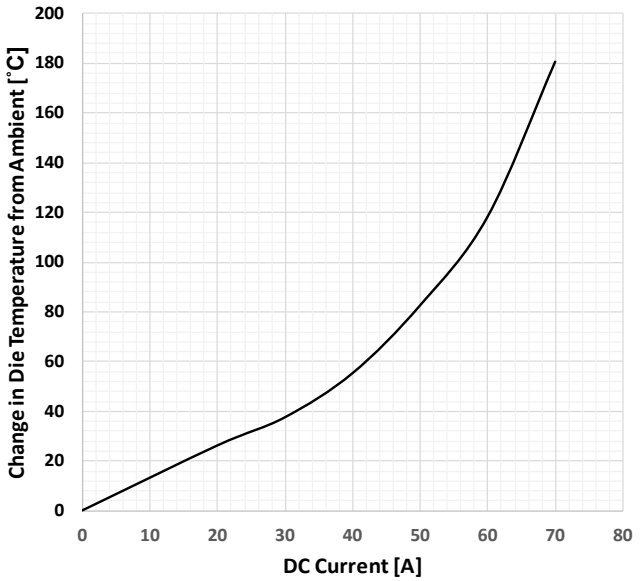


**Figure 11: Self-Heating in the SOIC-8 Package Due to Current Flow**



Allegro MicroSystems
955 Perimeter Road
Manchester, NH 03103-3353 U.S.A.
www.allegromicro.com

Downloaded from Arrow.com.

## PACKAGE OUTLINE DRAWING

### For Reference Only – Not for Tooling Use

Dimensions in millimeters – NOT TO SCALE

Dimensions exclusive of mold flash, gate burs, and dambar protrusions

Exact case and lead configuration at supplier discretion within limits shown

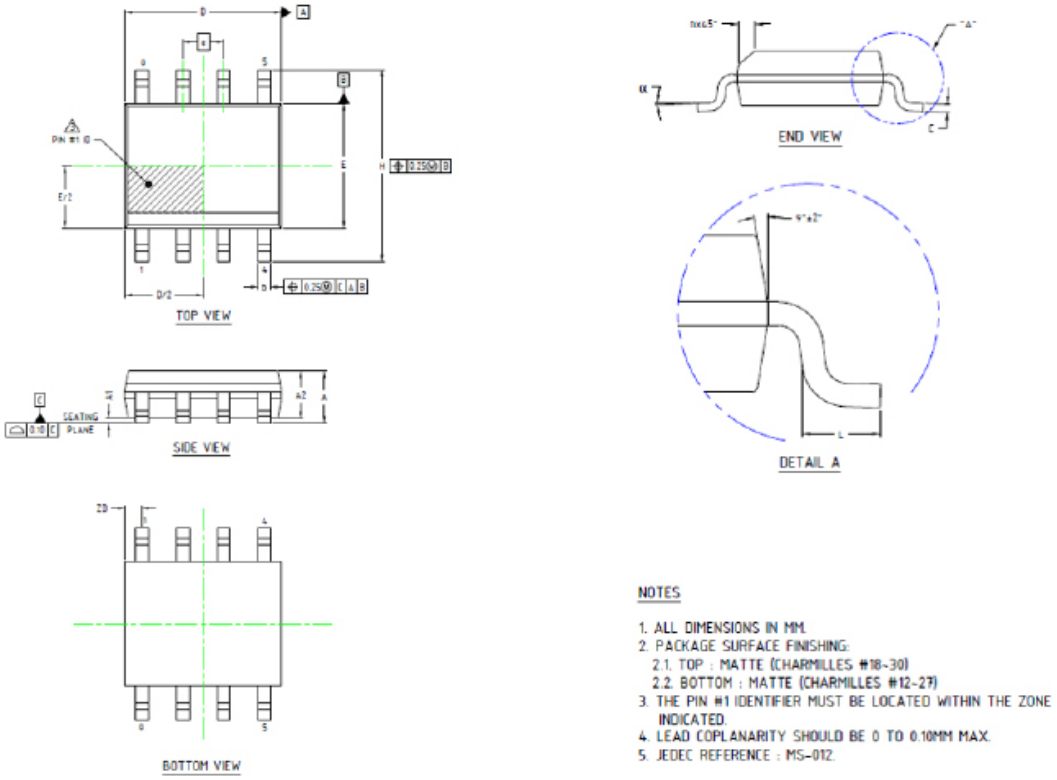


**Figure 12: SOIC-8 Package Drawing and Dimensions**

**Table 1: CT415 SOIC-8 Package Dimensions**

| Symbol | Dimensions in Millimeters (mm) | | |
|---|---|---|---|
| | Min. | Typ. | Max. |
| A1 | 0.10 | 0.18 | 0.25 |
| b | 0.36 | 0.41 | 0.46 |
| C | 0.19 | 0.22 | 0.25 |
| D | 4.80 | 4.89 | 4.98 |
| E | 3.81 | 3.90 | 3.99 |
| e | 1.27 BSC | | |
| H | 5.80 | 6.00 | 6.20 |
| h | 0.25 | 0.37 | 0.50 |
| L | 0.41 | – | 1.27 |
| A | 1.52 | 1.62 | 1.72 |
| α | 0° | – | 8° |
| ZD | 0.53 REF | | |
| A2 | 1.37 | 1.47 | 1.57 |



Allegro MicroSystems
955 Perimeter Road
Manchester, NH 03103-3353 U.S.A.
www.allegromicro.com

Downloaded from Arrow.com.

## TAPE AND REEL POCKET DRAWING AND DIMENSIONS

**For Reference Only – Not for Tooling Use**

Dimensions in millimeters – NOT TO SCALE

Dimensions exclusive of mold flash, gate burs, and dambar protrusions

Exact case and lead configuration at supplier discretion within limits shown

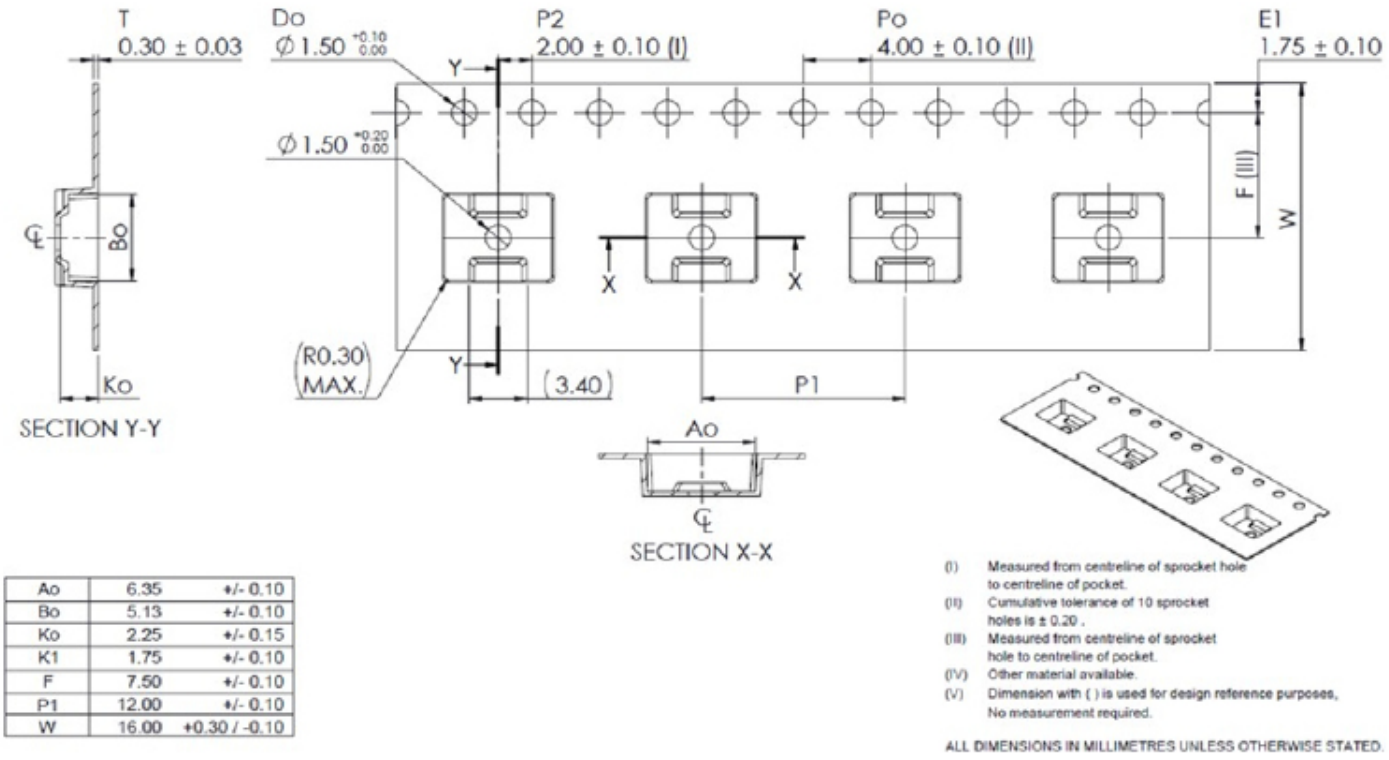


| | | |
|---|---|---|
| Ao | 6.35 | +/- 0.10 |
| Bo | 5.13 | +/- 0.10 |
| Ko | 2.25 | +/- 0.15 |
| K1 | 1.75 | +/- 0.10 |
| F | 7.50 | +/- 0.10 |
| P1 | 12.00 | +/- 0.10 |
| W | 16.00 | +0.30 / -0.10 |

**Figure 13: Tape and Pocket Drawing for SOIC-8 Package**



Allegro MicroSystems
955 Perimeter Road
Manchester, NH 03103-3353 U.S.A.
www.allegromicro.com

Downloaded from Arrow.com.

## DEVICE MARKING




**Figure 15: CT415 Device Marking for 8-lead Package**

**Table 2: CT415 Device Marking Definition for 8-Lead SOIC Package**

| Row No. | Code | Definition |
|---|---|---|
| 3 | • | Pin 1 Indicator |
| 1 | CT415 | Allegro Part Number |
| 1 | A | AEC-Q100 Qualified |
| 2 | P | Package Type |
| 2 | N | Number of Pins |
| 2 | XX | Current Range |
| 2 | ZR | Polarity |
| 3 | YY | Calendar Year |
| 3 | WW | Work Week |
| 3 | LL | Lot Code |




**Figure 14: CT416 Device Marking for 8-Lead Package**

**Table 3: CT416 Device Marking Definition for 8-lead SOIC Package**

| Row No. | Code | Definition |
|---|---|---|
| 3 | • | Pin 1 Indicator |
| 1 | CT416 | Allegro Part Number |
| 1 | A | AEC-Q100 Qualified |
| 2 | P | Package Type |
| 2 | N | Number of Pins |
| 2 | XX | Current Range |
| 2 | ZR | Polarity |
| 3 | YY | Calendar Year |
| 3 | WW | Work Week |
| 3 | LL | Lot Code |



Allegro MicroSystems
955 Perimeter Road
Manchester, NH 03103-3353 U.S.A.
www.allegromicro.com

Downloaded from Arrow.com.

## Revision History

| Number | Date | Description |
|---|---|---|
| 7 | July 16, 2026 | Comprehensive overhaul of the whole document. Removal of Total Output Error definition and specification. |

Copyright 2026, Allegro MicroSystems.

Allegro MicroSystems reserves the right to make, from time to time, such departures from the detail specifications as may be required to permit improvements in the performance, reliability, or manufacturability of its products. Before placing an order, the user is cautioned to verify that the information being relied upon is current.

Allegro's products are not to be used in any devices or systems, including but not limited to life support devices or systems, in which a failure of Allegro's product can reasonably be expected to cause bodily harm.

The information included herein is believed to be accurate and reliable. However, Allegro MicroSystems assumes no responsibility for its use; nor for any infringement of patents or other rights of third parties which may result from its use.

Copies of this document are considered uncontrolled documents.

For the latest version of this document, visit our website:

www.allegromicro.com



Allegro MicroSystems
955 Perimeter Road
Manchester, NH 03103-3353 U.S.A.
www.allegromicro.com

Downloaded from Arrow.com.