THIS DRAWING IS UNPUBLISHED. RELEASED FOR PUBLICATION 20
© COPYRIGHT 20 BY - ALL RIGHTS RESERVED.

REVISIONS

P	LTR	DESCRIPTION	DATE	DWN	APVD
	A	INITIAL RELEASE	07JUN2016	DW	CW
	B	ECR-20-016312	03JUN2021	BS	CW

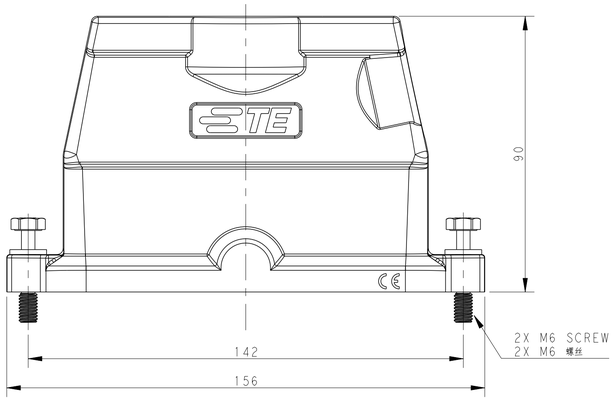

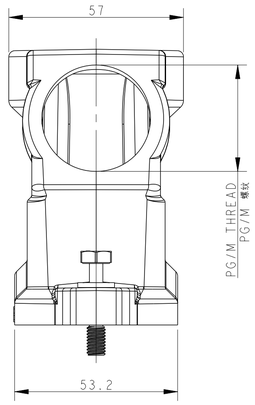

NOTES:
1.TECHNICAL CHARACTERISTICS:
HOOD MATERIAL: DIE CAST ALUMINIUM ALLOY
SURFACE: SEE TABLE
DEGREE OF PROTECTION: IP68 (MATED)

注释
1.技术参数:
壳体材料: 铝合金
表面处理: 见表格
防护等级: IP68 (配合)

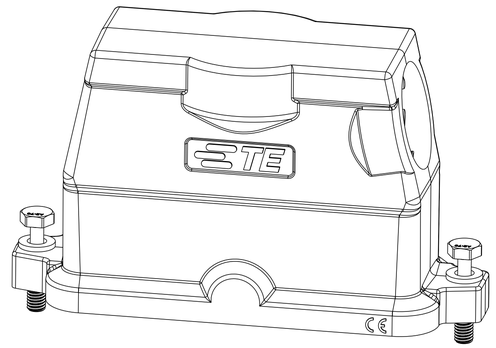

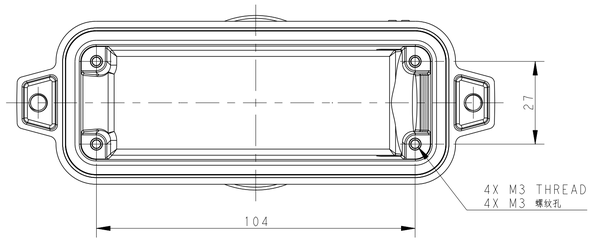

PART NUMBER 料号	DESCRIPTION 描述	PG/M THREAD PG/M 螺纹
T191224140-009	H24BPR-TSHC-M40-EMC-C H24BPR HOOD,CENTER LOCKING,SIDE ENTRY M40,POWDER COATED,SILVER WHITE H24BPR中部锁定侧出上壳M40 银白色	M40
T191224132-009	H24BPR-TSHC-M32-EMC-C H24BPR HOOD,CENTER LOCKING,SIDE ENTRY M32,POWDER COATED,SILVER WHITE H24BPR中部锁定侧出上壳M32 银白色	M32
T191224129-009	H24BPR-TSHC-PG29-EMC-C H24BPR HOOD,CENTER LOCKING,SIDE ENTRY PG29,POWDER COATED,SILVER WHITE H24BPR中部锁定侧出上壳PG29 银白色	PG29
T191224125-009	H24BPR-TSHC-M25-EMC-C H24BPR HOOD,CENTER LOCKING,SIDE ENTRY M25,POWDER COATED,SILVER WHITE H24BPR中部锁定侧出上壳M25 银白色	M25
T191224121-009	H24BPR-TSHC-PG21-EMC-C H24BPR HOOD,CENTER LOCKING,SIDE ENTRY PG21,POWDER COATED,SILVER WHITE H24BPR中部锁定侧出上壳PG21 银白色	PG21
T191224014 0-009	H24BPR-TSHC-M40-EMC-C H24BPR HOOD,CENTER LOCKING,SIDE ENTRY M40,POWDER COATED,BLACK H24BPR中部锁定侧出上壳M40 黑色	M40
T191224013 2-009	H24BPR-TSHC-M32-EMC-C H24BPR HOOD,CENTER LOCKING,SIDE ENTRY M32,POWDER COATED,BLACK H24BPR中部锁定侧出上壳M32 黑色	M32
T191224012 9-009	H24BPR-TSHC-PG29-EMC-C H24BPR HOOD,CENTER LOCKING,SIDE ENTRY PG29,POWDER COATED,BLACK H24BPR中部锁定侧出上壳PG29 黑色	PG29
T191224012 5-009	H24BPR-TSHC-M25-EMC-C H24BPR HOOD,CENTER LOCKING,SIDE ENTRY M25,POWDER COATED,BLACK H24BPR中部锁定侧出上壳M25 黑色	M25
T191224012 1-009	H24BPR-TSHC-PG21-EMC-C H24BPR HOOD,CENTER LOCKING,SIDE ENTRY PG21,POWDER COATED,BLACK H24BPR中部锁定侧出上壳PG21 黑色	PG21

THIS DRAWING IS A CONTROLLED DOCUMENT.

DIMENSIONS: mm

TOLERANCES UNLESS OTHERWISE SPECIFIED:
0 PLC ±-
1 PLC ±-
2 PLC ±-
3 PLC ±-
4 PLC ±-
ANGLES ±-

MATERIAL - -
FINISH - -

DWN DAVID WANG 07JUN2016
CHK CHRIS WANG 07JUN2016
APVD XIANG XU 07JUN2016
PRODUCT SPEC 108-137191
APPLICATION SPEC 114-137191
WEIGHT -

TE Connectivity

NAME H24BPR-TSHC-PG/M-EMC-C

SIZE A1 | CAGE CODE - | DRAWING NO C-T191224XXXXX09 | RESTRICTED TO

CUSTOMER DRAWING | SCALE 1:1 | SHEET 1 OF 1 | REV B

4805 (3/13)

printed on 7 Jun 2021 15:34 (China Standard Time) from TE2296667

Downloaded from Arrow.com.