VG95351 and VG96934 Qualified Products

About The VG Specifications

The German Federal Office of Defense Technology and Procurement (BWB) establishes procurement standards for defense items not covered by commercial specifications. VG standards are established by the Deutsches Institut für Normung (DIN). These standards are widely used in European and North American defense programs. Like their U.S. military specification counterparts, these VG specs require rigorous qualification testing in order to guarantee performance and interchangeability.

Which VG Spec is Preferred?

VG96934 covers the ten pin connector and is the preferred version for new applications. Choose the 10 pin connector per VG96934 if shielding is a requirement, or printed circuit tail contacts are required, or if the connector should be furnished with a backshell. These options are not available on the 7 pin connector covered by **VG95351**. Both the seven pin and the ten pin connector share identical external dimensions. VG95351 does not have provisions for alternate key positions. If keyed connectors are necessary, then use VG96934 ten pin connectors, or instead specify the appropriate Glenair CB Series connector.

VG 95351 SEVEN POLE CONNECTORS AND ACCESSORIES

VG PART NUMBER	GLENAIR PART NUMBER	CONFIGURATION	DESCRIPTION	PAGE
VG95351A7	CB07A1L0	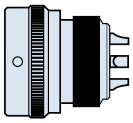	Cable Plug For use with heatshrink boot	Page 27
VG95351B7	CB07B1L0	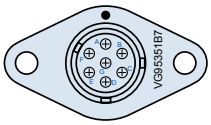	Flange Mount Receptacle for panel mounting	Page 27 Panel cutout page 13
VG95351C7	CB07C1L0	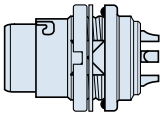	Jam Nut Receptacle for rear panel mounting	Page 27 Panel cutout page 13
VG95351D7	CB07D1L0	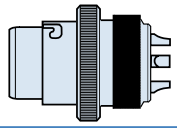	In-Line Receptacle for free-hanging cables	Page 28
VG95351E7	CB07Q1L0	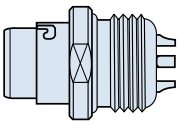	Thread-In Panel Mount Receptacle with PG9 thread	Page 28 Panel cutout page 13
VG95351Z1	CBGK-B		Elastomeric Gasket for use with Style B flange mount receptacle	Page 28
VG95351Z2	CBOR-B		O-Ring for use with Style B flange mount connector	Page 28

© 2008 Glenair, Inc.

Downloaded from Arrow.com.

VG95351 STYLE A: PLUG

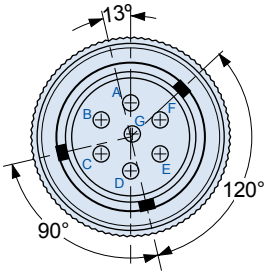

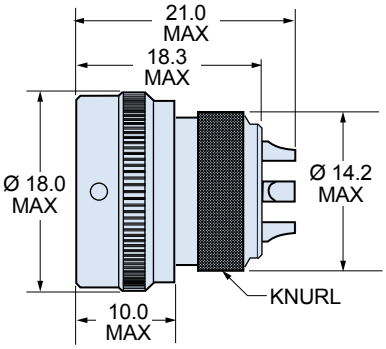

VG95351 A7
7 pin cable plug with solder cup contacts. Knurled platform for attachment of heatshrink boot for watertight seal. Maximum weight 7 grams.

VG Part Number	Glenair Part no.
VG95351A7	CB07A1L0

VG95351 STYLE B: FLANGE MOUNT RECEPTACLE

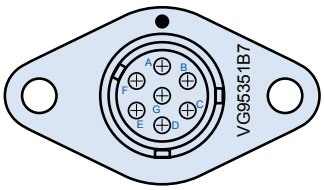

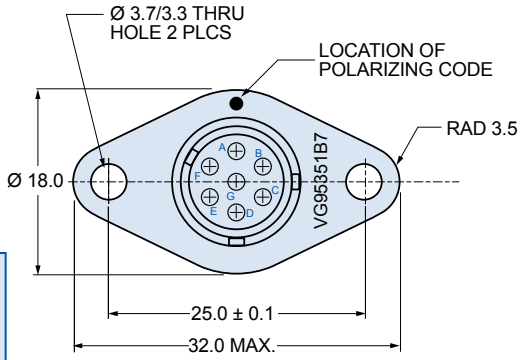

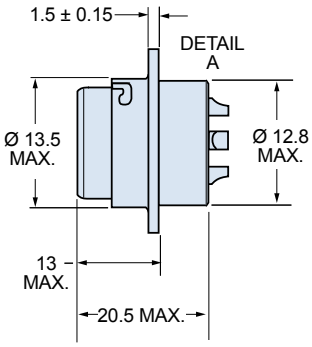

VG95351 B7
7 pin flange mount receptacle with solder cup contacts. Maximum weight 16 grams.

VG Part Number	Glenair Part no.
VG95351B7	CB07B1L0

VG95351 STYLE C: JAM NUT MOUNT RECEPTACLE

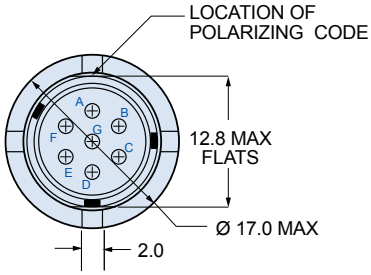

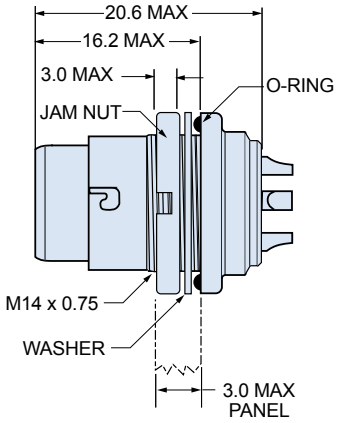

VG95351 C7
7 pin jam nut mount receptacle with solder cup contacts. Maximum weight 13 grams.

VG Part Number	Glenair Part no.
VG95351C7	CB07C1L0

© 2008 Glenair, Inc.

Downloaded from Arrow.com.

VG95351 and VG96934 Qualified Connectors

VG95351 STYLE D: IN-LINE RECEPTACLE

Shown with heatshrink boot purchased separately.

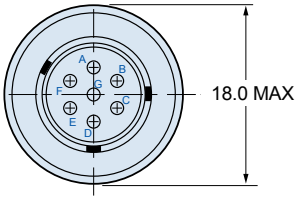

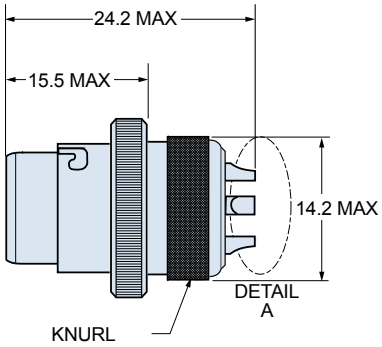

VG95351 D7
7 pin in-line receptacle with solder cup contacts. Maximum weight 16 grams.

VG Part Number	Glenair Part no.
VG95351D7	CB07D1L0

VG95351 STYLE E: THREADED-IN PANEL MOUNT RECEPTACLE

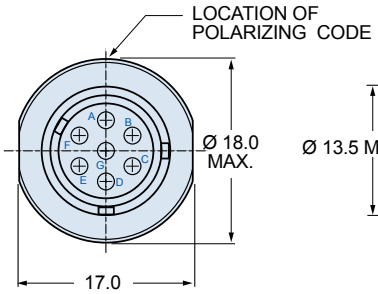

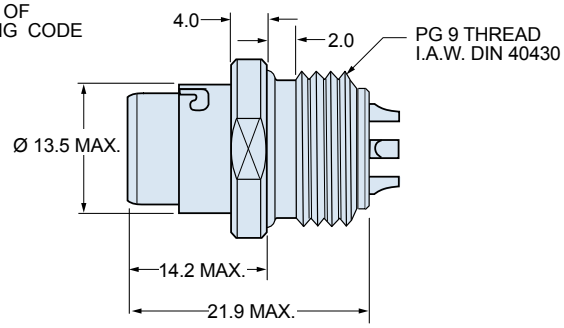

VG95351 E7
7 pin panel mount receptacle with PG9 thread and solder cup pins. Maximum weight 16 grams.

VG Part Number	Glenair Part no.
VG95351E7	CB07Q1L0

VG95351 STYLE Z1: GASKET

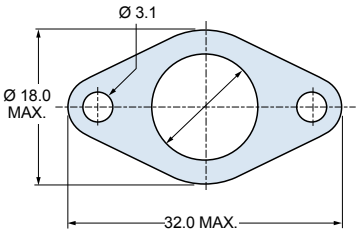

VG95351 Z1
Gasket for use with VG95351 Style B connector. Nitrile rubber. Maximum weight 3 grams.

VG Part Number	Glenair Part no.
VG95351Z1	CBGK-B

VG95351 STYLE Z2: O-RING

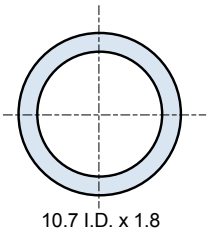

VG95351 Z2
O-ring for use with VG95351 Style B connector. Nitrile rubber. Maximum weight 2 grams.

VG Part Number	Glenair Part no.
VG95351Z2	CBOR-B

© 2008 Glenair, Inc.

Downloaded from Arrow.com.

VG96934 TEN PIN CONNECTORS AND ACCESSORIES

VG96934 STYLE	CONFIGURATION	DESCRIPTION	PAGE
STYLE A	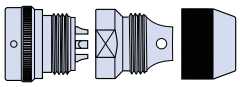	Cable plug with two piece shielded backshell	Page 30
STYLE B	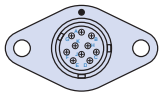	Flange mount receptacle	Page 30
STYLE C	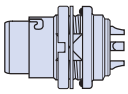	Jam nut receptacle	Page 31
STYLE D	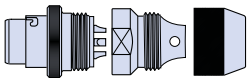	Unshrouded in-line receptacle with two piece shielded backshell	Page 31
STYLE E	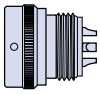	Panel mount plug with M14 x 1 rear thread	Page 32
STYLE F	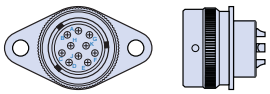	Panel mount plug with flange	Page 33
STYLE J	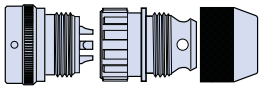	Plug with two piece shielded backshell	Page 33
STYLE K	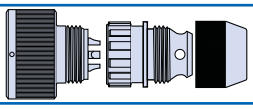	Shrouded receptacle with two piece shielded backshell	Page 34
STYLE L	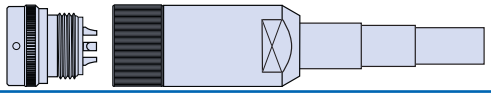	Plug with shielded environmental backshell and rubber strain relief	Page 34
STYLE M	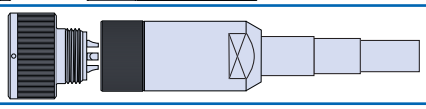	Shrouded receptacle with shielded environmental backshell and rubber strain relief	Page 35
STYLE N	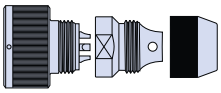	Shrouded receptacle with two piece shielded backshell	Page 35
STYLE Z2		O-ring for use with Style B and F	Page 36
STYLE Z3	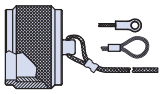	Aluminum plug cover for Styles A, E, F, J and L.	Page 36
STYLE Z4	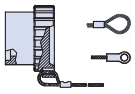	Rubber cover for receptacles	Page 36
STYLE Z6		Dummy stowage receptacle	Page 37

© 2008 Glenair, Inc.

Downloaded from Arrow.com.

VG95351 and VG96934 Qualified Connectors

VG96934 STYLE A: CABLE PLUG WITH SHIELDED BACKSHELL

VG96934A10*L0
10 pin cable plug with two piece shielded backshell. Requires heatshrink boot for watertight seal. ***Not for new design***. Replaced by Style J. Maximum weight 11 grams.

Key Pos.	VG Part Number	Glenair Part no.
N	VG96934A10NL0	CB10A1L0
W	VG96934A10WL0	CB10A2L0
X	VG96934A10XL0	CB10A3L0
Y	VG96934A10YL0	CB10A4L0
Z	VG96934A10ZL0	CB10A5L0

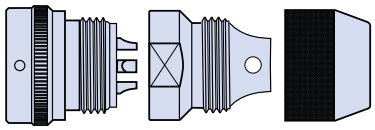

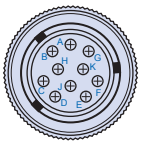

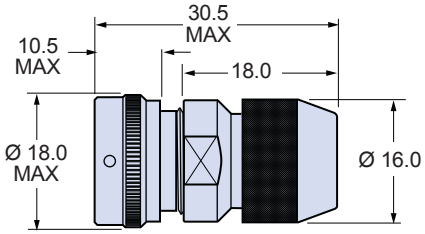

VG96934 STYLE B: FLANGE MOUNT RECEPTACLE

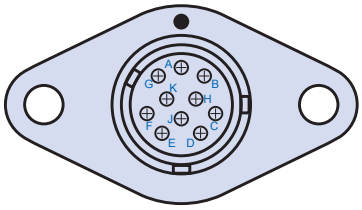

VG96934B10*L*
10 pin receptacle with panel mounting flange. Maximum weight 19 grams.

Terminal Style	Key Pos.	VG Part Number	Glenair Part no.
L0 Solder Cup	N	VG96934B10NL0	CB10B1L0
	W	VG96934B10WL0	CB10B2L0
	X	VG96934B10XL0	CB10B3L0
	Y	VG96934B10YL0	CB10B4L0
	Z	VG96934B10ZL0	CB10B5L0
L1 Standard PC Tail	N	VG96934B10NL1	CB10B1L1
	W	VG96934B10WL1	CB10B2L1
	X	VG96934B10XL1	CB10B3L1
	Y	VG96934B10YL1	CB10B4L1
	Z	VG96934B10ZL1	CB10B5L1
L2 Extended PC Tail	N	VG96934B10NL2	CB10B1L2
	W	VG96934B10WL2	CB10B2L2
	X	VG96934B10XL2	CB10B3L2
	Y	VG96934B10YL2	CB10B4L2
	Z	VG96934B10ZL2	CB10B5L2

Detail A Terminal Styles

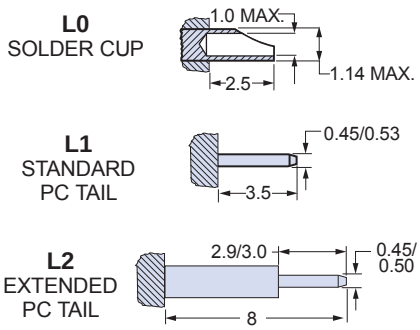

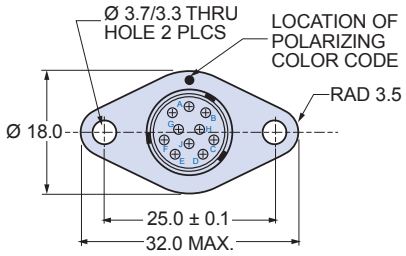

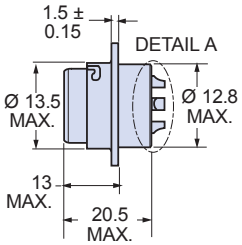

© 2008 Glenair, Inc.

Downloaded from Arrow.com.

VG96934 STYLE C: JAM NUT MOUNT RECEPTACLE

VG96934C10*L*
10 pin jam nut receptacle for rear panel mounting. Maximum weight 11 grams. Stainless steel shell with black chrome.

Terminal Style	Key Pos.	VG Part Number	Glenair Part no.
L0 Solder Cup	N	VG96934C10NL0	CB10C1L0
	W	VG96934C10WL0	CB10C2L0
	X	VG96934C10XL0	CB10C3L0
	Y	VG96934C10YL0	CB10C4L0
	Z	VG96934C10ZL0	CB10C5L0
L1 Standard PC Tail	N	VG96934C10NL1	CB10C1L1
	W	VG96934C10WL1	CB10C2L1
	X	VG96934C10XL1	CB10C3L1
	Y	VG96934C10YL1	CB10C4L1
	Z	VG96934C10ZL1	CB10C5L1
L2 Extended PC Tail	N	VG96934C10NL2	CB10C1L2
	W	VG96934C10WL2	CB10C2L2
	X	VG96934C10XL2	CB10C3L2
	Y	VG96934C10YL2	CB10C4L2
	Z	VG96934C10ZL2	CB10C5L2

Detail A Terminal Styles

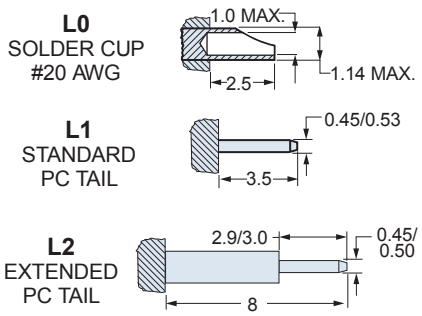

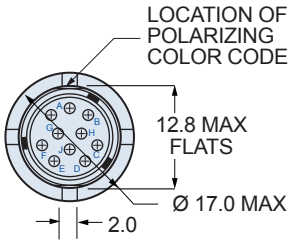

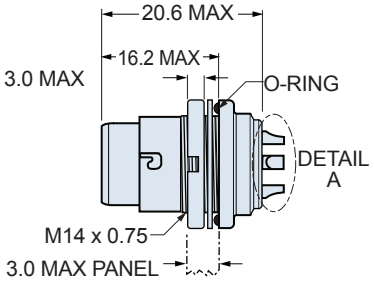

VG96934 STYLE D: UNSHROUDED IN-LINE RECEPTACLE WITH BACKSHELL

VG96934D10*L0
10 pin in-line unshrouded receptacle with two piece shielded aluminum backshell. 6 mm cable entry. Black zinc plating. ***Not for new design***. Replaced by Style K. Maximum weight 15 grams.

Key Pos.	VG Part Number	Glenair Part no.
N	VG96934D10NL0	CB10D1L0
W	VG96934D10WL0	CB10D2L0
X	VG96934D10XL0	CB10D3L0
Y	VG96934D10YL0	CB10D4L0
Z	VG96934D10ZL0	CB10D5L0

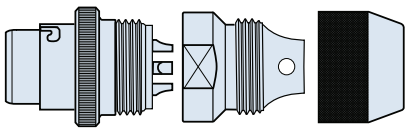

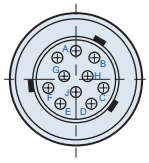

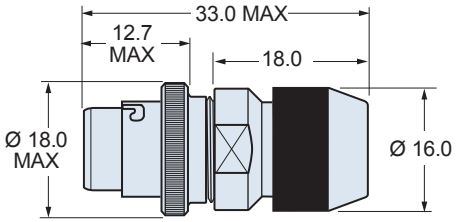

© 2008 Glenair, Inc.

Downloaded from Arrow.com.

VG95351 and VG96934 Qualified Connectors

VG96934 STYLE E: PANEL MOUNT PLUG

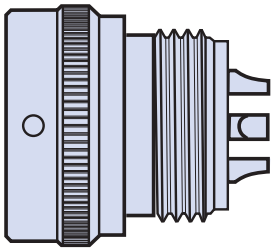

VG96934E10*L*
10 pin plug with M14 x 1 rear thread for use with accessories, or for installation into tapped panel. Maximum weight 7 grams.

Terminal Style	Key Pos.	VG Part Number	Glenair Part no.
L0 Solder Cup	N	VG96934E10NL0	CB10E1L0
	W	VG96934E10WL0	CB10E2L0
	X	VG96934E10XL0	CB10E3L0
	Y	VG96934E10YL0	CB10E4L0
	Z	VG96934E10ZL0	CB10E5L0
L1 Standard PC Tail	N	VG96934E10NL1	CB10E1L1
	W	VG96934E10WL1	CB10E2L1
	X	VG96934E10XL1	CB10E3L1
	Y	VG96934E10YL1	CB10E4L1
	Z	VG96934E10ZL1	CB10E5L1
L2 Extended PC Tail	N	VG96934E10NL2	CB10E1L2
	W	VG96934E10WL2	CB10E2L2
	X	VG96934E10XL2	CB10E3L2
	Y	VG96934E10YL2	CB10E4L2
	Z	VG96934E10ZL2	CB10E5L2

Detail A Terminal Styles

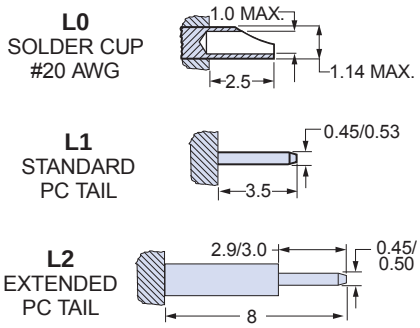

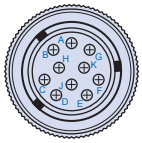

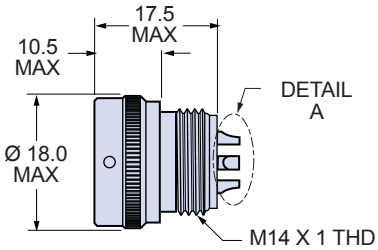

© 2008 Glenair, Inc.

Downloaded from Arrow.com.

VG96934 STYLE F: FLANGE MOUNT PLUG

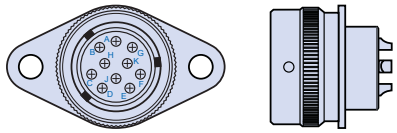

VG96934F10*L*
10 pin plug with panel mounting flange.
Maximum weight 19 grams.

Terminal Style	Key Pos.	VG Part Number	Glenair Part no.
L0 Solder Cup	N	VG96934F10NL0	CB10F1L0
	W	VG96934F10WL0	CB10F2L0
	X	VG96934F10XL0	CB10F3L0
	Y	VG96934F10YL0	CB10F4L0
	Z	VG96934F10ZL0	CB10F5L0
L1 Standard PC Tail	N	VG96934F10NL1	CB10F1L1
	W	VG96934F10WL1	CB10F2L1
	X	VG96934F10XL1	CB10F3L1
	Y	VG96934F10YL1	CB10F4L1
	Z	VG96934F10ZL1	CB10F5L1
L2 Extended PC Tail	N	VG96934F10NL2	CB10F1L2
	W	VG96934F10WL2	CB10F2L2
	X	VG96934F10XL2	CB10F3L2
	Y	VG96934F10YL2	CB10F4L2
	Z	VG96934F10ZL2	CB10F5L2

Detail A Terminal Styles

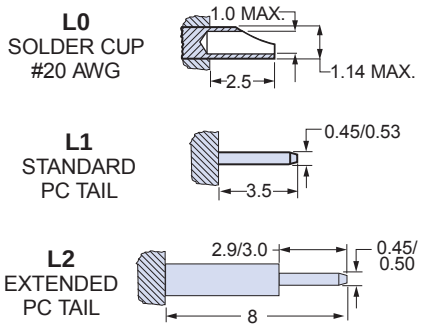

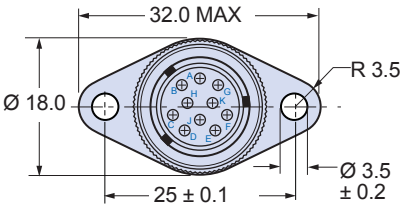

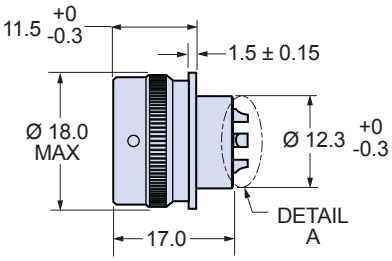

VG96934 STYLE J: PLUG WITH EMI BACKSHELL

VG96934J10*L0
10 pin plug with two piece shielded aluminum backshell. 9 mm cable entry. Black zinc plating. Add heat shrink boot for water ingress protection.

Key Pos.	VG Part Number	Glenair Part no.
N	VG96934J10NL0	CB10J1L0
W	VG96934J10WL0	CB10J2L0
X	VG96934J10XL0	CB10J3L0
Y	VG96934J10YL0	CB10J4L0
Z	VG96934J10ZL0	CB10J5L0

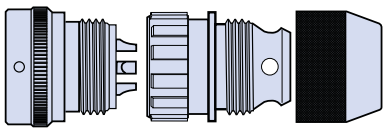

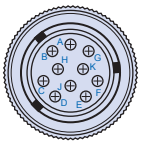

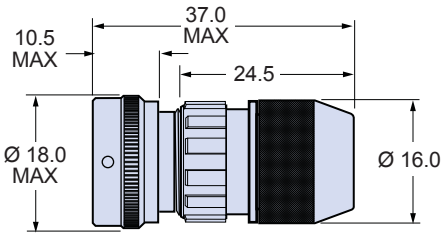

© 2008 Glenair, Inc.

Downloaded from Arrow.com.

VG95351 and VG96934 Qualified Connectors

VG96934 STYLE K: SHROUDED RECEPTACLE WITH BACKSHELL

VG96934K10*L0
10 pin shrouded receptacle with two piece shielded aluminum backshell. 9 mm cable entry. Black zinc plating. Add heat shrink boot for water ingress protection. Maximum weight 19 grams.

Key Pos.	VG Part Number	Glenair Part no.
N	VG96934K10NL0	CB10K1L0
W	VG96934K10WL0	CB10K2L0
X	VG96934K10XL0	CB10K3L0
Y	VG96934K10YL0	CB10K4L0
Z	VG96934K10ZL0	CB10K5L0

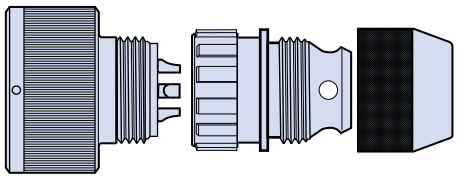

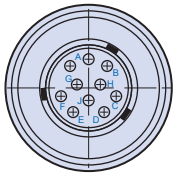

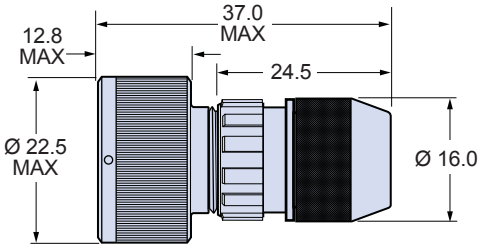

VG96934 STYLE L: PLUG WITH BACKSHELL AND RUBBER BUSHING

VG96934L10*L0
10 pin plug with two piece shielded aluminum backshell. Black zinc plating. Supplied with two O-rings , EMI ground ring and rubber bushing. Maximum weight 25 grams.

Key Pos.	VG Part Number	Glenair Part no.
N	VG96934L10NL0	CB10L1L0
W	VG96934L10WL0	CB10L2L0
X	VG96934L10XL0	CB10L3L0
Y	VG96934L10YL0	CB10L4L0
Z	VG96934L10ZL0	CB10L5L0

Material and Finish
O-Ring: Nitrile Rubber
Adapters and Ground Ring: Aluminum Alloy, Black Zinc Cobalt Finish
Bushing: Neoprene Rubber.

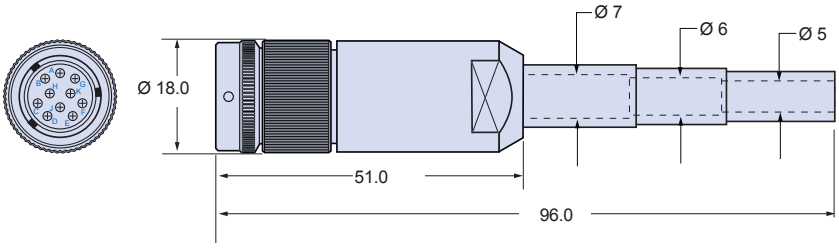

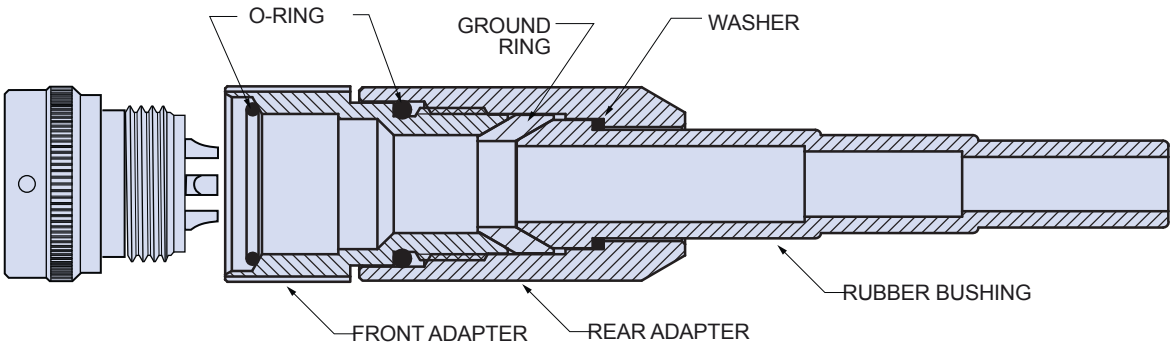

© 2008 Glenair, Inc.

Downloaded from Arrow.com.

VG96934 STYLE M: SHROUDED RECEPTACLE WITH BACKSHELL AND BUSHING

VG96934M10*L0
10 pin shrouded receptacle with two piece shielded aluminum backshell. Black zinc plating. Supplied with two O-rings , EMI ground ring and rubber bushing. Maximum weight 30 grams.

Key Pos.	VG Part Number	Glenair Part no.
N	VG96934M10NL0	CB10M1L0
W	VG96934M10WL0	CB10M2L0
X	VG96934M10XL0	CB10M3L0
Y	VG96934M10YL0	CB10M4L0
Z	VG96934M10ZL0	CB10M5L0

Material and Finish
O-Ring: Nitrile Rubber
Adapters and Ground Ring: Aluminum Alloy, Black Zinc Cobalt Finish
Bushing: Neoprene Rubber

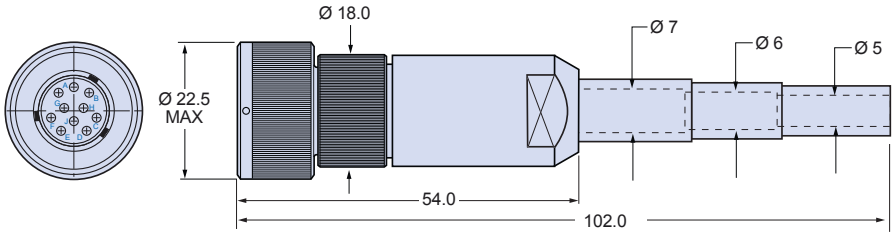

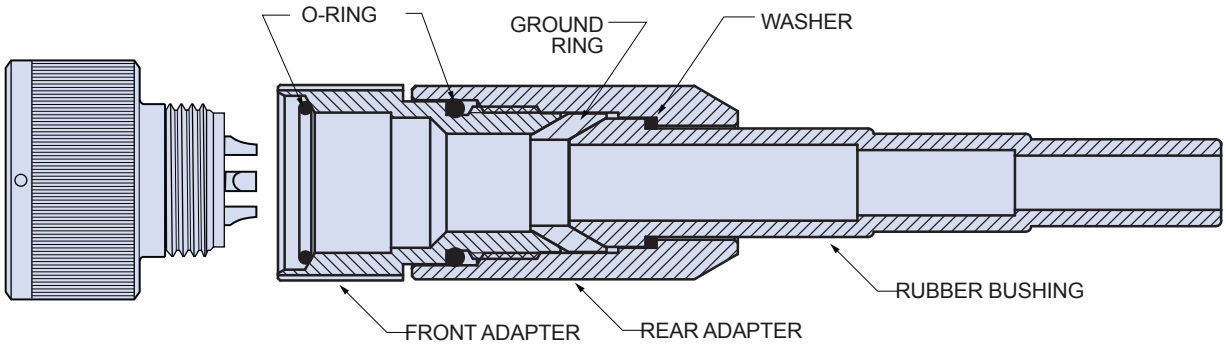

VG96934 STYLE N: IN-LINE RECEPTACLE WITH SHIELDED BACKSHELL

VG96934N10*L0
10 pin shrouded receptacle with two piece shielded aluminum backshell. 9 mm cable entry. Black zinc plating. Add heat shrink boot for water ingress protection. Maximum weight 18 grams.

Key Pos.	VG Part Number	Glenair Part no.
N	VG96934N10NL0	CB10N1L0
W	VG96934N10WL0	CB10N2L0
X	VG96934N10XL0	CB10N3L0
Y	VG96934N10YL0	CB10N4L0
Z	VG96934N10ZL0	CB10N5L0

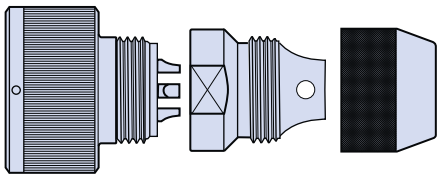

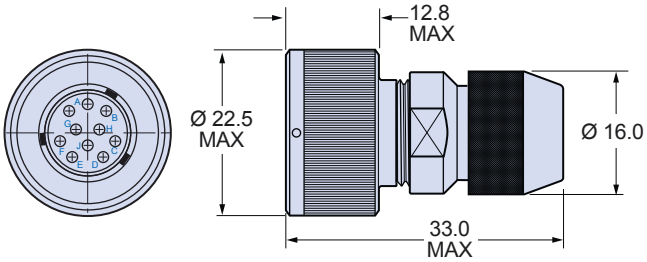

© 2008 Glenair, Inc.

Downloaded from Arrow.com.

VG95351 and VG96934 Qualified Connectors

VG96934 STYLE Z2: O-RING

VG96934Z2 Nitrile O-ring for use with connector style B and F	VG Part Number	Glenair Part no.
	VG96934Z2	CBOR-B

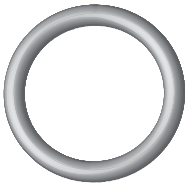

Material
O-Ring: Nitrile Rubber

VG96934 STYLE Z3: ALUMINUM PROTECTIVE COVER

VG96934Z3 Aluminum alloy protective cover, with crimp ferrule and ring terminal. Fits plug Styles A, E,F, J, and L. Maximum weight 8 grams.	VG Part Number	Glenair Part no.
	VG96934Z3	CBCAP-Z3

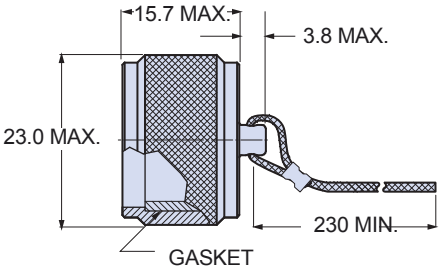

CRIMP FERRULE FOR CABLE ATTACHMENT (SUPPLIED LOOSE)

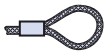

RING TERMINAL FOR PANEL ATTACHMENT (SUPPLIED LOOSE)

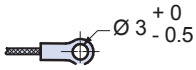

Material and Finish
Cover: Aluminum Alloy, Black Zinc-Cobalt Plating
Cord: Nylon
Ferrule and RIng: Stainless steel, Black Oxide Finish

VG96934 STYLE Z4: RUBBER PROTECTIVE COVER

VG96934Z4 Nitrile rubber protective cover supplied with crimp ferrule and ring terminal. Fits all receptacles. Maximum weight 5 grams.	VG Part Number	Glenair Part no.
	VG96934Z4	VG96934Z4

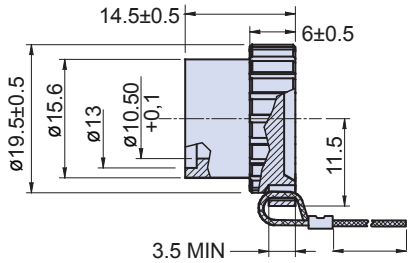

CRIMP FERRULE FOR CABLE ATTACHMENT (SUPPLIED LOOSE)

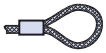

RING TERMINAL FOR PANEL ATTACHMENT (SUPPLIED LOOSE)

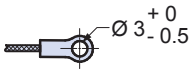

Materials
Cover: Nitrile Rubber
Cord: Nylon
Ferrule and RIng: Stainless steel, Black Oxide Finish

© 2008 Glenair, Inc.

Downloaded from Arrow.com.

VG96934 STYLE Z6: PANEL MOUNT DUMMY STOWAGE RECEPTACLE

VG96934Z6
Dummy receptacle mounts to panel with screw and provides protection to unused plugs.

VG Part Number	Glenair Part no.
VG96934Z6	CBCAP-Z6

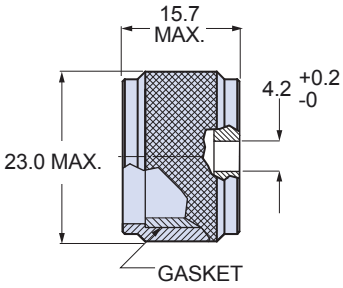

Material and Finish
Cover: Aluminum Alloy, Black Zinc Cobalt finish
Gasket: Silicone rubber

VG96934 KEY POSITIONS AND CONTACT ARRANGEMENTS

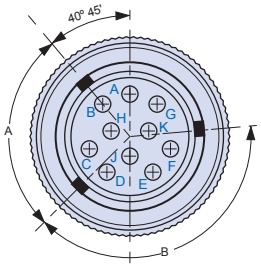

Plug

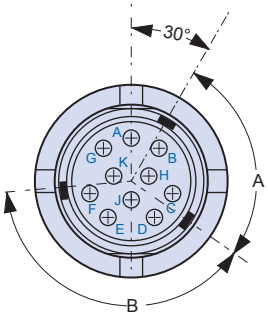

Receptacle

Position	A	B	Color Code
N	95°	140°	White
W	85°	115°	Blue
X	100°	105°	Violet
Y	110°	120°	Chrome Yellow
Z	80°	145°	Dark Red

Key Positions

VG96934 PRINTED CIRCUIT BOARD ARRANGEMENTS

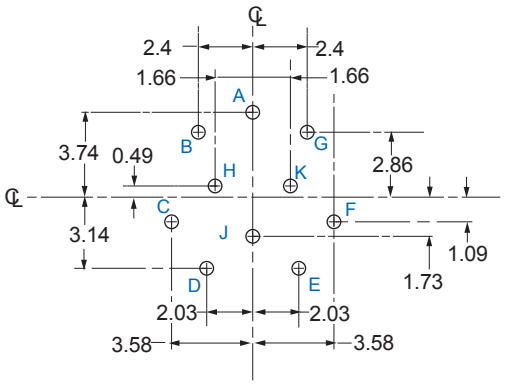

VG96934 Styles E and F
Panel Mount Plug

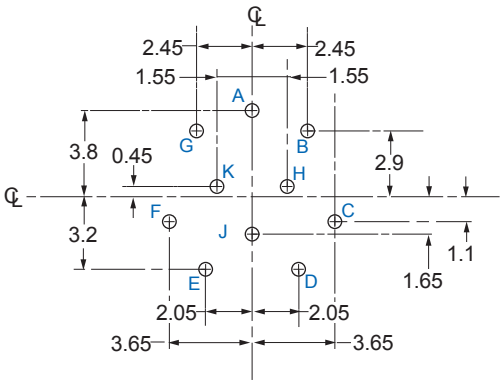

VG96934 Styles B and C
Panel Mount Receptacle

© 2008 Glenair, Inc.

Downloaded from Arrow.com.

VG95351 and VG96934 Qualified Connectors

VG96934 PANEL CUTOUTS

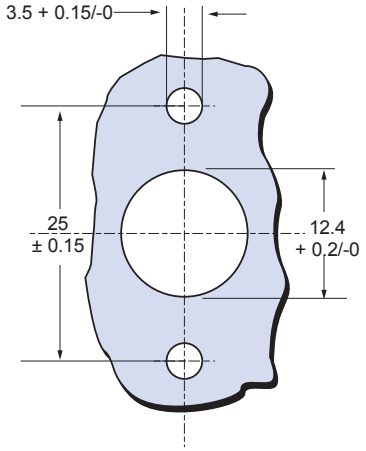

1 Panel cutout for Style B and F without O-ring.

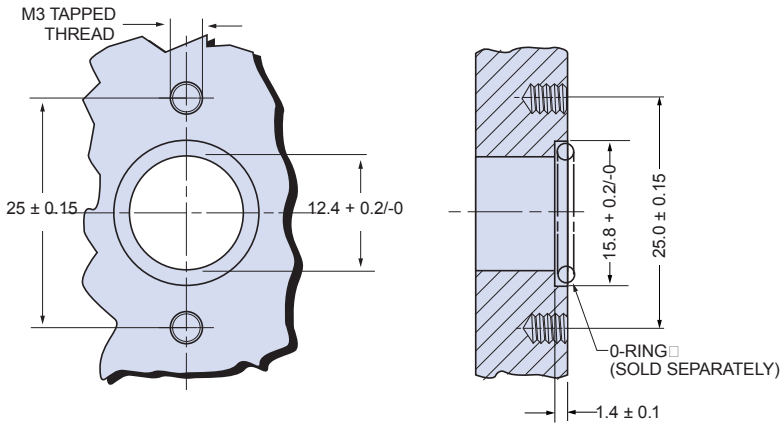

2 Panel cutout for Style B and F with O-ring VG96934Z2.

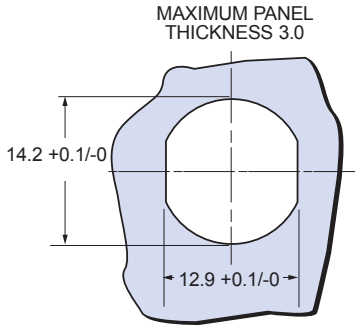

3 Panel cutout for Style C

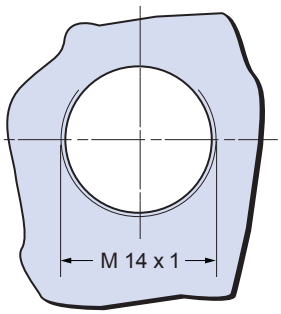

4 Panel cutout for Style E

© 2008 Glenair, Inc.

Downloaded from Arrow.com.