Octal Bus Buffer

Inverting

MC74VHC540

The MC74VHC540 is an advanced high speed CMOS inverting octal bus buffer fabricated with silicon gate CMOS technology. It achieves high speed operation similar to equivalent Bipolar Schottky TTL while maintaining CMOS low power dissipation.

The MC74VHC540 features inputs and outputs on opposite sides of the package and two AND−ed active−low output enables. When either $\overline{OE1}$ or $\overline{OE2}$ are high, the terminal outputs are in the high impedance state.

The internal circuit is composed of three stages, including a buffer output which provides high noise immunity and stable output. The inputs tolerate voltages up to 5.5 V, allowing the interface of 5.0 V systems to 3.0 V systems.

Features

- High Speed: t_{PD} = 3.7 ns (Typ) at V_{CC} = 5.0 V
- Low Power Dissipation: I_{CC} = 4.0 μA (Max) at T_A = 25°C
- High Noise Immunity: $V_{NIH} = V_{NIL}$ = 28% V_{CC}
- Power Down Protection Provided on Inputs
- Balanced Propagation Delays
- Designed for 2.0 V to 5.5 V Operating Range
- Low Noise: V_{OLP} = 1.2 V (Max)
- Pin and Function Compatible with Other Standard Logic Families
- Latchup Performance Exceeds 100 mA
- ESD Performance: HBM > 2000 V; Machine Model > 200 V
- Chip Complexity: 124 FETs or 31 Equivalent Gates
- These Devices are Pb−Free and are RoHS Compliant

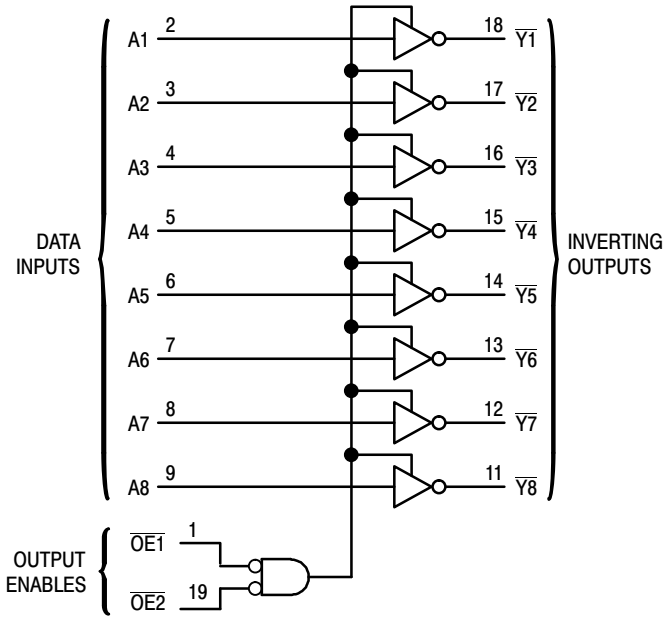

Figure 1. Logic Diagram

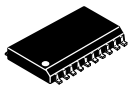

SOIC−20
DW SUFFIX
CASE 751D

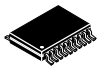

TSSOP−20
DT SUFFIX
CASE 948E

MARKING DIAGRAMS

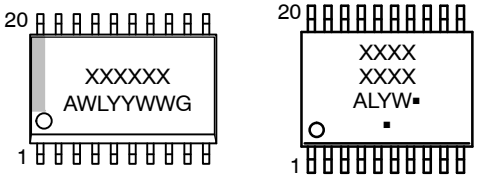

SOIC−20 **TSSOP−20**

A = Assembly Location
WL, L = Wafer Lot
YY, Y = Year
WW, W = Work Week
G or ▪ = Pb−Free Package

(Note: Microdot may be in either location)

PIN ASSIGNMENT

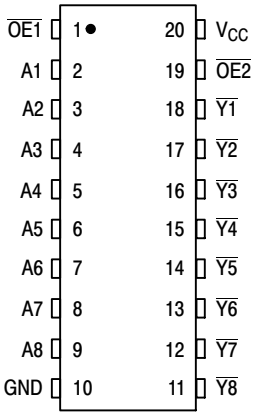

FUNCTION TABLE

Inputs			Output $\overline{Y}$
$\overline{OE1}$	$\overline{OE2}$	A	
L	L	L	H
L	L	H	L
H	X	X	Z
X	H	X	Z

ORDERING INFORMATION

See detailed ordering and shipping information on page 6 of this data sheet.

© Semiconductor Components Industries, LLC, 2011

Downloaded from Arrow.com.

MAXIMUM RATINGS

Symbol	Parameter		Value	Unit
V_{CC}	DC Supply Voltage		−0.5 to +6.5	V
V_{IN}	DC Input Voltage		−0.5 to +6.5	V
V_{OUT}	DC Output Voltage		−0.5 to V_{CC}+0.5	V
I_{IN}	DC Input Current, per Pin		±20	mA
I_{OUT}	DC Output Current, Per Pin		±25	mA
I_{CC}	DC Supply Current, V_{CC} and GND Pins		±75	mA
I_{IK}	Input Clamp Current		−20	mA
I_{OK}	Output Clamp Current		±20	mA
T_{STG}	Storage Temperature Range		−65 to +150	°C
T_L	Lead Temperature, 1 mm from Case for 10 secs		260	°C
T_J	Junction Temperature Under Bias		+150	°C
θ_{JA}	Thermal Resistance (Note 1)	SOIC−20W TSSOP−20	96 150	°C/W
P_D	Power Dissipation in Still Air at 25°C	SOIC−20W TSSOP−20	1302 833	mW
MSL	Moisture Sensitivity	SOIC−20W All Other Packages	Level 3 Level 1	−
F_R	Flammability Rating	Oxygen Index: 28 to 34	UL 94 V−0 @ 0.540 in	−
V_{ESD}	ESD Withstand Voltage (Note 2)	Human Body Model Charged Device Model	2000 N/A	V
$I_{LATCHUP}$	Latchup Performance (Note 3)		±100	mA

Stresses exceeding those listed in the Maximum Ratings table may damage the device. If any of these limits are exceeded, device functionality should not be assumed, damage may occur and reliability may be affected.

1. Measured with minimum pad spacing on an FR4 board, using 76 mm−by−114 mm, 2−ounce copper trace no air flow per JESD51−7.
2. HBM tested to EIA / JESD22−A114−A. CDM tested to JESD22−C101−A. JEDEC recommends that ESD qualification to EIA/JESD22−A115A (Machine Model) be discontinued.
3. Tested to EIA/JESD78 Class II.

RECOMMENDED OPERATING CONDITIONS

Symbol	Parameter		Min	Max	Unit
V_{CC}	DC Supply Voltage		2.0	5.5	V
V_{IN}	DC Input Voltage (Note 4)		0	5.5	V
V_{OUT}	DC Output Voltage (Note 4)		0	V_{CC}	V
T_A	Operating Temperature		−55	+125	°C
t_r, t_f	Input Rise or Fall Rate	V_{CC} = 3.0 V to 3.6 V V_{CC} = 4.5 V to 5.5 V	0 0	100 20	ns/V

Functional operation above the stresses listed in the Recommended Operating Ranges is not implied. Extended exposure to stresses beyond the Recommended Operating Ranges limits may affect device reliability.

4. Unused inputs must always be tied to an appropriate logic voltage level (e.g., either GND or V_{CC}). Unused outputs must be left open.

Share Feedback
Your Opinion Matters

Downloaded from Arrow.com.

DC ELECTRICAL CHARACTERISTICS (MC74VHC540)

Symbol	Parameter	Test Conditions	V_{CC} V	T_A = 25°C			T_A = − 55 to 125°C		Unit
				Min	Typ	Max	Min	Max	
V_{IH}	Minimum High−Level Input Voltage		2.0 3.0 to 5.5	1.50 V_{CC} x 0.7			1.50 V_{CC} x 0.7		V
V_{IL}	Maximum Low−Level Input Voltage		2.0 3.0 to 5.5			0.50 V_{CC} x 0.3		0.50 V_{CC} x 0.3	V
V_{OH}	Minimum High−Level Output Voltage	V_{in} = V_{IH} or V_{IL} I_{OH} = − 50 μA	2.0 3.0 4.5	1.9 2.9 4.4	2.0 3.0 4.5		1.9 2.9 4.4		V
		V_{in} = V_{IH} or V_{IL} I_{OH} = − 4 mA I_{OH} = − 8 mA	3.0 4.5	2.58 3.94			2.48 3.80		
V_{OL}	Maximum Low−Level Output Voltage	V_{in} = V_{IH} or V_{IL} I_{OL} = 50 μA	2.0 3.0 4.5		0.0 0.0 0.0	0.1 0.1 0.1		0.1 0.1 0.1	V
		V_{in} = V_{IH} or V_{IL} I_{OL} = 4 mA I_{OL} = 8 mA	3.0 4.5			0.36 0.36		0.44 0.44	
I_{in}	Maximum Input Leakage Current	V_{in} = 5.5 V or GND	0 to 5.5			±0.1		±1.0	μA
I_{OZ}	Maximum Three−State Leakage Current	V_{in} = V_{IL} or V_{IH} V_{out} = V_{CC} or GND	5.5			±0.25		±2.5	μA
I_{CC}	Maximum Quiescent Supply Current	V_{in} = V_{CC} or GND	5.5			4.0		40.0	μA

Product parametric performance is indicated in the Electrical Characteristics for the listed test conditions, unless otherwise noted. Product performance may not be indicated by the Electrical Characteristics if operated under different conditions.

Share Feedback
Your Opinion Matters

Downloaded from Arrow.com.

AC ELECTRICAL CHARACTERISTICS (MC74VHC540)

Symbol	Parameter	Test Conditions	T_A = 25°C			T_A = − 55 to 125°C		Unit
			Min	Typ	Max	Min	Max	
t_{PLH}, t_{PHL}	Maximum Propagation Delay, A to $\overline{Y}$ (Figures 1 and 3)	V_{CC} = 3.3 ± 0.3 V C_L = 15 pF		4.8	7.0	1.0	8.5	ns
		C_L = 50 pF		7.3	10.5	1.0	12.0	
		V_{CC} = 5.0 ± 0.5 V C_L = 15 pF		3.7	5.0	1.0	6.0	
		C_L = 50 pF		5.2	7.0	1.0	8.0	
t_{PZL}, t_{PZH}	Output Enable TIme, $\overline{OE}$n to $\overline{Y}$ (Figures 2 and 4)	V_{CC} = 3.3 ± 0.3 V C_L = 15 pF		6.8	10.5	1.0	12.5	ns
		C_L = 50 pF		9.3	14.0	1.0	16.0	
		V_{CC} = 5.0 ± 0.5 V C_L = 15 pF		4.7	7.2	1.0	8.5	
		C_L = 50 pF		6.2	9.2	1.0	10.5	
t_{PLZ}, t_{PHZ}	Output Disable Time, $\overline{OE}$n to $\overline{Y}$ (Figures 2 and 4)	V_{CC} = 3.3 ± 0.3 V C_L = 50 pF		11.2	15.4	1.0	17.5	ns
		V_{CC} = 5.0 ± 0.5 V C_L = 50 pF		6.0	8.8	1.0	10.0	
t_{OSLH}, t_{OSHL}	Output to Output Skew	V_{CC} = 3.3 ± 0.3V C_L = 50 pF (Note 5)			1.5			ns
		V_{CC} = 5.0 ± 0.5V C_L = 50 pF (Note 5)			1.0			ns
C_{in}	Maximum Input Capacitance			4	10		10	pF
C_{out}	Maximum Three−State Output Capacitance (Output in High Impedance State)			6				pF

		Typical @ 25°C, V_{CC} = 5.0 V	
C_{PD}	Power Dissipation Capacitance (Note 6)	17	pF

5. Parameter guaranteed by design. $t_{OSLH} = |t_{PLHm} - t_{PLHn}|$, $t_{OSHL} = |t_{PHLm} - t_{PHLn}|$.
6. C_{PD} is defined as the value of the internal equivalent capacitance which is calculated from the operating current consumption without load. Average operating current can be obtained by the equation: $I_{CC(OPR)} = C_{PD} \bullet V_{CC} \bullet f_{in} + I_{CC}/8$ (per bit). C_{PD} is used to determine the no−load dynamic power consumption; $P_D = C_{PD} \bullet V_{CC}^2 \bullet f_{in} + I_{CC} \bullet V_{CC}$.

NOISE CHARACTERISTICS (MC74VHC540)

Symbol	Parameter	T_A = 25°C		Unit
		Typ	Max	
V_{OLP}	Quiet Output Maximum Dynamic V_{OL}	0.9	1.2	V
V_{OLV}	Quiet Output Minimum Dynamic V_{OL}	−0.9	−1.2	V
V_{IHD}	Minimum High Level Dynamic Input Voltage		3.5	V
V_{ILD}	Maximum Low Level Dynamic Input Voltage		1.5	V

Share Feedback
Your Opinion Matters

Downloaded from Arrow.com.

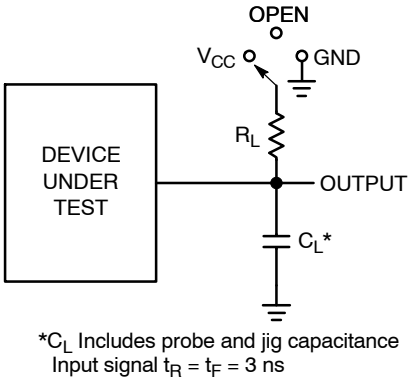

Test	Switch Position	C_L	R_L
t_{PLH} / t_{PHL}	Open	See AC Characteristics Table	1 kΩ
t_{PLZ} / t_{PZL}	V_{CC}		
t_{PHZ} / t_{PZH}	GND		

Figure 2. Test Circuits

SWITCHING WAVEFORMS

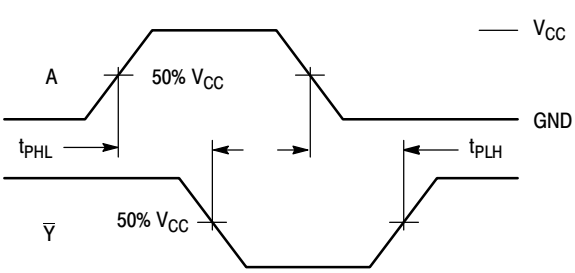

Figure 3.

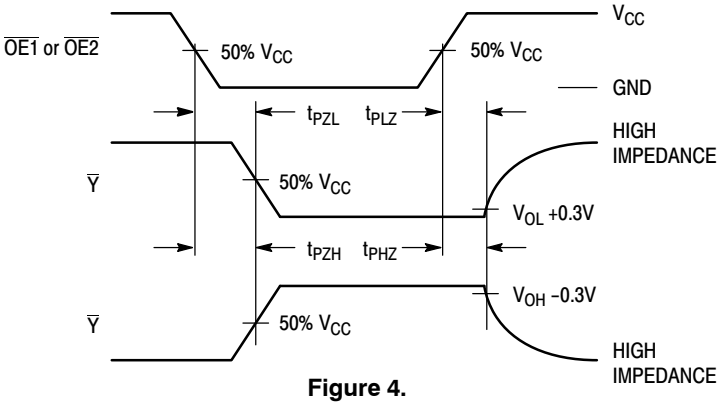

Figure 4.

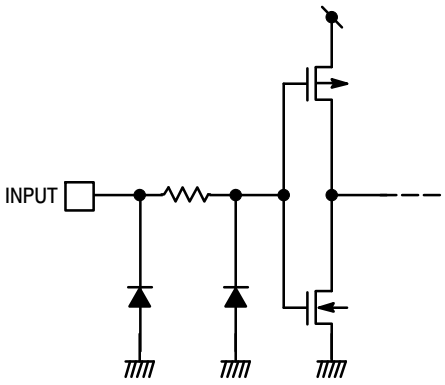

Figure 5. Input Equivalent Circuit

Share Feedback
Your Opinion Matters

Downloaded from Arrow.com.

ORDERING INFORMATION

Device	Marking	Package	Shipping†
MC74VHC540DWR2G	VHC540G	SOIC−20 WB	1000 / Tape & Reel
MC74VHC540DTR2G	VHC 540	TSSOP−20	2500 / Tape & Reel

†For information on tape and reel specifications, including part orientation and tape sizes, please refer to our Tape and Reel Packaging Specifications Brochure, BRD8011/D.

*−Q Suffix for Automotive and Other Applications Requiring Unique Site and Control Change Requirements; AEC−Q100 Qualified and PPAP Capable

Share Feedback
Your Opinion Matters

Downloaded from Arrow.com.

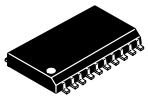

SOIC−20 WB
CASE 751D−05
ISSUE H

DATE 22 APR 2015

SCALE 1:1

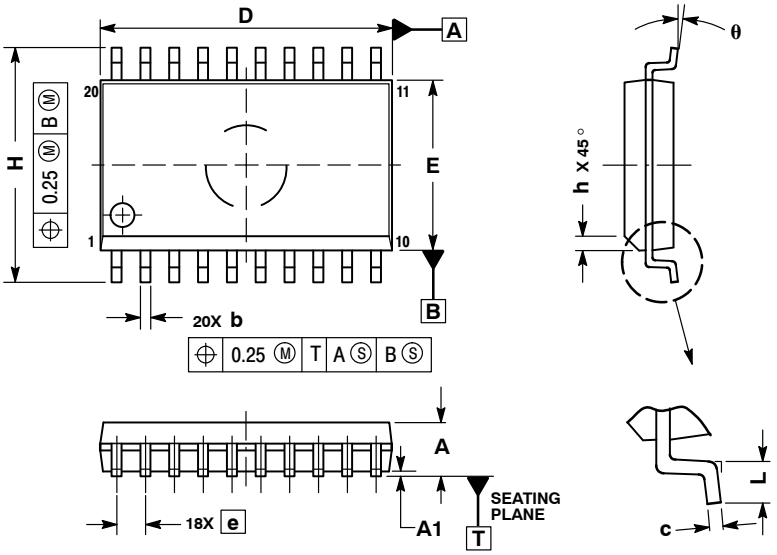

NOTES:
1. DIMENSIONS ARE IN MILLIMETERS.
2. INTERPRET DIMENSIONS AND TOLERANCES PER ASME Y14.5M, 1994.
3. DIMENSIONS D AND E DO NOT INCLUDE MOLD PROTRUSION.
4. MAXIMUM MOLD PROTRUSION 0.15 PER SIDE.
5. DIMENSION B DOES NOT INCLUDE DAMBAR PROTRUSION. ALLOWABLE PROTRUSION SHALL BE 0.13 TOTAL IN EXCESS OF B DIMENSION AT MAXIMUM MATERIAL CONDITION.

	MILLIMETERS	
DIM	MIN	MAX
A	2.35	2.65
A1	0.10	0.25
b	0.35	0.49
c	0.23	0.32
D	12.65	12.95
E	7.40	7.60
e	1.27 BSC	
H	10.05	10.55
h	0.25	0.75
L	0.50	0.90
θ	0°	7°

RECOMMENDED SOLDERING FOOTPRINT*

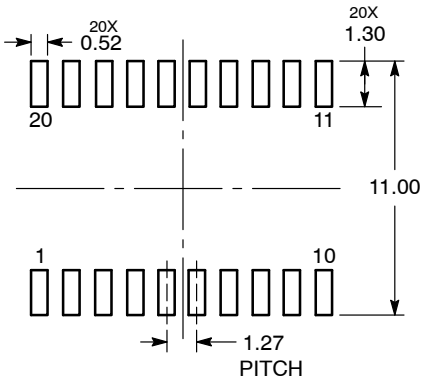

DIMENSIONS: MILLIMETERS

*For additional information on our Pb−Free strategy and soldering details, please download the **onsemi** Soldering and Mounting Techniques Reference Manual, SOLDERRM/D.

GENERIC MARKING DIAGRAM*

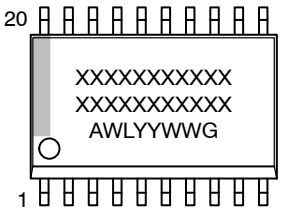

XXXXX = Specific Device Code
A = Assembly Location
WL = Wafer Lot
YY = Year
WW = Work Week
G = Pb−Free Package

*This information is generic. Please refer to device data sheet for actual part marking. Pb−Free indicator, “G” or microdot “▪”, may or may not be present. Some products may not follow the Generic Marking.

DOCUMENT NUMBER:	**98ASB42343B**	Electronic versions are uncontrolled except when accessed directly from the Document Repository. Printed versions are uncontrolled except when stamped “CONTROLLED COPY” in red.
DESCRIPTION:	**SOIC−20 WB**	**PAGE 1 OF 1**

onsemi and onsemi are trademarks of Semiconductor Components Industries, LLC dba **onsemi** or its subsidiaries in the United States and/or other countries. **onsemi** reserves the right to make changes without further notice to any products herein. **onsemi** makes no warranty, representation or guarantee regarding the suitability of its products for any particular purpose, nor does **onsemi** assume any liability arising out of the application or use of any product or circuit, and specifically disclaims any and all liability, including without limitation special, consequential or incidental damages. **onsemi** does not convey any license under its patent rights nor the rights of others.

Downloaded from Arrow.com.

onsemi, ONSEMI , and other names, marks, and brands are registered and/or common law trademarks of Semiconductor Components Industries, LLC dba "**onsemi**" or its affiliates and/or subsidiaries in the United States and/or other countries. **onsemi** owns the rights to a number of patents, trademarks, copyrights, trade secrets, and other intellectual property. A listing of **onsemi**'s product/patent coverage may be accessed at www.onsemi.com/site/pdf/Patent−Marking.pdf. **onsemi** reserves the right to make changes at any time to any products or information herein, without notice. The information herein is provided "as−is" and **onsemi** makes no warranty, representation or guarantee regarding the accuracy of the information, product features, availability, functionality, or suitability of its products for any particular purpose, nor does **onsemi** assume any liability arising out of the application or use of any product or circuit, and specifically disclaims any and all liability, including without limitation special, consequential or incidental damages. Buyer is responsible for its products and applications using **onsemi** products, including compliance with all laws, regulations and safety requirements or standards, regardless of any support or applications information provided by **onsemi**. "Typical" parameters which may be provided in **onsemi** data sheets and/or specifications can and do vary in different applications and actual performance may vary over time. All operating parameters, including "Typicals" must be validated for each customer application by customer's technical experts. **onsemi** does not convey any license under any of its intellectual property rights nor the rights of others. **onsemi** products are not designed, intended, or authorized for use as a critical component in life support systems or any FDA Class 3 medical devices or medical devices with a same or similar classification in a foreign jurisdiction or any devices intended for implantation in the human body. Should Buyer purchase or use **onsemi** products for any such unintended or unauthorized application, Buyer shall indemnify and hold **onsemi** and its officers, employees, subsidiaries, affiliates, and distributors harmless against all claims, costs, damages, and expenses, and reasonable attorney fees arising out of, directly or indirectly, any claim of personal injury or death associated with such unintended or unauthorized use, even if such claim alleges that **onsemi** was negligent regarding the design or manufacture of the part. **onsemi** is an Equal Opportunity/Affirmative Action Employer. This literature is subject to all applicable copyright laws and is not for resale in any manner.

ADDITIONAL INFORMATION

TECHNICAL PUBLICATIONS:
Technical Library: www.onsemi.com/design/resources/technical−documentation
onsemi Website: www.onsemi.com

ONLINE SUPPORT: www.onsemi.com/support
For additional information, please contact your local Sales Representative at www.onsemi.com/support/sales

◊

Downloaded from Arrow.com.