We connect and protect

Guide Rail Accessory Type, Strengthened, PC, 160 mm, 2 mm Groove Width, Red

CATALOG NUMBER

64568-076

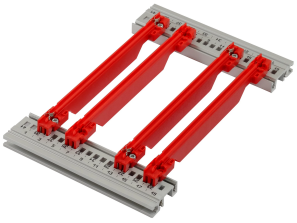

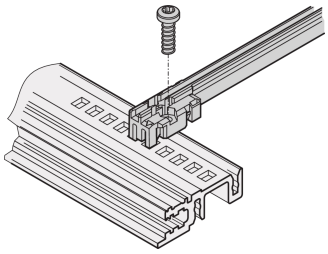

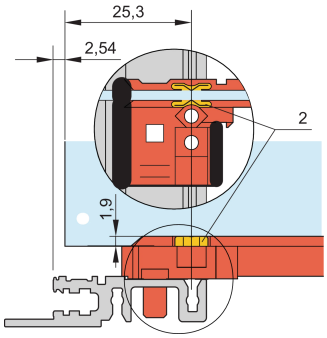

New generation of Strengthened Accessory type guide rails for PCBs or plug-in units. Forms a reliable interface between the subrack mechanics and the sub-assemblies. With the optimized design and the new high quality plastic material not just the stability was significantly increased, but also the fire safety properties improved. Which means the material ensures a low flammability, low smoke toxicity and density and fulfills the EN 45545-2 (Fire Safety in Railway Vehicle) requirements sets R22, R23 and R24 with the highest hazard level HL3. In addition the guide rails are also considered as “Halogen-Free”, according to IEC 61249-2-21.

CERTIFICATIONS

RoHS COMPLIANT

FEATURES

- NEW generation Strengthened Accessory type plastic guide rails for reliable retention of PCBs or plug-in units
- Significantly increased stability, due to a high quality material (PC) and an optimized design, which also allows now the usage with rugged horizontal rails
- Improved fire safety properties, fulfills EN 45545-2 requirement sets R22, R23 and R24 with HL3
- “Halogen-Free”, according to IEC 61249-2-21
- Can be clipped into horizontal rails (Al extrusion) or into 1.5 mm thick plates
- Can be bolted to the horizontal rails Type H and R for higher shock and vibration requirements
- Optional ESD clip for an conductive contact between PCB and horizontal rail available

Downloaded from Arrow.com.

Storage temperature: from -40 °C ... 130 °C

PRODUCT ATTRIBUTES

Package Quantity: 1

Color: Red

Complies With: EN 45545-2

Material: Fiber-Reinforced Plastic

Product Family: EuropacPRO; RatiopacPRO; RatiopacPRO AIR; CompacPRO; PropacPRO; MultipacPRO; Inpac

Product Type: Guide Rail

Type: Strengthened

Works With: Subracks; Cases; 19" Chassis; Systems

ADDITIONAL PRODUCT DETAILS

Please take into consideration that deliveries may be carried out in the stated SPQs (SPQ, e.g. 5 pieces, 10 pieces, 50 pieces, etc.). Differing order quantities (e.g. 2 pieces) may be changed to the next possible delivery quantity = Standard Pack Quantity.

WARNING

nVent products shall be installed and used only as indicated in nVent's product instruction sheets and training materials. Instruction sheets are available at www.nvent.com and from your nVent customer service representative. Improper installation, misuse, misapplication or other failure to completely follow nVent's instructions and warnings may cause product malfunction, property damage, serious bodily injury and death and/or void your warranty.

North America
All locations
+1.763.422.2661
Chat with us:
nvent.com/schroff

Europe
Straubenhardt, Germany
+49.7082.794.0
Betschdorf, France
+33.3.88.90.64.90
Warsaw, Poland
+48.22.209.98.35
Assago, Italy
+39.02.932.7141
Chat with us:
nvent.com/schroff

Asia
Shanghai, China
+86.21.2412.6943
Qingdao, China
+86.532.8771.6101
Singapore
+65.6768.5800
Shin-Yokohama, Japan
+81.45.476.0271
Chat with us:
nvent.com/schroff

Middle East & India
Dubai, United Arab Emirates
+971.4.378.1700
Bangalore, India
+91.80.6715.2001
Istanbul, Turkey
+90.216.250.7374
Chat with us:
nvent.com/schroff

Our powerful portfolio of brands:

CADDY ERICO HOFFMAN ILSCO SCHROFF TRACHTE

©2026 nVent. All nVent marks and logos are owned or licensed by nVent Services GmbH or its affiliates. All other trademarks are the property of their respective owners. nVent reserves the right to change specifications without notice.

This document is system-generated.

Downloaded from Arrow.com.