REVISIONS					
REV	ECO	DESCRIPTION	DATE	BY	APPR
A1	—	RELEASED DRAWING	Jul-30-2019	Zaki	Tommy

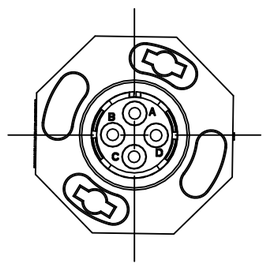

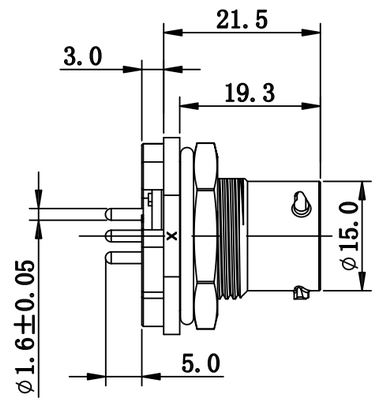

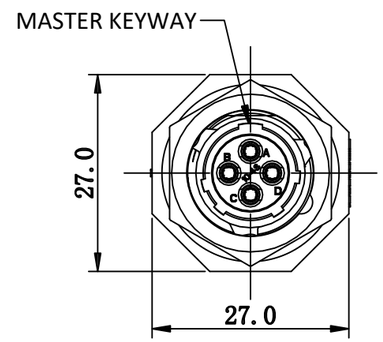

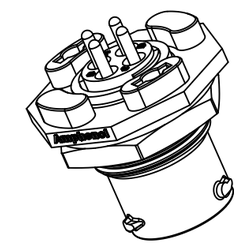

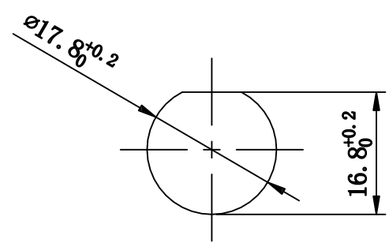

RECOMMEND MOUNTING HOLE

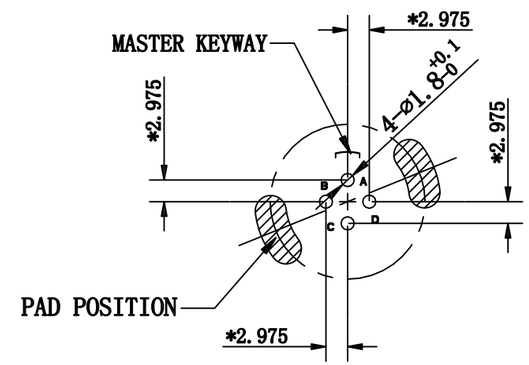

RECOMMEND PCB LAYOUT

NOTES: (UNLESS OTHERWISE SPECIFIED)
1. MATERIAL:
   SHELL: THERMOPLASTIC, UL94 V-0.
   INSERT: THERMOPLASTIC, UL94 V-0.
   O-RING: SILICONE RUBBER.
   SEAL GASKET: SILICONE RUBBER.
   JAM NUT: ALUMINIUM ALLOY, BLACK ANODIZING.
   CONTACT: COPPER ALLOY,GOLD PLATED.
2. SPECIFICATIONS:
   2.1 RATED CURRENT: 13A (MAX).
   2.2 RATED VOLTAGE: 500V(AC/DC).
   2.3 OPERATING TEMPERATURE: -40C - 125C.
   2.4 DIELECTRIC WITHSTANDING VOLTAGE: LESS THAN 2 MILLIAMPS CURRENT LEAKAGE@2000 VOLTS AC.
   2.5 INSULATION RESISTANCE: 5000 MEGOHMS MIN.
   2.6 IP--CLASS: IP67 AND IP69K IN THE MATED CONDITION.
   2.7 MATING CYCLES DURABILITY: 500 CYCLES MIN.
   2.8 RoHS COMPLIANT.
3. SUITABLE CONTACTS: 16# CONTACT.
4. ALL DIMENSIONS ARE FOR REFERENCE USE ONLY.

KEY	PART NUMBER
N	RTS710ND4S03
W	RTS710WD4S03
X	RTS710XD4S03
Y	RTS710YD4S03
Z	RTS710ZD4S03

QUANTITY	PART NUMBER	DESCRIPTION	ITEM

MATERIALS LIST

UNLESS OTHERWISE SPECIFIED
1) All dimensions are in metric(mm).
2) Tolerances are as follows:
1 PL DEC ±0.30 | Fractions ±1/64
2 PL DEC ±0.15 | Angles ±1°
3 PL DEC ±0.08
3) Note reference = X

MATERIAL SPECIFICATIONS:

PROCESS SPECIFICATIONS:

NEXT ASS'Y:

SIGNATURES		DATE
DRAWN:	Zaki	Jul-30-2019
CHECKED:	Martin	Jul-30-2019
ENGINEER:		
APPROVAL:	Tommy	Jul-30-2019
CUSTOMER:		

THIS DRAWING IS SUPPLIED FOR INFORMATION ONLY. DESIGN FEATURES, SPECIFICATIONS AND PERFORMANCE DATA SHOWN HEREON ARE THE PROPERTY OF THE AMPHENOL CORPORATION. NO RIGHTS OF REPRODUCTION ARE IMPLIED. ALL DIMENSIONS ARE SUBJECT TO NORMAL MANUFACTURING VARIATIONS.

Amphenol
Sine Systems - www.amphenol-sine.com
44724 Morley Drive
Clinton Township, MI 48036

ECOMATE® AQUARIUS™, RECEPTACLE, JAM NUT, SIZE 10, 4POS, SOCKET

SIZE	TYPE	DWG NO:	REVISION
B	C-	RTS710*D4S03	A1

SCALE: NONE SHEET 1 OF 1

TITLE: ECO-MATE, RECEPTACLE, JAM NUT, SIZE 10, 4POS, SOCKET.
DWG NO: RTS710*D4S03
REV: A1
SH: 1
OF: 1

Downloaded from Arrow.com.