© 2022 TE Connectivity. All Rights Reserved.

REVISIONS					
P	LTR	DESCRIPTION	DATE	DWN	APVD
	C	REVISED PER ECN-22-154143	20MAY2022	DC	JA

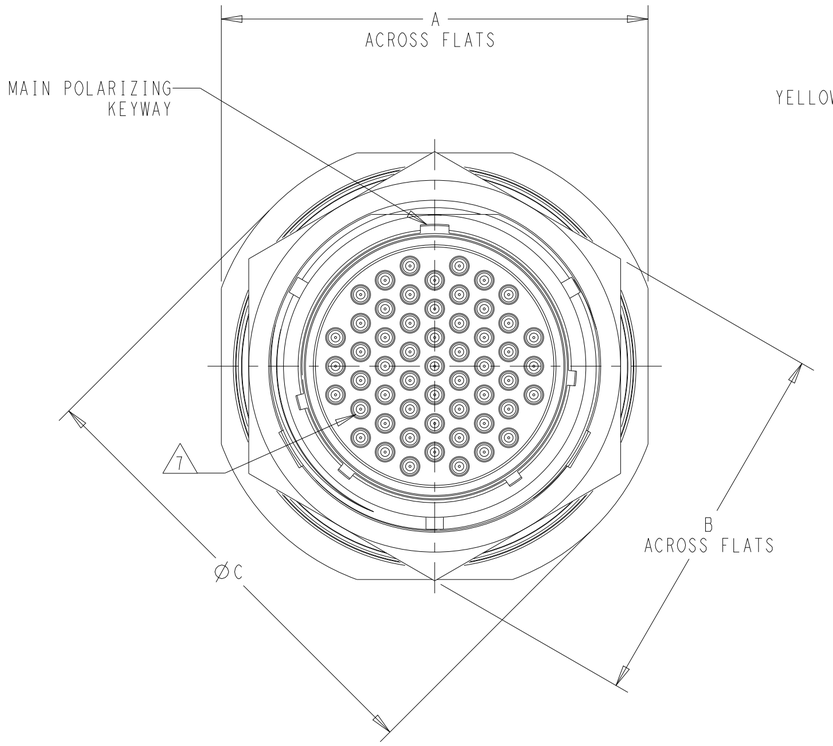

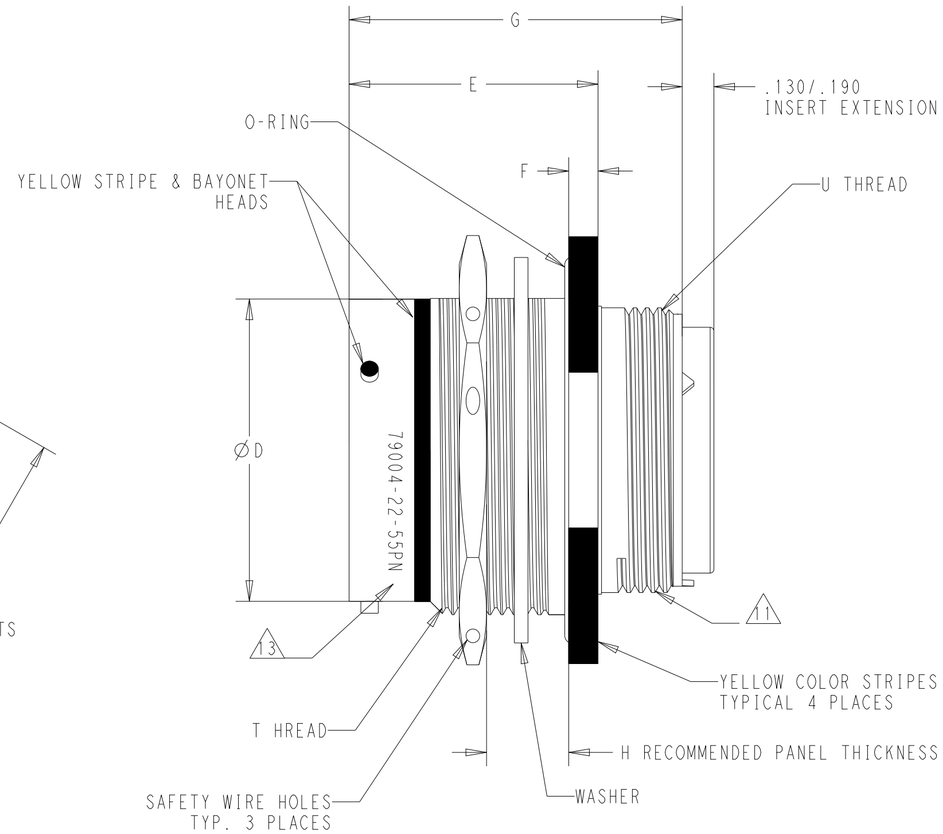

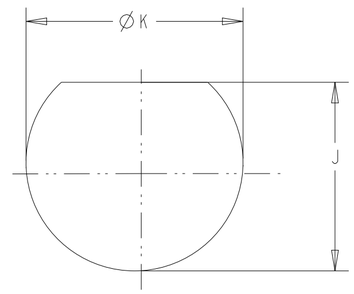

RECOMMENDED MOUNTING HOLE

SHELL SIZE	PART NO.	A±.015	B±.016	C MAX.	D±.003	E±.016	F±.010	G MAX.	H MIN	H MAX	J±.005	K±.005	T THREAD UNEF-2A	U THREAD UNEF-2A
8	79004-8-**P*	.939	.750	1.078	.471	1.068	.105	1.444	.062	.375	.536	.572	.5625-24	.500-20
14	79004-14-**P*	1.375	1.187	1.516	.873	1.068	.105	1.444	.062	.375	.948	1.010	1.000-20	.875-20
16	79004-16-**P*	1.500	1.312	1.641	.998	1.068	.105	1.444	.062	.375	1.072	1.135	1.125-18	1.000-20
22	79004-22-**P*	1.938	1.687	2.078	1.373	1.130	.138	1.510	.062	.437	1.447	1.510	1.500-18	1.3125-18
24	79004-24-**P*	2.062	1.812	2.203	1.498	1.130	.138	1.510	.062	.437	1.572	1.635	1.625-18	1.4375-18

1. ALL DIMENSIONS ARE SHOWN IN INCHES UNLESS OTHERWISE SPECIFIED.

2. CONTACT IDENTIFICATION IS IN CONTRASTING COLOR TO INSERTS.

3. MATERIAL: SHELL - STAINLESS STEEL
REAR RELEASE SOCKET CONTACTS - COPPER ALLOY
PIN CONTACTS - HIGH NICKEL - IRON ALLOY
INSERTS - COMPRESSION GLASS, PLASTIC, SILICONE & FLUOROSILICONE
O-RING - FUEL RESISTANT ELASTOMER
WASHER - STAINLESS STEEL

4. FINISH: SHELL & JAM NUT - PASSIVATED
CONTACTS - GOLD OVER NICKEL PLATING PER MIL-G-45204 TYPE II, GRADE C.
WASHER - PASSIVATED

5. NOTE : SOCKET CONTACT WIRE STRIP LENGTH MUST COMPLY TO DEUSTCH ENVELOPE DRAWING 1625+0000.

6. THIS CONNECTOR MATES WITH APPLIABLE DEUTSCH MIL-C-26482 SERIES 2 PLUGS.

7. 22-55 INSERT ARRANGEMENT SHOWN FOR REFERENCE ONLY.

8. THIS CONNECTOR IS SHIPPED LESS SOCKET CONTACTS INSERTION/REMOVAL TOOLS AND SEALING PLUGS UNLESS OTHERWISE SPECIFIED. SOCKET CONTACTS PER M39029/22-192 INSERTION/REMOVAL TOOLS PER M81969/14-10. SEALING PLUGS PER MS 27488.

9. 79004 -** -**-P-*
- INSERT CLOCKING POSITIONS
- PIN CONTACTS
- INSERT ARRANGEMENT
- SHELL SIZE
- BASIC IDENTIFER

10. CONSULT FACTORY FOR CONNECTOR AVAILIBILITY.

NOTE(S):

11. REAR SHELL THREAD TO BE TESTED TO 100 INCH POUNDS MINIMUM TORQUE.
ALL SIZES OF EACH LOT WILL BE 100% TESTED.

12. THIS CONNECTOR CONFORMS TO SIMMONDS SPECIFICATION 042285.

13. SIMMONDS PART NUMBER & DATE CODE TO BE INK STAMPED AS WELL AS DEUTSCH & DEUTSCH PART NUMBER LOCATED APPROXIMATELY AS SHOWN.

14. FLOUROSILICONE MATERIAL USED ON REAR GROMMET AND INTERFACIAL SEAL FOR COMPATABILITY WITH JET FUEL.

MC: 72 | FINISH: 4

DESCRIPTION:
RECEPTACLE
HERMETIC JAM NUT MOUNTING
BAYONET COUPLING
WITH REAR RELEASE SOCKET CONTACTS
& SPECIAL GROMMET WIRE SEALS.
ENTRE CONN. SUBMERGED IN FUEL ENVELOPE

CP | CAGE CODE 11139

FOR BEST WORKMANSHIP PRACTICES, REFERENCE TE SPEC 101-32119

PART SHALL COMPLY WITH TE WORKMANSHIP 101-32106

THIS DRAWING IS A CONTROLLED DOCUMENT.

DIMENSIONS: in

TOLERANCES UNLESS OTHERWISE SPECIFIED:
0 PLC ±-
1 PLC ±.1
2 PLC ±.02
3 PLC ±.005
4 PLC ±.0005
ANGLES ±.5°

MATERIAL 3

FINISH 4

DWN 20MAY2022 DAVID CALVARIO
CHK 20MAY2022 JOSE APODACA
APVD 20MAY2022 JOSE APODACA
PRODUCT SPEC -
APPLICATION SPEC -
WEIGHT -

TE Connectivity

NAME RECEPTACLE HERMETIC JAM NUT MOUTING

SIZE	CAGE CODE	DRAWING NO	RESTRICTED TO
A2	00779	C-79004-xx-xxPx	-

CUSTOMER DRAWING | SCALE 1:1 | SHEET 1 OF 1 | REV C

1471-9 (3/13)

Downloaded from Arrow.com.