APS11205

High-Temperature Hall-Effect Switch for Low Voltage Applications

FEATURES AND BENEFITS

- Optimized for applications with regulated power rails
  - Operation from 2.8 to 5.5 V
- AEC-Q100 automotive qualified
- Operation up to 175°C junction temperature
- Dynamic offset cancellation
  - Resistant to physical stress
  - Superior temperature stability
- Unipolar switch points
- Output short-circuit protection
- Solid-state reliability
- Industry-standard packages and pinouts

PACKAGES:

Not to scale

3-pin SOT23W (suffix LH)

3-pin SIP (suffix UA)

DESCRIPTION

The APS11205 Hall-effect sensor IC is an extremely temperature-stable and stress-resistant device, especially suited for operation over extended junction temperature ranges up to 175°C. Superior high-temperature performance is made possible through dynamic offset cancellation, which reduces the residual offset voltage normally caused by device overmolding, temperature dependencies, and thermal stress.

The single silicon chip includes: a Hall plate, small signal amplifier, chopper stabilization, Schmitt trigger, and a short-circuit-protected open-drain output. A south pole of sufficient strength turns the output on. Removal of the magnetic field turns the output off. For applications requiring operation from greater than 5.5 V, or operation directly from a battery, refer to the A1120.

Two package styles provide a choice of through-hole or surface mounting. Package type LH is a modified SOT23W, surface-mount package, while UA is a three-lead ultra-mini SIP for through-hole mounting. Both packages are lead (Pb) free and RoHs compliant with 100% matte-tin leadframe plating.

Functional Block Diagram

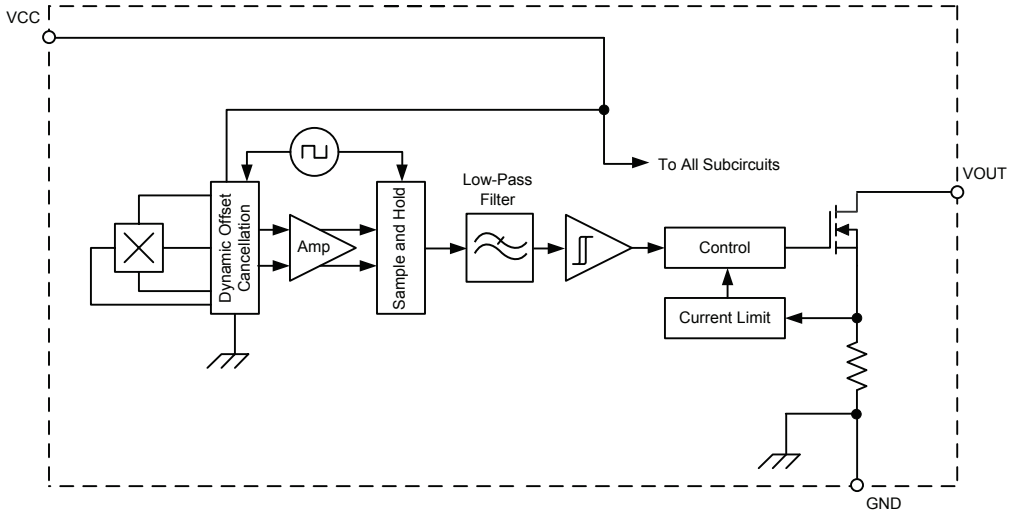

Downloaded from Arrow.com.

SELECTION GUIDE

Part Number	Packing [1]	Mounting	Branding	Ambient, T_A	Switch Points (Typ.)	
					B_{OP}	B_{RP}
APS11205ELHALX	13-in. reel, 10000 pieces/reel	3-pin SOT23W surface mount	A23	–40°C to 85°C	35 G	25 G
APS11205ELHALT [2]	7-in. reel, 3000 pieces/reel	3-pin SOT23W surface mount	A23			
APS11205EUAA	Bulk, 500 pieces/bag	3-pin SIP through hole	A24			
APS11205LLHALX	13-in. reel, 10000 pieces/reel	3-pin SOT23W surface mount	A23	–40°C to 150°C		
APS11205LLHALT [2]	7-in. reel, 3000 pieces/reel	3-pin SOT23W surface mount	A23			

[1] Contact Allegro for additional packing options.
[2] Available through authorized Allegro distributors only.

ABSOLUTE MAXIMUM RATINGS

Characteristic	Symbol	Notes	Rating	Units
Forward Supply Voltage	V_{CC}		6	V
Reverse Supply Voltage	V_{RCC}		–0.3	V
Output Off Voltage	V_{OUT}		6	V
Output Current [3]	I_{OUT}		60	mA
Maximum Junction Temperature	T_J(max)		165	°C
		For 500 hours	175	°C
Storage Temperature	T_{stg}		–65 to 170	°C

[3] Through short-circuit current limiting device.

PINOUT DIAGRAMS AND TERMINAL LIST

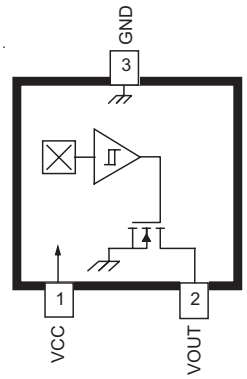

3-pin SOT23W
(suffix LH)

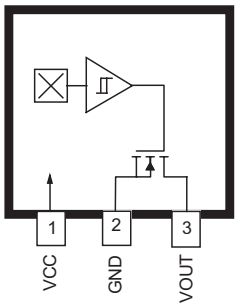

3-pin SIP
(suffix UA)

Terminal List

Name	Description	Number	
		LH	UA
VCC	Connects power supply to chip	1	1
VOUT	Output from circuit	2	3
GND	Ground	3	2

Allegro MicroSystems
955 Perimeter Road
Manchester, NH 03103-3353 U.S.A.
www.allegromicro.com

Downloaded from Arrow.com.

ELECTRICAL CHARACTERISTICS: Valid over full operating voltage and ambient temperature ranges, unless otherwise noted

Characteristics	Symbol	Test Conditions	Min.	Typ.[1]	Max.	Unit[2]
ELECTRICAL CHARACTERISTICS						
Forward Supply Voltage	V_{CC}	Operating, T_J < 175°C	2.8	–	5.5	V
Supply Current	I_{CC}	V_{CC} = 5.5 V	–	2	4	mA
Output Leakage Current	I_{OUTOFF}	V_{OUT} = 5.5 V, B < B_{RP}	–	–	10	µA
Output Saturation Voltage	$V_{OUT(SAT)}$	I_{OUT} = 5 mA, B > B_{OP}	–	50	500	mV
Output Current	I_{OUT}	Recommended value used during characterization	–	5	–	mA
Output Short-Circuit Current Limit	I_{OM}	B > B_{OP}	30	–	60	mA
Power-On Time[3]	t_{ON}	V_{CC} ≥ 2.8 V, B < B_{RP}(min) – 10 G, B > B_{OP}(max) + 10 G	–	–	25	µs
Power-On State, Output[3]	POS	V_{CC} ≥ V_{CC}(min), t < t_{ON}		Low		–
Chopping Frequency	f_C		–	800	–	kHz
Output Rise Time[3][4]	t_r	R_L = 1 kΩ, C_L = 20 pF	–	0.2	2	µs
Output Fall Time[3][4]	t_f	R_L = 1 kΩ, C_L = 20 pF	–	0.1	2	µs
MAGNETIC CHARACTERISTICS						
Operate Point	B_{OP}		–	35	50	G
Release Point	B_{RP}		5	25	–	G
Hysteresis	B_{HYS}	(B_{OP} – B_{RP})	–	10	–	G

[1] Typical data are are at T_A = 25°C and V_{CC} = 5 V, and are for initial design estimations only.
[2] 1 G (gauss) = 0.1 mT (millitesla).
[3] Guaranteed by device design and characterization.
[4] C_L = oscilloscope probe capacitance.

Allegro MicroSystems
955 Perimeter Road
Manchester, NH 03103-3353 U.S.A.
www.allegromicro.com

Downloaded from Arrow.com.

THERMAL CHARACTERISTICS: May require derating at maximum conditions; see application information

Characteristic	Symbol	Test Conditions	Value	Units
Package Thermal Resistance	$R_{\theta JA}$	Package LH, 1-layer PCB with copper limited to solder pads	228	°C/W
		Package LH, 2-layer PCB with 0.463 in.^{2} of copper area each side connected by thermal vias	110	°C/W
		Package UA, 1-layer PCB with copper limited to solder pads	165	°C/W

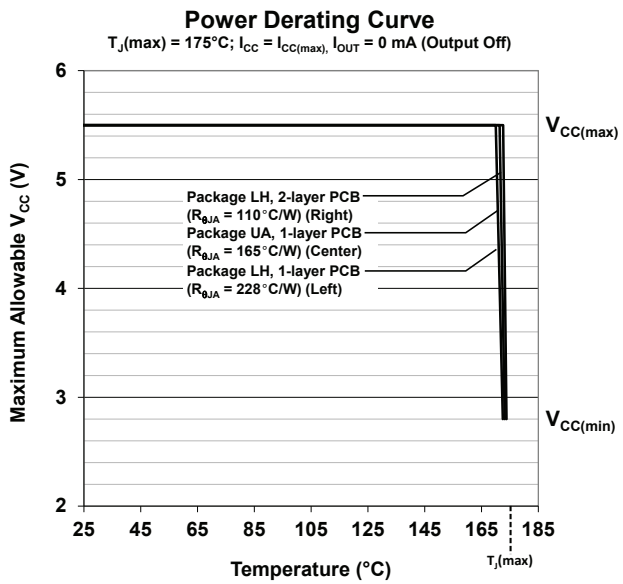

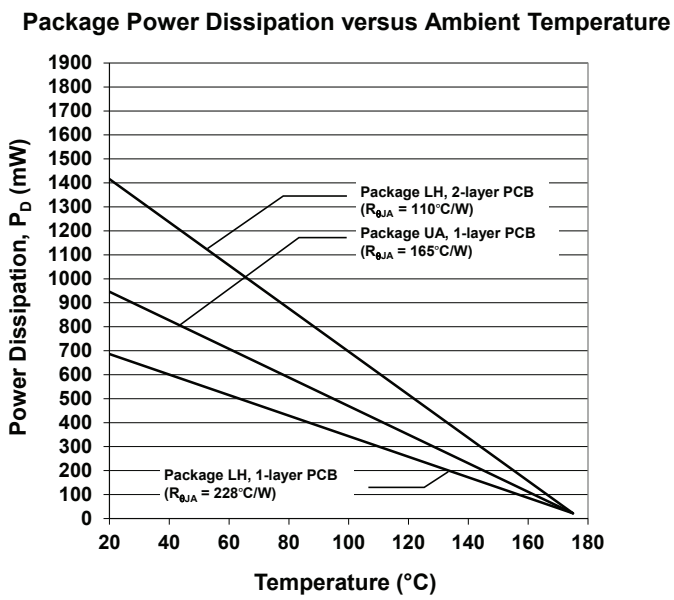

Allegro MicroSystems
955 Perimeter Road
Manchester, NH 03103-3353 U.S.A.
www.allegromicro.com

Downloaded from Arrow.com.

CHARACTERISTIC PERFORMANCE DATA

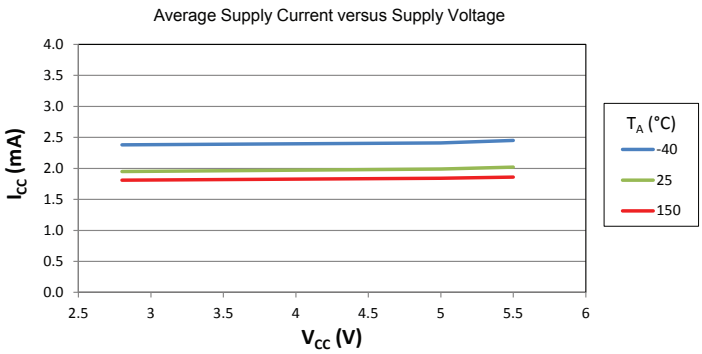

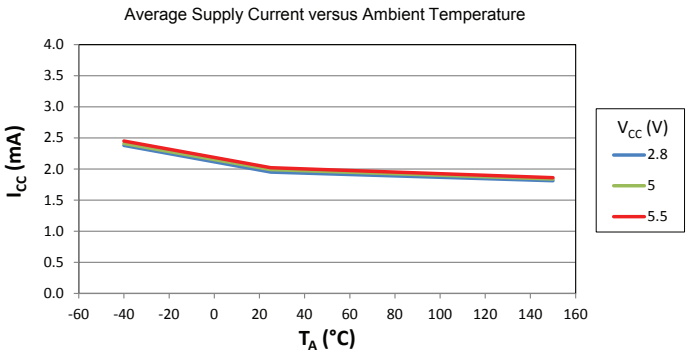

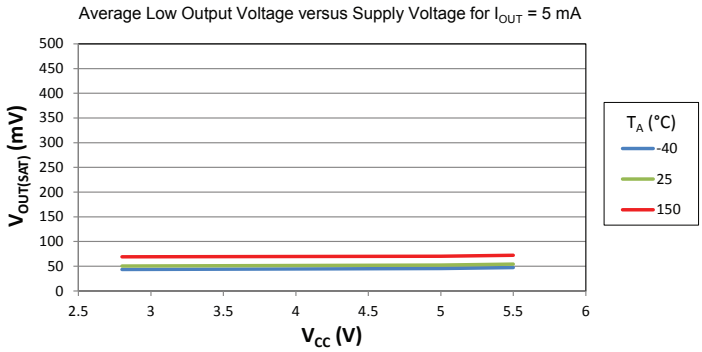

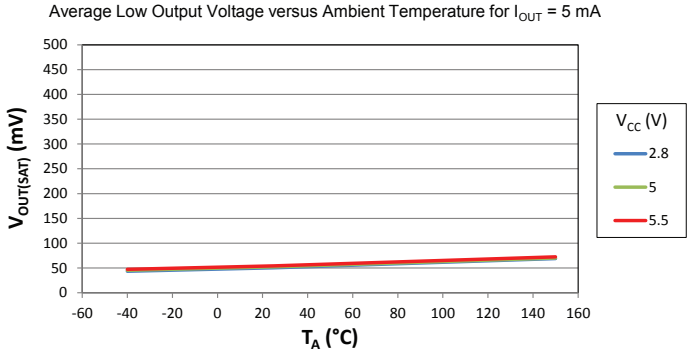

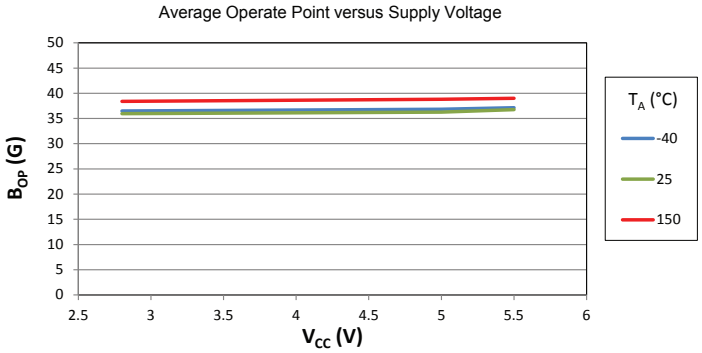

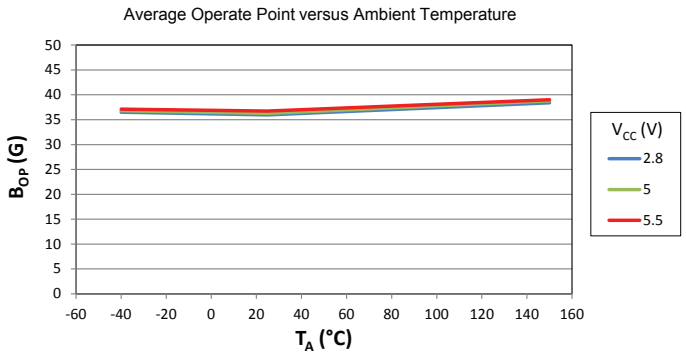

Allegro MicroSystems
955 Perimeter Road
Manchester, NH 03103-3353 U.S.A.
www.allegromicro.com

Downloaded from Arrow.com.

CHARACTERISTIC PERFORMANCE DATA (continued)

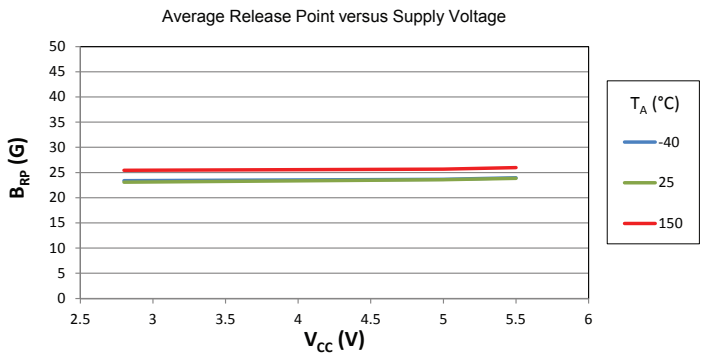

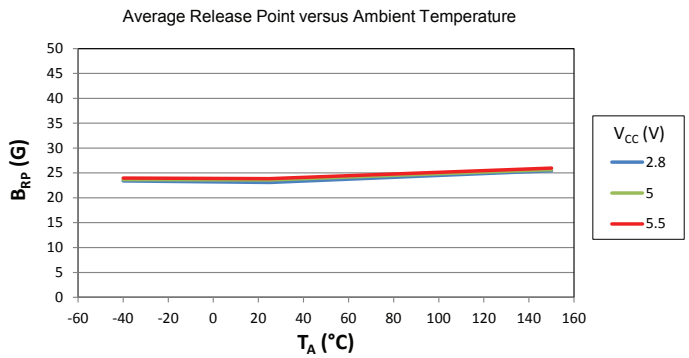

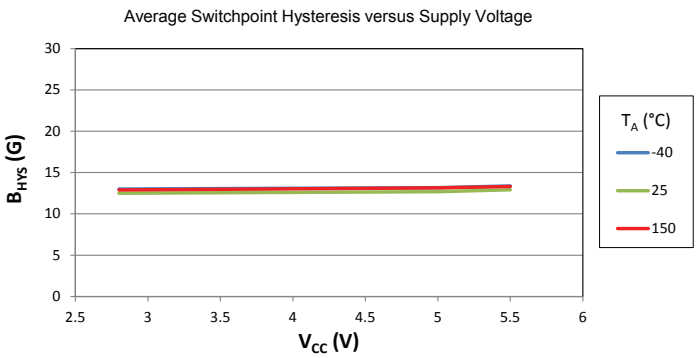

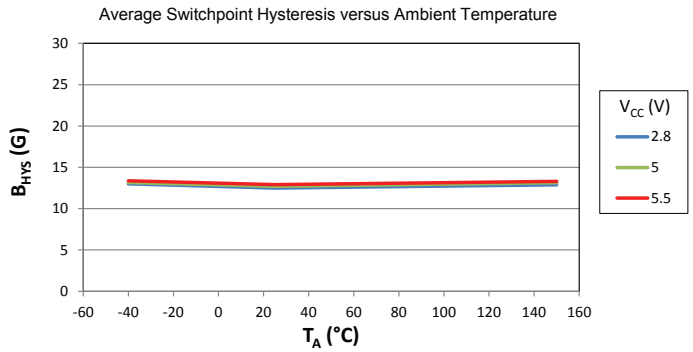

Allegro MicroSystems
955 Perimeter Road
Manchester, NH 03103-3353 U.S.A.
www.allegromicro.com

Downloaded from Arrow.com.

FUNCTIONAL DESCRIPTION

OPERATION

The output of the APS11205 switches low (turns on) when a south-polarity magnetic field perpendicular to the Hall element exceeds the operate point threshold, B_{OP} (see Figure 1). After turn-on, the output transistor is capable of continuously sinking up to 30 mA. When the magnetic field is reduced below the release point, B_{RP}, the device output goes high (turns off).

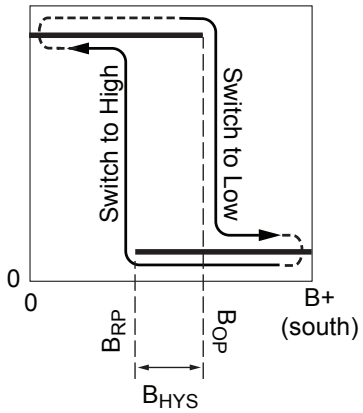

Figure 1: Device Switching Behavior

On the horizontal axis, the B+ direction indicates increasing south polarity magnetic field strength.

The difference in the magnetic operate and release points is the hysteresis, B_{HYS}, of the device. This built-in hysteresis allows clean switching of the output even in the presence of external mechanical vibration and electrical noise.

POWER-ON BEHAVIOR

Device power-on occurs once t_{ON} has elapsed. During the time prior to t_{ON}, and after $V_{CC} \geq V_{CC}(min)$, the output state is $V_{OUT(SAT)}$. After t_{ON} has elapsed, the output will correspond with the applied magnetic field for $B > B_{OP}$ or $B < B_{RP}$. See Figure 2 for an example.

Powering-on the device in the hysteresis range (less than B_{OP} and higher than B_{RP}) will give an output state of $V_{OUT(OFF)}$. The correct state is attained after the first excursion beyond B_{OP} or B_{RP}.

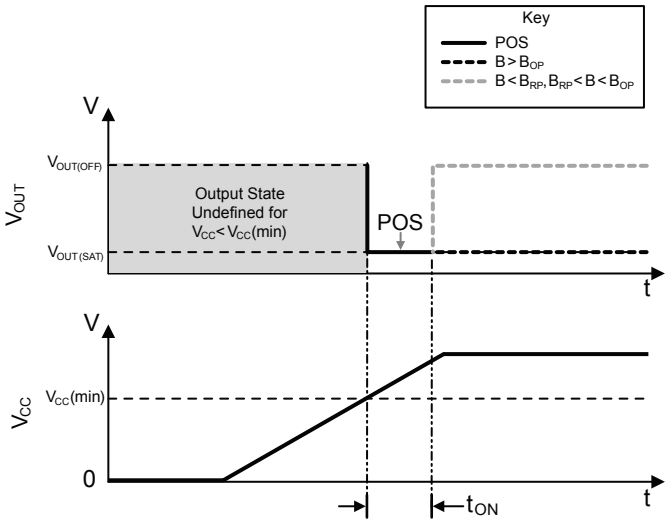

Figure 2: Power-On Sequence and Timing

Allegro MicroSystems
955 Perimeter Road
Manchester, NH 03103-3353 U.S.A.
www.allegromicro.com

Downloaded from Arrow.com.

Applications

It is strongly recommended that an external bypass capacitor be connected (in close proximity to the Hall element) between the supply and ground of the device to guarantee correct performance under harsh environmental conditions and to reduce noise from internal circuitry. As is shown in Figure 3, a 0.1 µF capacitor is typical.

Extensive applications information for Hall-effect devices is available in:

- *Hall-Effect IC Applications Guide, AN27701,*
- *Hall-Effect Devices: Guidelines for Designing Subassemblies Using Hall-Effect Devices AN27703.1*
- *Soldering Methods for Allegro's Products – SMD and Through-Hole, AN26009*

All are provided on the Allegro website:

www.allegromicro.com

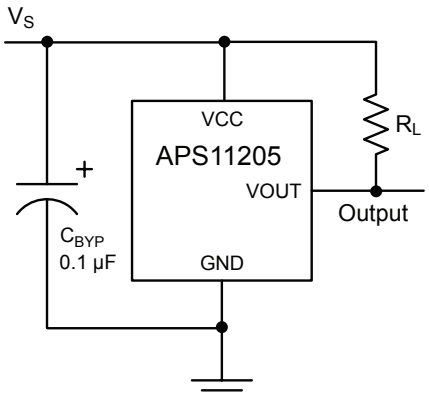

Figure 3: Typical Application Circuit

Allegro MicroSystems
955 Perimeter Road
Manchester, NH 03103-3353 U.S.A.
www.allegromicro.com

Downloaded from Arrow.com.

CHOPPER STABILIZATION

A limiting factor for switch point accuracy when using Hall-effect technology is the small-signal voltage developed across the Hall plate. This voltage is proportionally small relative to the offset that can be produced at the output of the Hall sensor. This makes it difficult to process the signal and maintain an accurate, reliable output over the specified temperature and voltage range. Chopper stabilization is a proven approach used to minimize Hall offset.

The Allegro technique, dynamic quadrature offset cancellation, removes key sources of the output drift induced by temperature and package stress. This offset reduction technique is based on a signal modulation-demodulation process. Figure 4: Model of Chopper Stabilization Circuit (Dynamic Offset Cancellation) illustrates how it is implemented.

The undesired offset signal is separated from the magnetically induced signal in the frequency domain through modulation. The subsequent demodulation acts as a modulation process for the offset causing the magnetically induced signal to recover its original spectrum at baseband while the DC offset becomes a high-frequency signal. Then, using a low-pass filter, the signal passes while the modulated DC offset is suppressed. Allegro's innovative chopper stabilization technique uses a high-frequency clock. The high-frequency operation allows a greater sampling rate that produces higher accuracy, reduced jitter, and faster signal processing. Additionally, filtering is more effective and results in a lower noise analog signal at the sensor output. Devices such as the APS11205 that use this approach have an extremely stable quiescent Hall output voltage, are immune to thermal stress, and have precise recoverability after temperature cycling. This technique is made possible through the use of a BiCMOS process which allows the use of low-offset and low-noise amplifiers in combination with high-density logic and sample-and-hold circuits

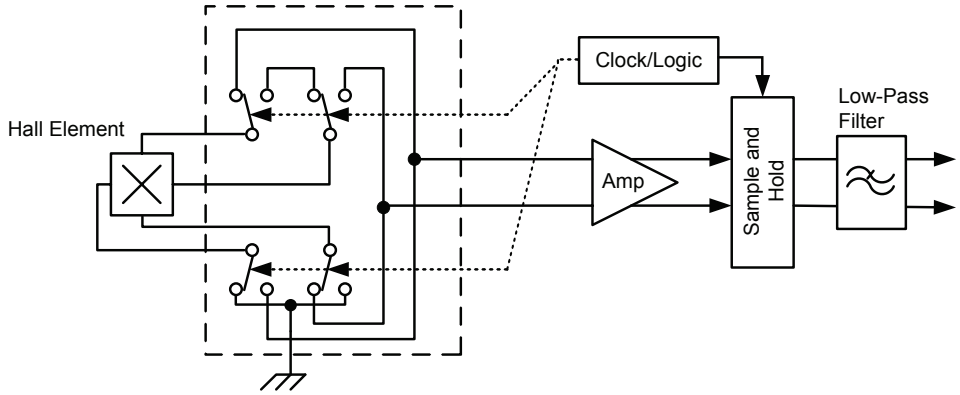

Figure 4: Model of Chopper Stabilization Circuit (Dynamic Offset Cancellation)

Allegro MicroSystems
955 Perimeter Road
Manchester, NH 03103-3353 U.S.A.
www.allegromicro.com

Downloaded from Arrow.com.

POWER DERATING

The device must be operated below the maximum junction temperature of the device, T_J(max). Under certain combinations of peak conditions, reliable operation may require derating supplied power or improving the heat dissipation properties of the application. This section presents a procedure for correlating factors affecting operating T_J. (Thermal data is also available on the Allegro MicroSystems website.)

The Package Thermal Resistance, $R_{\theta JA}$, is a figure of merit summarizing the ability of the application and the device to dissipate heat from the junction (die), through all paths to the ambient air. Its primary component is the Effective Thermal Conductivity, K, of the printed circuit board, including adjacent devices and traces. Radiation from the die through the device case, $R_{\theta JC}$, is relatively small component of $R_{\theta JA}$. Ambient air temperature, T_A, and air motion are significant external factors, damped by overmolding.

The resulting power dissipation capability directly reflects upon the ability of the device to withstand extreme operating conditions. The junction temperature mission profile specified in the Absolute Maximum Ratings table designates a total operating life capability based on qualification for the most extreme conditions, where T_J may reach 175°C.

The silicon IC is heated internally when current is flowing into the VCC terminal. When the output is on, current sinking into the VOUT terminal generates additional heat. This may increase the junction temperature, T_J, above the surrounding ambient temperature. The APS11205 is permitted to operate up to T_J = 175°C. As mentioned above, an operating device will increase T_J according to equations 1, 2, and 3 below. This allows an estimation of the maximum ambient operating temperature.

$$P_D = V_{IN} \times I_{IN} \quad (1)$$

$$\Delta T = P_D \times R_{\theta JA} \quad (2)$$

$$T_J = T_A + \Delta T \quad (3)$$

For example, given common conditions such as: T_A= 25°C, V_{CC} = 5 V, I_{CC} = 2.5 mA, V_{OUT} = 185 mV, I_{OUT} = 2 mA (output on), and $R_{\theta JA}$ = 165°C/W, then:

$$P_D = (V_{CC} \times I_{CC}) + (V_{OUT} \times I_{OUT}) = (5\ V \times 2.5\ mA) + (185\ mV \times 2\ mA) = 12.5\ mW + 0.4\ mW = 12.9\ mW$$

$$\Delta T = P_D \times R_{\theta JA} = 12.9\ mW \times 165°C/W = 2.1°C$$

$$T_J = T_A + \Delta T = 25°C + 2.1°C = 27.1°C$$

A worst-case estimate, P_D(max), represents the maximum allowable power level (V_{CC}(max), I_{CC}(max)), without exceeding T_J(max), at a selected $R_{\theta JA}$.

For example, given the conditions $R_{\theta JA}$ = 228°C/W, T_J(max) = 175°C, V_{CC}(max) = 5.5 V, I_{CC}(max) = 4 mA, V_{OUT} = 500 mV, and I_{OUT} = 5 mA (output on), the maximum allowable operating ambient temperature can be determined.

The power dissipation required for the output is shown below:

$$P_D(V_{OUT}) = V_{OUT} \times I_{OUT} = 500\ mV \times 5\ mA = 2.5\ mW$$

The power dissipation required for the IC supply is shown below:

$$P_D(V_{CC}) = V_{CC} \times I_{CC} = 5.5\ V \times 4\ mA = 22\ mW$$

Next, by inverting using equation 2:

$$\Delta T = P_D \times R_{\theta JA} = [P_D(V_{OUT}) + P_D(V_{CC})] \times 228°C/W = (2.5\ mW + 22\ mW) \times 228°C/W = 24.5\ mW \times 228°C/W = 5.6°C$$

Finally, by inverting equation 3 with respect to voltage:

$$T_A(est) = T_J(max) - \Delta T = 175°C - 5.6°C = 169.4°C$$

In the above case there is only sufficient power dissipation capability to operate up to T_A(est). This particular result indicates that, at T_J(max), the application and device can only dissipate adequate amounts of heat at ambient temperatures ≤ T_A(est).

Allegro MicroSystems
955 Perimeter Road
Manchester, NH 03103-3353 U.S.A.
www.allegromicro.com

Downloaded from Arrow.com.

Package LH, 3-Pin (SOT-23W)

For Reference Only – Not for Tooling Use

(Reference Allegro DWG-0000628, Rev. 1)
NOT TO SCALE
Dimensions in millimeters
Dimensions exclusive of mold flash, gate burrs, and dambar protrusions
Exact case and lead configuration at supplier discretion within limits shown

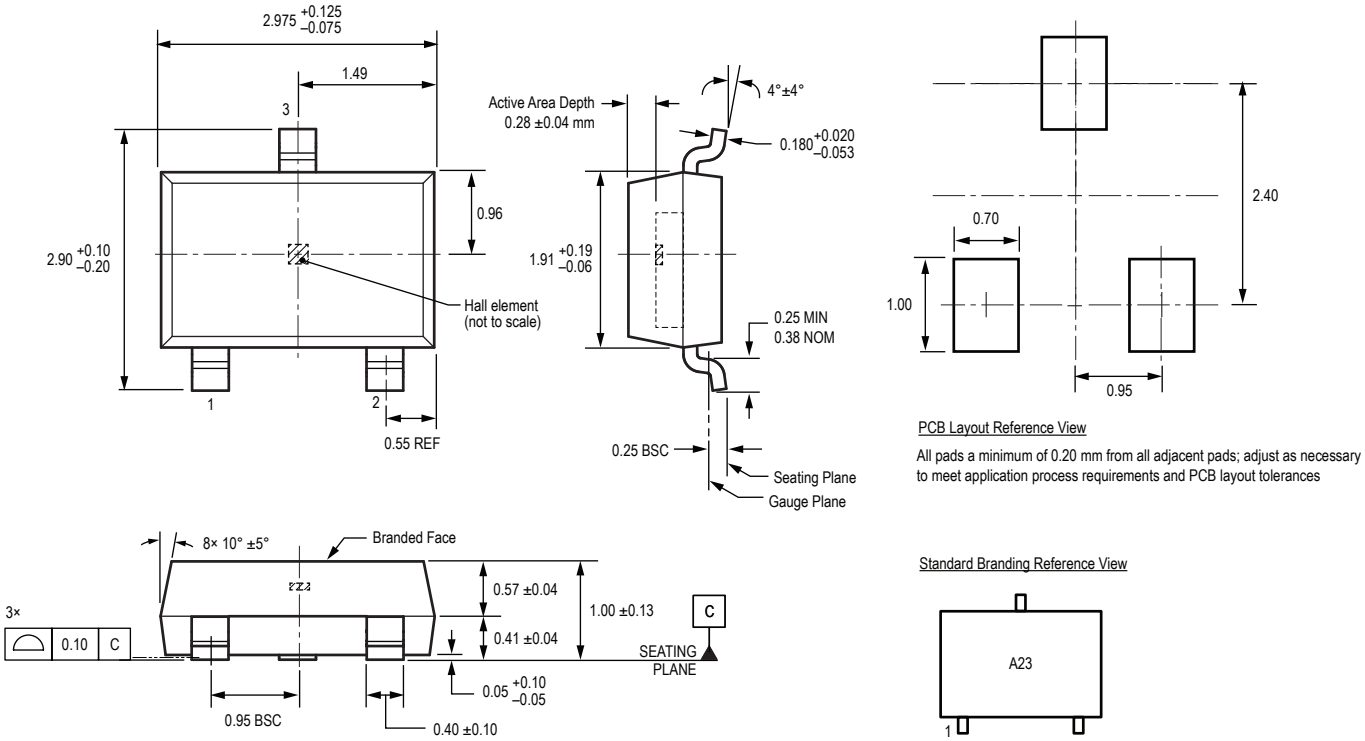

Allegro MicroSystems
955 Perimeter Road
Manchester, NH 03103-3353 U.S.A.
www.allegromicro.com

Downloaded from Arrow.com.

Package UA, 3-Pin SIP

For Reference Only – Not For Tooling Use

(Reference DWG-0000404, Rev. 1)
NOT TO SCALE
Dimensions in millimeters
Exact case and lead configuration at supplier discretion within limits shown

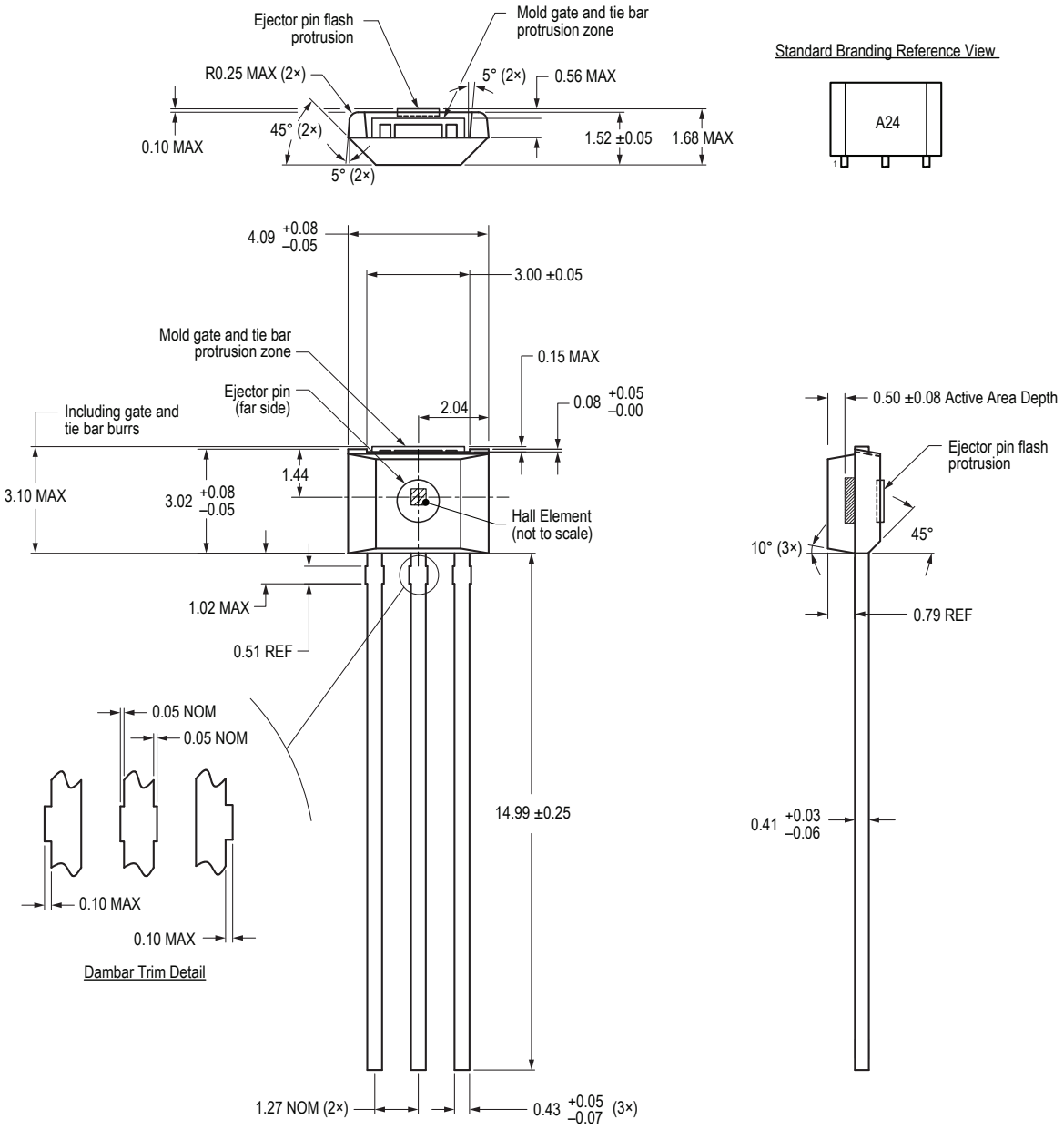

Allegro MicroSystems
955 Perimeter Road
Manchester, NH 03103-3353 U.S.A.
www.allegromicro.com

Downloaded from Arrow.com.

Revision History

Number	Date	Description
–	July 29, 2016	Initial release
1	September 27, 2016	Updated Title (all pages), Electrical Characteristics (page 3), and Functional Description (page 7)
2	February 2, 2017	Added E temperature rated variant to product offerings
3	February 20, 2020	Minor editorial updates
4	February 17, 2022	Updated package drawings (pages 11-12)
5	February 24, 2026	Removed APS11205LUAA from the selection guide (page 2)

Copyright 2026, Allegro MicroSystems.

Allegro MicroSystems reserves the right to make, from time to time, such departures from the detail specifications as may be required to permit improvements in the performance, reliability, or manufacturability of its products. Before placing an order, the user is cautioned to verify that the information being relied upon is current.

Allegro's products are not to be used in any devices or systems, including but not limited to life support devices or systems, in which a failure of Allegro's product can reasonably be expected to cause bodily harm.

The information included herein is believed to be accurate and reliable. However, Allegro MicroSystems assumes no responsibility for its use; nor for any infringement of patents or other rights of third parties which may result from its use.

Copies of this document are considered uncontrolled documents.

For the latest version of this document, visit our website:
www.allegromicro.com

Allegro MicroSystems
955 Perimeter Road
Manchester, NH 03103-3353 U.S.A.
www.allegromicro.com

Downloaded from Arrow.com.