ANGLE 1

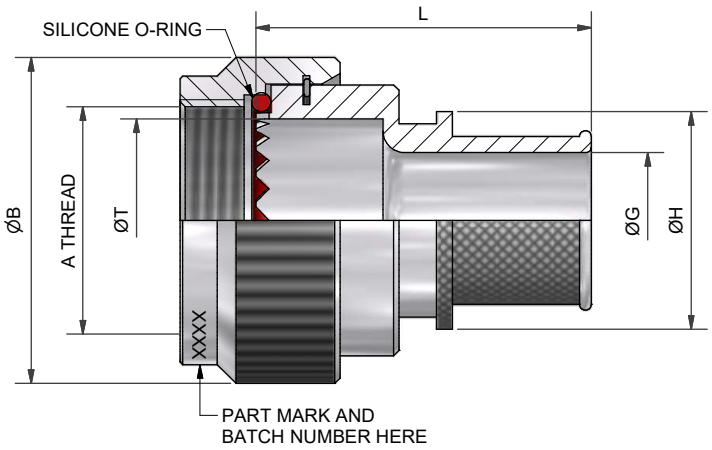

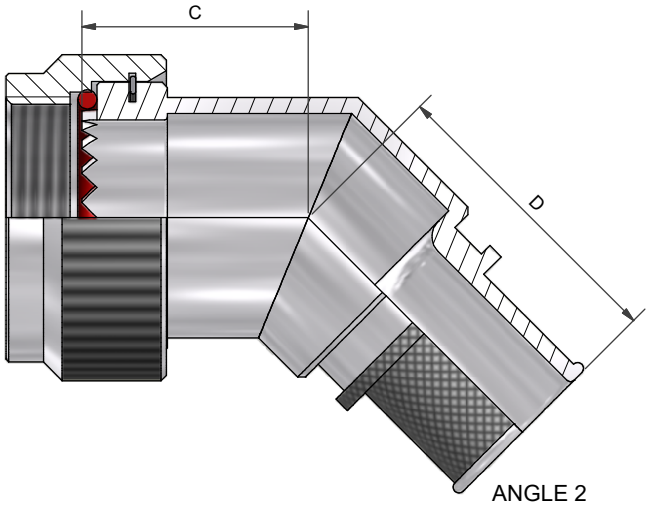

ANGLE 2

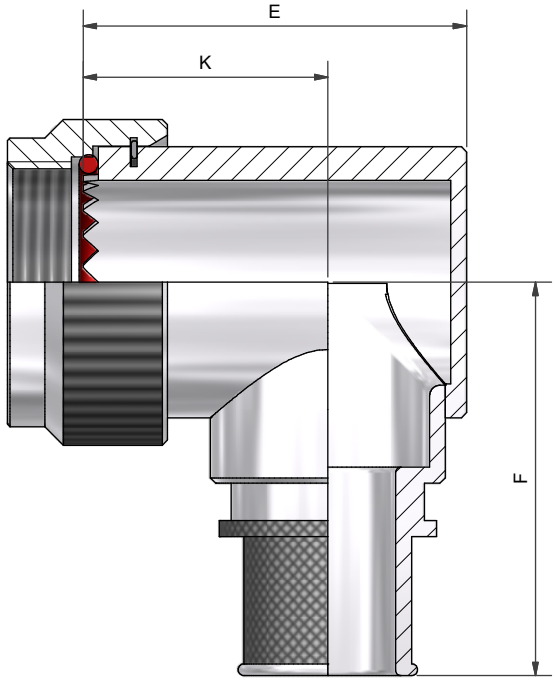

ANGLE 3

DRAWN	J.CLARK	DATE 18/04/2016	3RD ANGLE PROJECTION NOT TO SCALE	PART NUMBER: BTLC SERIES	Polamco TE connectivity
SALES APPR		18/04/2016			
DESIGN APPR			UNLESS OTHERWISE SPECIFIED ALL DIMENSIONS IN MILLIMETRES GENERAL TOL LINEAR +/-0,25MM ANGULAR +/- 1°	TITLE: BAND TERMINATION BACKSHELL	
PROD APPR					
QUAL APPR			MATERIAL SEE PART NUMBER BREAKDOWN	ASSY USED ON: MIL-DTL-5015	
ISSUE 3	REV.	DCR 6224	FINISH SEE PART NUMBER BREAKDOWN		
NCAGE CODE U5792	WEIGHT				

THIS DRAWING IS COPYRIGHT AND THE PROPERTY OF POLAMCO LTD IT MUST NOT BE COPIED, USED FOR MANUFACTURE OR OTHERWISE DISCLOSED WITHOUT PRIOR WRITTEN CONSENT OF THE COMPANY.

POLAMCO LTD, WESTON LOCK, LOWER BRISTOL ROAD BATH BA2 1EP

SHT 1

DRAWING NO: P11328

Downloaded from Arrow.com.

TABLE 1

SHELL SIZE	A THREAD	ØB MAX	ØT MIN	C ±0,5	D MAX	E MAX	F MAX	K ±0,5	L MAX
10SL	9/16 - 24UNEF	21,0	11,4	19,8	26,9	27,2	32,7	17,9	31,9
12/12S	5/8 -24UNEF	23,0	12,6	19,8	27,3	28,1	32,5	18,5	31,9
14/14S	3/4 - 20UNEF	26,0	15,1	20,8	28,2	33,2	35,5	20,9	31,9
16/16S	7/8 - 20UNEF	30,5	18,9	21,4	29,0	36,2	37,4	22,9	31,9
18	1 - 20UNEF	34,0	21,6	22,1	29,3	39,7	39,0	24,4	31,9
20	1 1/8 - 18UNEF	37,0	24,5	22,8	30,1	43,2	41,6	25,9	31,9
22	1 1/4 - 18UNEF	40,0	27,9	23,4	30,5	45,7	42,1	27,4	31,9
24	1 3/8 - 18UNEF	43,5	30,5	24,0	31,4	48,7	43,6	28,9	36,2
28	1 5/8 - 18UNEF	50,0	34,9	25,1	32,3	54,2	46,1	31,4	41,2
32	1 7/8- 16UN	56,0	41,4	30,0	33,2	60,3	48,6	34,1	41,2
36	2 1/8 -16UN	64,0	48,4	29,0	34,0	69,6	52,3	38,9	41,2
40	2 3/8 - 16UN	69,5	54,0	31,5	35,1	74,1	54,8	40,4	41,2

TABLE 2

ENTRY SIZE	ØG MIN	ØH MAX
03	4,7	13,9
04	6,3	13,9
05	7,9	15,5
06	9,5	17,2
07	11,1	18,7
08	12,7	20,3
09	14,2	21,9
10	15,8	23,5
11	17,4	25,1
12	19,0	26,7
13	20,6	28,3
14	22,2	29,9
15	23,8	31,5
16	25,4	33,1
17	27,0	34,7
18	28,6	36,3
19	30,2	37,9
20	31,8	39,5
21	33,3	41,1
22	35,0	42,7
23	36,5	44,3
24	38,1	45,9

TABLE 3

CODE	FINISH
C	ELECTROLESS NICKEL
B	CADMIUM OLIVE DRAB OVER ELECTROLESS NICKEL
ZB	ZINC COBALT OLIVE DRAB OVER ELECTROLESS NICKEL
ZN	ZINC NICKEL BLACK PASSIVATE OVER ELECTROLESS NICKEL

LIST NOT EXHAUSTIVE, FOR COMPREHENSIVE LIST AND SPECS, SEE WEBSITE

BTLC1-16-08-1-C

SERIES
CONNECTOR INTERFACE
ANGLE
SHELL SIZE (TABLE 1)
ENTRY SIZE (TABLE 2)
MATERIAL
ALUMINIUM ALLOY
FINISH (TABLE 3)

DRAWN	J.CLARK	DATE 18/04/2016	3RD ANGLE PROJECTION NOT TO SCALE	PART NUMBER: BTLC SERIES
SALES APPR		18/04/2016		
DESIGN APPR			UNLESS OTHERWISE SPECIFIED ALL DIMENSIONS IN MILLIMETRES GENERAL TOL LINEAR +/-0,25MM ANGULAR +/- 1°	TITLE: BAND TERMINATION BACKSHELL
PROD APPR				
QUAL APPR			MATERIAL SEE PART NUMBER BREAKDOWN FINISH SEE PART NUMBER BREAKDOWN	ASSY USED ON: MIL-DTL-5015
ISSUE 3	REV.	DCR 6224		
NCAGE CODE U5792		WEIGHT		

THIS DRAWING IS COPYRIGHT AND THE PROPERTY OF POLAMCO LTD IT MUST NOT BE COPIED, USED FOR MANUFACTURE OR OTHERWISE DISCLOSED WITHOUT PRIOR WRITTEN CONSENT OF THE COMPANY.

POLAMCO LTD, WESTON LOCK, LOWER BRISTOL ROAD BATH BA2 1EP

SHT 2

DRAWING NO: P11328

Downloaded from Arrow.com.