Overview

The TRS Thermal Reed Switch is a highly reliable, precise temperature-sensitive switch ideal for energy conservation. The screw mounting package of TRS-P makes it easy to set up in the application, by just screwing it in the device that needs temperature detection or overheat monitoring.

Its unique proprietary design features a magnet and a temperature-sensing soft ferromagnetic substance called Thermorite®. The material's magnetic flux density decreases as the temperature increases turning it into a paramagnetic substance at the Curie temperature.

These products have also been attested by the International Relay Association.

Applications

Typical applications include radiator water detection and overheat detection for industrial and agricultural engines.

Benefits

- High reliability for on/off operations
- High-speed response
- Long operational life
- Excellent environmental durability
- Extremely simple circuit design with the screw mounting
- Compact, light, and easy to handle
- Dust, explosion and corrosion-proof
- Wide range of operating temperatures available from 80°C to +120°C
- Excellent temperature accuracy of ±3°C
- RoHS/REACH compliant

TRS-P1 Type

TRS-P2 Type

Downloaded from Arrow.com.

Ordering Information

TRS	1-	80		M	PR	001
Series	Maximum Opening/Closing Power (W)	Operating Temperature (°C)		Contact Type	Shape Classification	Lead Type
TRS	1 = 10 W	80 = 80°C 85 = 85°C 90 = 90°C 95 = 95°C 100 = 100°C	105 = 105°C 110 = 110°C 115 = 115°C 120 = 120°C	B = Break M = Make	PR = P shape PT screw	001 = R1/8(PT1/8) 002 = R3/8(PT3/8)

Structures and Principles of Operation

Thermal Reed Switches (TRS) are temperature-sensing switches composed of a magnet and a temperature-sensing soft ferromagnetic substance called Thermorite. This material's saturation magnetic flux density decreases as the temperature increases, and it turns into a paramagnetic substance at its Curie temperature.

Thermorite properties

- Thermorite changes its magnetic property rapidly at its Curie temperature, providing quick response times.
- The Curie temperature of Thermorite does not vary with time, as it is based on a compounding ratio.
- Thermorite is stable against moisture and hazardous gas.

Thermal property of Thermorite

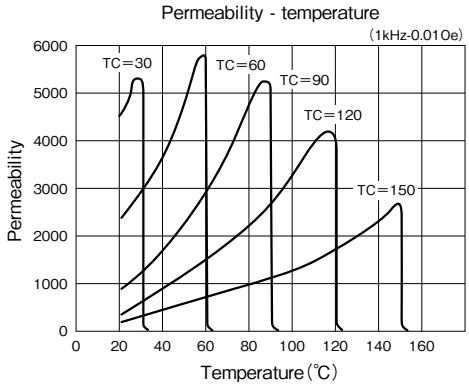

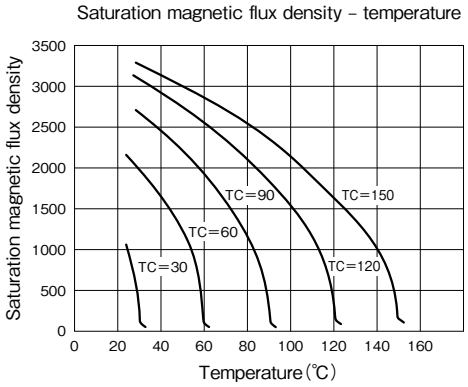

TC=Curie temperature

Downloaded from Arrow.com.

Structures and Principles of Operation cont.

Reed switch structure

- The reed switch is a contact switch comprised of a pair of Fe-Ni alloy reeds encased in a glass tube with inactive gas. The reeds are switched on or off by the magnetic field of a permanent magnet or magnet coil.
- The reeds in the glass tube become magnetized from the magnetic field, allowing the two reeds to make contact and connect (switch on). When the magnetic field disappears, the reeds separate and disconnect (switch off).
- The glass encasement of the reeds ensures high environmental resistance and a long operational life.

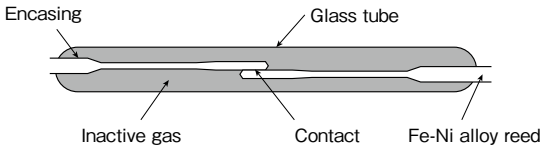

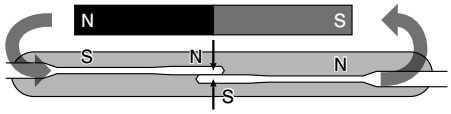

TRS principle: Break (B) type

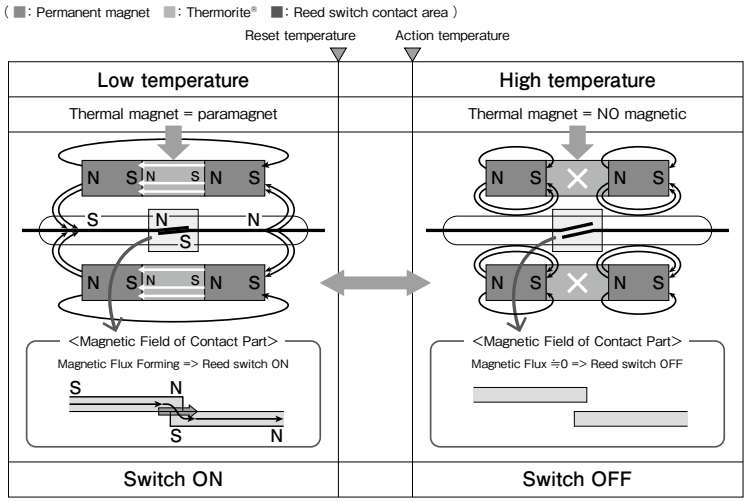

TRS principle: Make (M) type

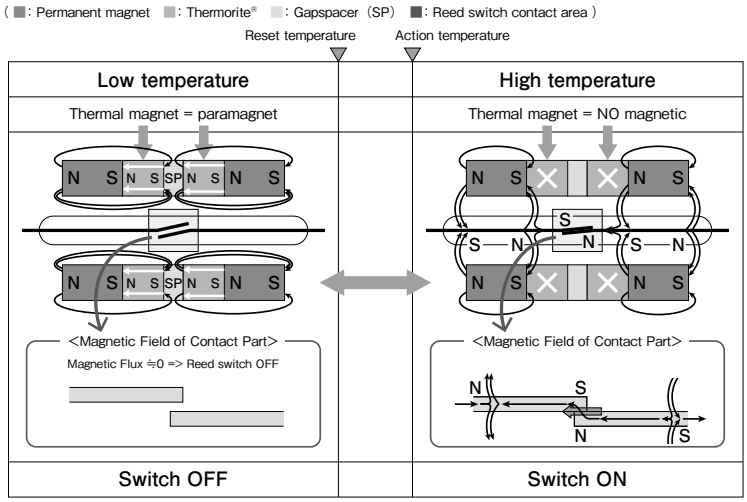

Downloaded from Arrow.com.

External Magnetic Field

TRS Installation in External Magnetic Field

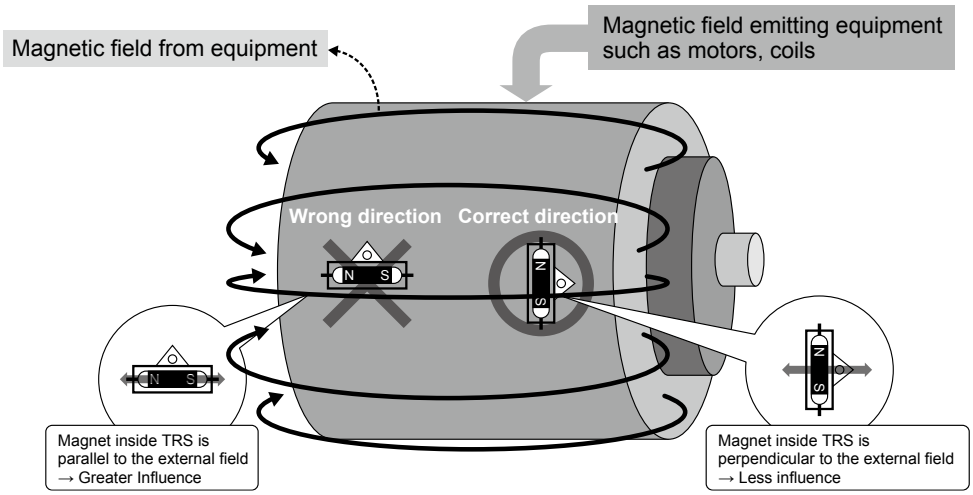

Ferromagnetic Material Influence

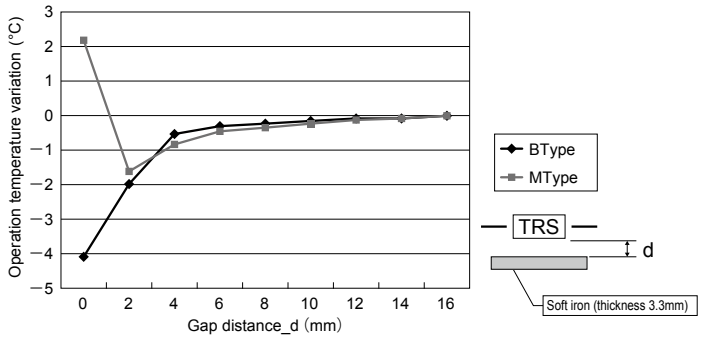

Downloaded from Arrow.com.

Dimensions – Millimeters

Part Type	Dimensions - Millimeters
TRS1-***BPR001	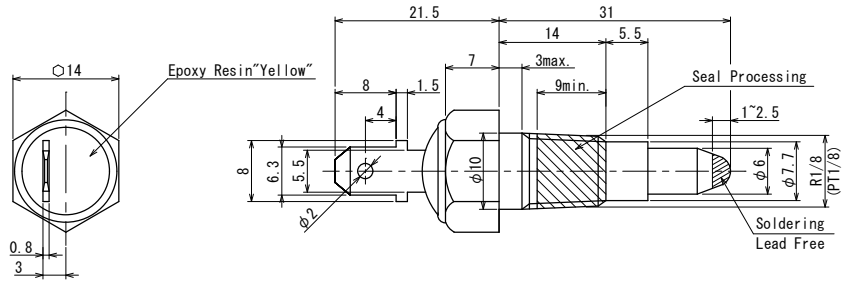
TRS1-***MPR001	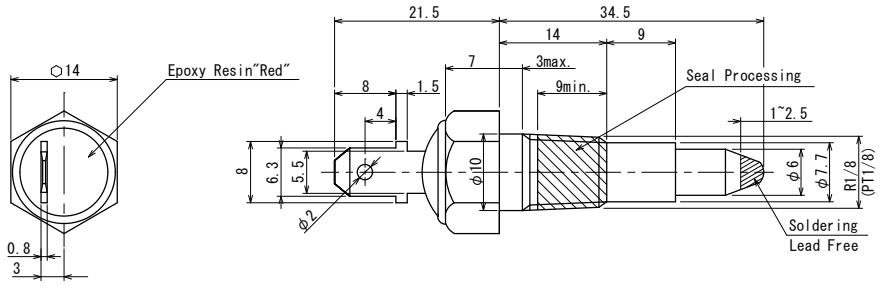
TRS1-***BPR002	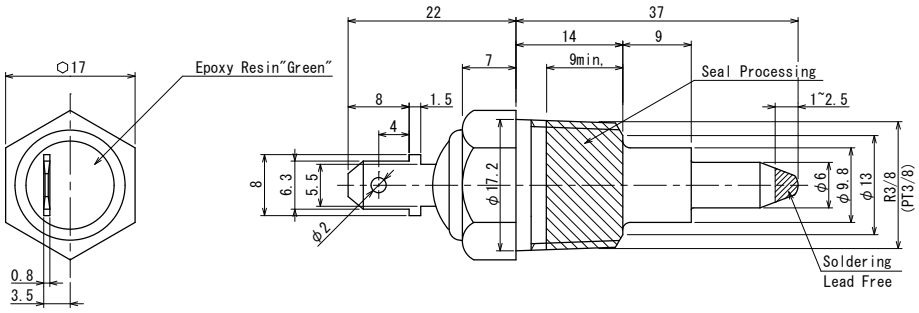
TRS1-***MPR002	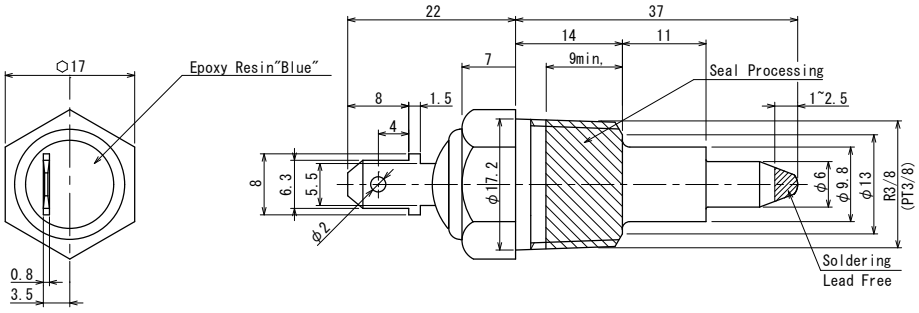

Downloaded from Arrow.com.

Environmental Compliance

All KEMET Thermal Sensors are RoHS compliant.

Performance Characteristics

Item	Performance Characteristics	
Operations	All types	100,000 times
Condition	All types	1) Power supply voltage: 13.5 VDC Connection load: lamp Drive: On = 1 second, Off = 29 seconds 2) 14 VDC – 28 Ω (purely resistive load)
Judgement	All types	1) No stick 2) Contact resistance be within 500 mΩ
Screw Torque Recommendation	TRS-P1 type	7.35 N•m maximum (75 kgf•cm maximum) Use a torque wrench or nut runner as a tightening tool
	TRS-P2 type	34.3 N•m maximum (350 kgf•cm maximum) Use a torque wrench or nut runner as a tightening tool

Insulation & Temperature Characteristics

Shape Type	Operating Temperature Range	Switching Temperature Range	Switching Temperature Precision[1]	Differential Temperature[2]
P shape PT screw	−20°C to +130°C	80°C to +120°C	±3.0°C	10°C Maximum

[1] Switching temperature precision does not include measurement error.
[2] The differential temperature is also referred to as the hysteresis temperature on thermal sensors.

Downloaded from Arrow.com.

Table 1 – Ratings & Part Number Reference

Part Number	Switching Temperature (°C)	Maximum Differential Temperature (°C)	Contact Type	Maximum Opening/ Closing Voltage (V)	Maximum Opening/ Closing Current[1] (A)	Maximum Opening/ Closing Power[1] (W)	Minimum Opening/ Closing Current	Maximum Contact Resistance (mΩ)	Weight (g)
TRS1-80BPR001	80°C ±3°C	10°C	Break	100 DC	0.500 DC	10.0 DC	5 mA/1 VDC	500	15.0
TRS1-85BPR001	85°C ±3°C	10°C	Break	100 DC	0.500 DC	10.0 DC	5 mA/1 VDC	500	15.0
TRS1-90BPR001	90°C ±3°C	10°C	Break	100 DC	0.500 DC	10.0 DC	5 mA/1 VDC	500	15.0
TRS1-95BPR001	95°C ±3°C	10°C	Break	100 DC	0.500 DC	10.0 DC	5 mA/1 VDC	500	15.0
TRS1-100BPR001	100°C ±3°C	10°C	Break	100 DC	0.500 DC	10.0 DC	5 mA/1 VDC	500	15.0
TRS1-105BPR001	105°C ±3°C	10°C	Break	100 DC	0.500 DC	10.0 DC	5 mA/1 VDC	500	15.0
TRS1-110BPR001	110°C ±3°C	10°C	Break	100 DC	0.500 DC	10.0 DC	5 mA/1 VDC	500	15.0
TRS1-115BPR001	115°C ±3°C	10°C	Break	100 DC	0.500 DC	10.0 DC	5 mA/1 VDC	500	15.0
TRS1-120BPR001	120°C ±3°C	10°C	Break	100 DC	0.500 DC	10.0 DC	5 mA/1 VDC	500	15.0
TRS1-80MPR001	80°C ±3°C	10°C	Make	100 DC	0.500 DC	10.0 DC	5 mA/1 VDC	500	16.2
TRS1-85MPR001	85°C ±3°C	10°C	Make	100 DC	0.500 DC	10.0 DC	5 mA/1 VDC	500	16.2
TRS1-90MPR001	90°C ±3°C	10°C	Make	100 DC	0.500 DC	10.0 DC	5 mA/1 VDC	500	16.2
TRS1-95MPR001	95°C ±3°C	10°C	Make	100 DC	0.500 DC	10.0 DC	5 mA/1 VDC	500	16.2
TRS1-100MPR001	100°C ±3°C	10°C	Make	100 DC	0.500 DC	10.0 DC	5 mA/1 VDC	500	16.2
TRS1-105MPR001	105°C ±3°C	10°C	Make	100 DC	0.500 DC	10.0 DC	5 mA/1 VDC	500	16.2
TRS1-110MPR001	110°C ±3°C	10°C	Make	100 DC	0.500 DC	10.0 DC	5 mA/1 VDC	500	16.2
TRS1-115MPR001	115°C ±3°C	10°C	Make	100 DC	0.500 DC	10.0 DC	5 mA/1 VDC	500	16.2
TRS1-120MPR001	120°C ±3°C	10°C	Make	100 DC	0.500 DC	10.0 DC	5 mA/1 VDC	500	16.2
TRS1-80BPR002	80°C ±3°C	10°C	Break	100 DC	0.500 DC	10.0 DC	5 mA/1 VDC	500	34.0
TRS1-85BPR002	85°C ±3°C	10°C	Break	100 DC	0.500 DC	10.0 DC	5 mA/1 VDC	500	34.0
TRS1-90BPR002	90°C ±3°C	10°C	Break	100 DC	0.500 DC	10.0 DC	5 mA/1 VDC	500	34.0
TRS1-95BPR002	95°C ±3°C	10°C	Break	100 DC	0.500 DC	10.0 DC	5 mA/1 VDC	500	34.0
TRS1-100BPR002	100°C ±3°C	10°C	Break	100 DC	0.500 DC	10.0 DC	5 mA/1 VDC	500	34.0
TRS1-105BPR002	105°C ±3°C	10°C	Break	100 DC	0.500 DC	10.0 DC	5 mA/1 VDC	500	34.0
TRS1-110BPR002	110°C ±3°C	10°C	Break	100 DC	0.500 DC	10.0 DC	5 mA/1 VDC	500	34.0
TRS1-115BPR002	115°C ±3°C	10°C	Break	100 DC	0.500 DC	10.0 DC	5 mA/1 VDC	500	34.0
TRS1-120BPR002	120°C ±3°C	10°C	Break	100 DC	0.500 DC	10.0 DC	5 mA/1 VDC	500	34.0
TRS1-80MPR002	80°C ±3°C	10°C	Make	100 DC	0.500 DC	10.0 DC	5 mA/1 VDC	500	35.0
TRS1-85MPR002	85°C ±3°C	10°C	Make	100 DC	0.500 DC	10.0 DC	5 mA/1 VDC	500	35.0
TRS1-90MPR002	90°C ±3°C	10°C	Make	100 DC	0.500 DC	10.0 DC	5 mA/1 VDC	500	35.0
TRS1-95MPR002	95°C ±3°C	10°C	Make	100 DC	0.500 DC	10.0 DC	5 mA/1 VDC	500	35.0
TRS1-100MPR002	100°C ±3°C	10°C	Make	100 DC	0.500 DC	10.0 DC	5 mA/1 VDC	500	35.0
TRS1-105MPR002	105°C ±3°C	10°C	Make	100 DC	0.500 DC	10.0 DC	5 mA/1 VDC	500	35.0
TRS1-110MPR002	110°C ±3°C	10°C	Make	100 DC	0.500 DC	10.0 DC	5 mA/1 VDC	500	35.0
TRS1-115MPR002	115°C ±3°C	10°C	Make	100 DC	0.500 DC	10.0 DC	5 mA/1 VDC	500	35.0
TRS1-120MPR002	120°C ±3°C	10°C	Make	100 DC	0.500 DC	10.0 DC	5 mA/1 VDC	500	35.0
Part Number	**Switching Temperature (°C)**	**Maximum Differential Temperature (°C)**	**Contact Type**	**Maximum Opening/Closing Voltage (V)**	**Maximum Opening/Closing Current[1] (A)**	**Maximum Opening/Closing Power[1] (W)**	**Minimum Opening/Closing Current**	**Maximum Contact Resistance (mΩ)**	**Weight (g)**

[1] *Lamp load (13.5 V – 3.4 W lamp), 50 VA, 0.5 A in rush 3 A.*

Downloaded from Arrow.com.

Marking

Lot Code 1112 445			
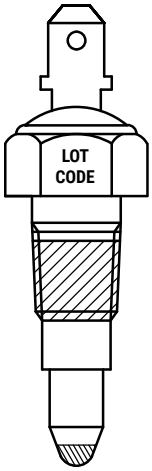	Operating Temperature	(1) 2-3 digits	80 = 80°C 95 = 95°C 110 = 110°C
	Contact Type	(2) 1 digit	B = Break M = Make
	Month of the Year	(4) 2 digits	01 = January 09 = September 10 = October 11 = November 12 = December
	Year	(5) 1 digit	A = 2017 B = 2018 C = 2019 D = 2020 Except I and O

Packaging

Series	Packaging Type	Pieces per Package	Pieces per Box
TRS-P	Tray	100	100

Handling Precautions

Precautions to be taken when using Thermal Reed Switches
(Please read these precautions before using our products)

- Do NOT use in close proximity to strong magnetic parts.
- Do NOT use product under mechanical weight load.
- Do NOT use if dropped or severely shocked.
- Do NOT use with a greater load than specified.
- Avoid stress (especially torsion) in case of additional processing.
- Thermal Reed Switches have a specific resonance frequency.
  Please contact a KEMET representative if an oscillation is added.

Downloaded from Arrow.com.

KEMET Electronics Corporation Sales Offices

For a complete list of our global sales offices, please visit https://www.yageogroup.com/SalesResources/SalesOffices

Disclaimer

YAGEO Corporation and its affiliates do not recommend the use of commercial or automotive grade products for high reliability applications or manned space flight.

All product specifications, statements, information and data (collectively, the "Information") in this datasheet are subject to change. The customer is responsible for checking and verifying the extent to which the Information contained in this publication is applicable to an order at the time the order is placed. All Information given herein is believed to be accurate and reliable, but it is presented without guarantee, warranty, or responsibility of any kind, expressed or implied.

Statements of suitability for certain applications are based on KEMET Electronics Corporation's ("KEMET") knowledge of typical operating conditions for such applications, but are not intended to constitute – and KEMET specifically disclaims – any warranty concerning suitability for a specific customer application or use. The Information is intended for use only by customers who have the requisite experience and capability to determine the correct products for their application. Any technical advice inferred from this Information or otherwise provided by KEMET with reference to the use of KEMET's products is given gratis, and KEMET assumes no obligation or liability for the advice given or results obtained.

Although KEMET designs and manufactures its products to the most stringent quality and safety standards, given the current state of the art, isolated component failures may still occur. Accordingly, customer applications which require a high degree of reliability or safety should employ suitable designs or other safeguards (such as installation of protective circuitry or redundancies) in order to ensure that the failure of an electrical component does not result in a risk of personal injury or property damage.

Although all product–related warnings, cautions and notes must be observed, the customer should not assume that all safety measures are indicated or that other measures may not be required.

When providing KEMET products and technologies contained herein to other countries, the customer must abide by the procedures and provisions stipulated in all applicable export laws and regulations, including without limitation the International Traffic in Arms Regulations (ITAR), the US Export Administration Regulations (EAR) and the Japan Foreign Exchange and Foreign Trade Act.

KEMET is a registered trademark of KEMET Electronics Corporation.
KEMET is a registered trademark of KEMET Electronics Corporation.

Downloaded from Arrow.com.