schaffner MORE POWER TO YOU is now part of TE connectivity

Current-Compensated Chokes - Nanocrystalline Core

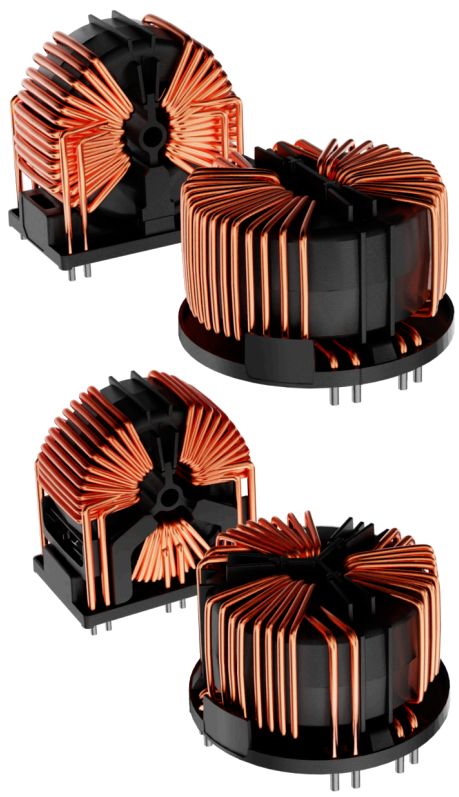

- Rated currents from 25 to 85 A
- Up to 600 VAC and VDC
- 2- and 3-wire configurations
- Horizontal and vertical PCB mounting types
- Ruggedized saturation and thermal behavior
- Open construction for forced and convection cooling
- Straightforward pin-out for easy PCB design
- Nanocrystalline core for high performance at 10 kHz

Performance indicators

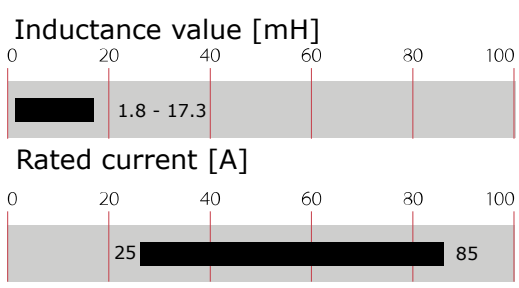

Approvals & Compliances

RoHS

RT common-mode chokes are mainly used to filter EMI noise on AC power lines up to 600 VAC. EMI noise of electronic equipment can go to the power lines and disturb the proper function of other devices like communication devices or control logic of robotics. Thus noise generated by the equipment from switched power electronics or by high slew rates of controllers needs to be filtered. RT common-mode chokes are used to suppress EMI noise in PCB integrated filter designs with line bypass capacitors or in combination with single phase filters for extra low leakage filter designs.

Features and Benefits

- Cost-effective PCB designs for up to 135 A with forced cooling
- EIS (electrical insulation system E332676) acc. to UL 1446
- Compact size and light weight
- Low magnetic leakage flux
- Excellent winding insulation
- Standardized foot print
- Broad range of inductance ratings
- Custom-specific versions on request

Technical Specifications

Rated currents	25 to 85 A @ 60˚C
Operating frequency	DC to 400 Hz
Creepage and clearance distances	Creepage & Clearance (2-line): ≥ 3.5 mm (Coil - Coil) / ≥ 3.0 mm (Coil-Core) Creepage & Clearance (3-line): ≥ 6.3 mm (Coil - Coil) / ≥ 5.5 mm (Coil-Core)
High potential test voltage	3 kV AC 3s (coil to coil) Repetition with max. 80% of the HV test voltage
Rated inductance	1.8 to 17 mH
Operating voltage	300 VAC / 450 VDC (2-line) 600 VAC (3-line)
Overvoltage category	III (acc. IEC 60664-1)
Pollution degree	PD2 (acc. IEC60664-1)
Stray inductance	Max. 0.1% of rated inductance (@ 10 kHz 1 V, 0 A)
Temperature range (operation and storage)	-40˚C to +125˚C
Climatic category	40/125/56 (acc. IEC 60068-1)
Altitude	2'000 m, current and voltage derating
Flammability corresponding to	above UL 94 V0
Vibration and shock	Vibration: 10 Hz to 55 Hz (24 cycles, according IEC 60938-1) Shock: 30 g / 18 ms (3 cycles, according IEC 60938-1) 3M4 (according IEC 60721-3-3)
Design corresponding to	UL/IEC 60938-1/-2 UL1446
MTBF (Mil-HB-217F)	2,000,000 h @ 60˚C/300 V

Typical Applications

- AC and DC filtering for midsize power range drives, photovoltaic inverters, fast chargers, EV charging stations, heat pumps, UPS and switch mode power supplies
- Filter with low leakage current noise or improved immunity against grid disturbances
- Electronic devices, automation and (industrial) LED lighting
- Communication devices
- Medical and laboratory equipment
- Converters

Typical electrical schematic

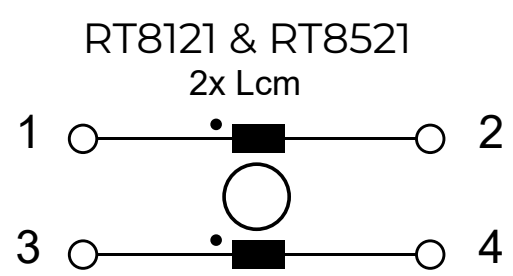

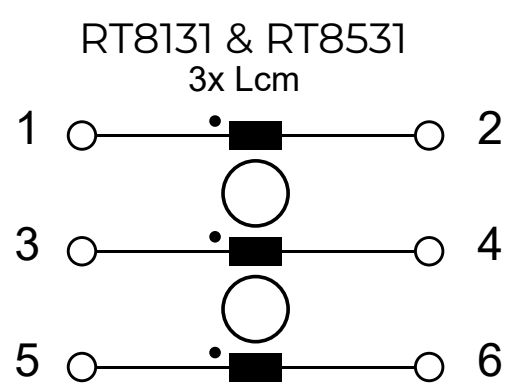

Downloaded from Arrow.com.

RT Series - Nanocrystalline Core

	Convection cooling nominal Current @ 60˚C	* Forced Cooling 3 m/s nominal Current @ 60˚C	** Inductance Ln @ 25˚C 10 kHz	Inductance Ln@25˚C 100 kHz	Resistance @ 25˚C	***Ø Pin ±0.1	Weight
	[A]	[A]	[mH/path]	[mH/path]	[mΩ/path]	ØP [mm]	[g]
Horizontal 2-line							
RT8121-25-17M3	25	45	17.3	2.7	4.6	2.2	160
RT8121-32-12M8	32	51	12.8	2.9	3.4	2.4	220
RT8121-40-10M1	40	64	10.1	2.3	2.2	2.8	230
RT8121-50-8M6	50	80	8.6	1.9	1.7	2x2.2	280
RT8121-63-4M4	63	100	4.4	1	1.1	2x2.2	270
RT8121-85-3M2	85	135	3.2	0.5	0.6	2x3.0	370
Vertical 2-line							
RT8521-25-17M3	25	45	17.3	2.7	4.6	2.2	160
RT8521-32-12M8	32	51	12.8	2.9	3.5	2.4	230
RT8521-40-10M1	40	64	10.1	2.3	2.3	2.8	240
RT8521-50-8M6	50	80	8.6	1.9	1.7	2x2.2	300
RT8521-63-4M4	63	100	4.4	1	1	2x2.2	290
RT8521-85-3M2	85	135	3.2	0.5	0.7	2x3.0	390
Horizontal 3-line							
RT8131-25-12M8	25	45	12.8	2.9	3.5	2.4	260
RT8131-32-10M1	32	51	10.1	2.3	2.5	2.4	260
RT8131-40-6M3	40	64	6.3	1.4	1.9	2x1.9	290
RT8131-50-4M4	50	80	4.4	1	1.2	2x2.2	300
RT8131-63-2M8	63	100	2.8	0.6	0.7	2x2.6	320
RT8131-85-1M8	85	135	1.8	0.28	0.5	2x3.0	380
Vertical 3-line							
RT8531-25-12M8	25	45	12.8	2.9	3.5	2.4	260
RT8531-32-10M1	32	51	10.1	2.3	2.5	2.4	260
RT8531-40-6M3	40	64	6.3	1.4	1.9	2x1.9	290
RT8531-50-4M4	50	80	4.4	1	1.2	2x2.2	300
RT8531-63-2M8	63	100	2.8	0.6	0.8	2x2.6	320
RT8531-85-1M8	85	135	1.8	0.28	0.5	2x3.0	390

Test conditions: Inductance tolerance: +50%, –30%; Resistance tolerance: +15% @ 25˚C; Electrical characteristics @ 25˚C: ±2˚C

* Typical current for forced cooling with 3 m/s. Due to the possible turbulences and degradation of the air stream within an equipment please consider thermal validation.

** Typical stray inductance, max is 0.1% of Ln.

*** Length of pin (dimension P) is always 5.5 mm ± 1 mm.

Downloaded from Arrow.com.

Product selector

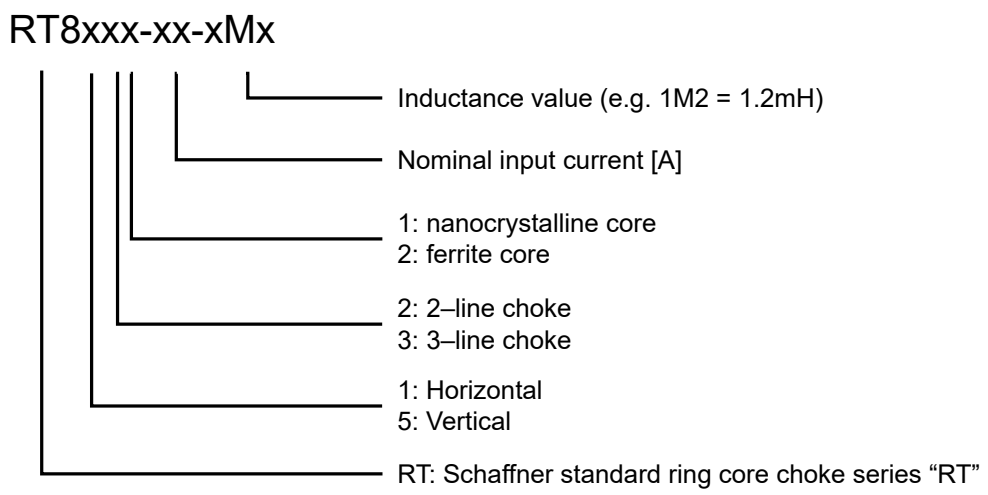

Examples:

RT8121-32-12M8: Horizontal 2-line choke for 32 A, with 12.8 mH

RT8531-50-4M4: Vertical 3-line choke for 50 A, with 4.4 mH

Distribution Inventory

Up-to-date inventory levels for global distributors is available at

https://products.schaffner.com/stock

Downloaded from Arrow.com.

Typical Choke Attenuation And Impedance - 2-Line Versions

Per CISPR 17; 50 ˜/50 ˜ as ym

RT8x21-25-17M3

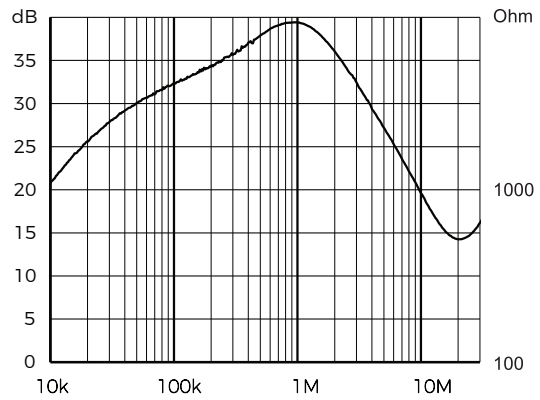

RT8x21-32-12M8

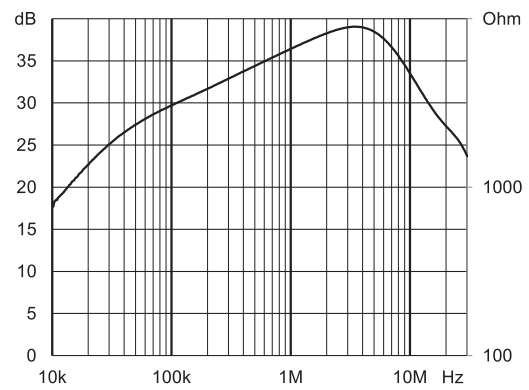

RT8x21-40-10M1

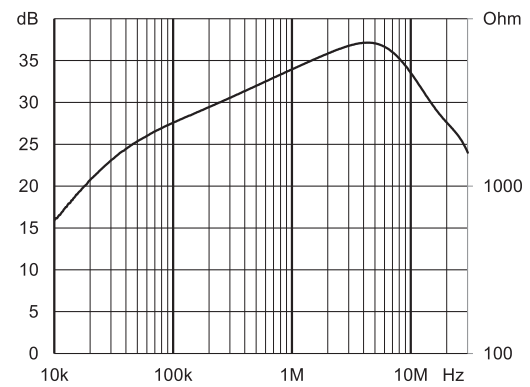

RT8x21-50-8M6

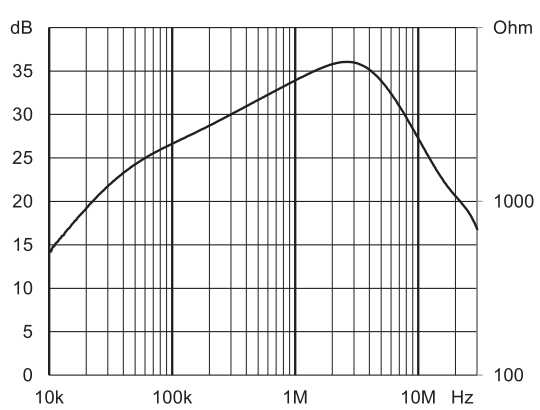

RT8x21-63-4M4

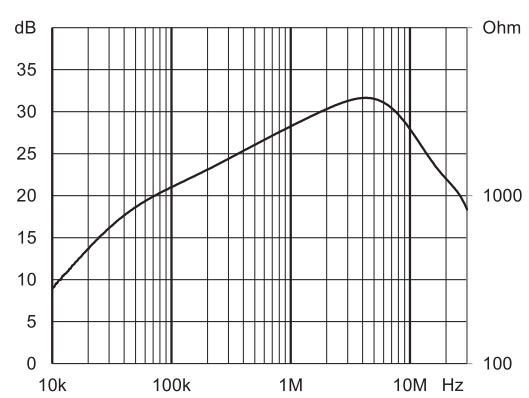

RT8x21-85-3M2

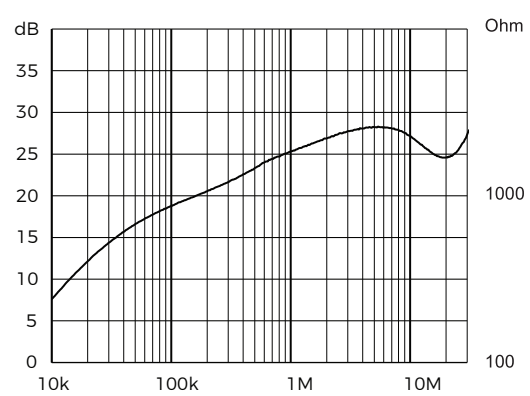

Typical Choke Attenuation And Impedance - 3-Line Versions

Per CISPR 17; 50 ˜/50 ˜ as ym

RT8x31-25-12M8

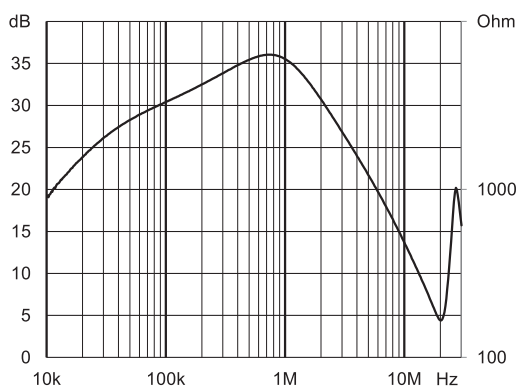

RT8x31-32-10M1

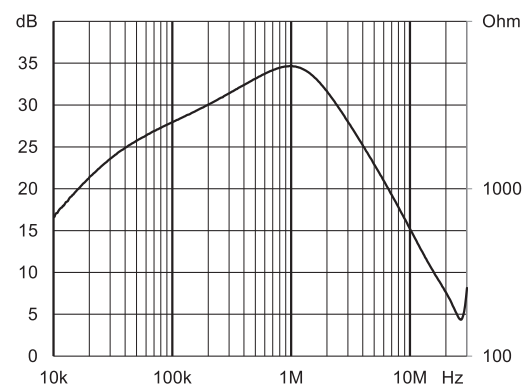

RT8x31-40-6M3

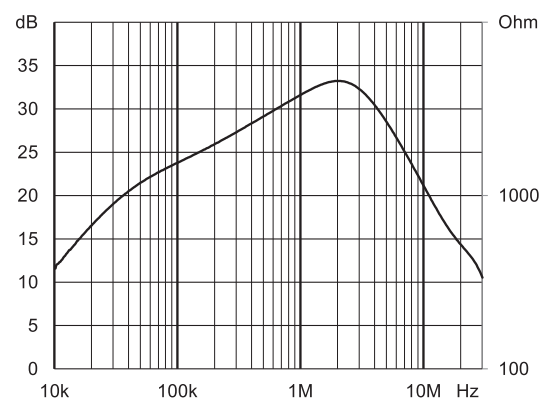

RT8x31-50-4M4

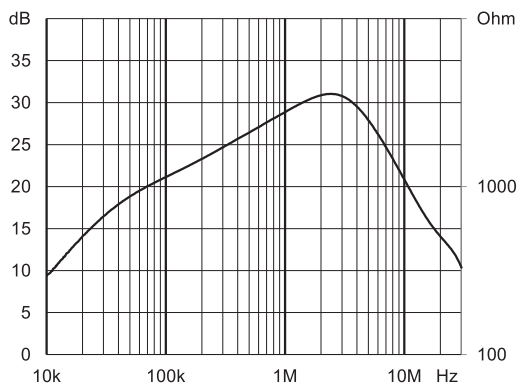

RT8x31-63-2M8

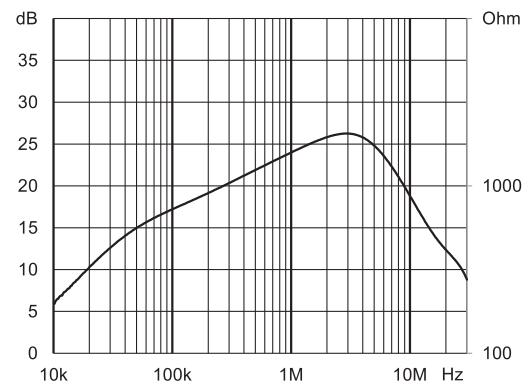

RT8x31-85-1M8

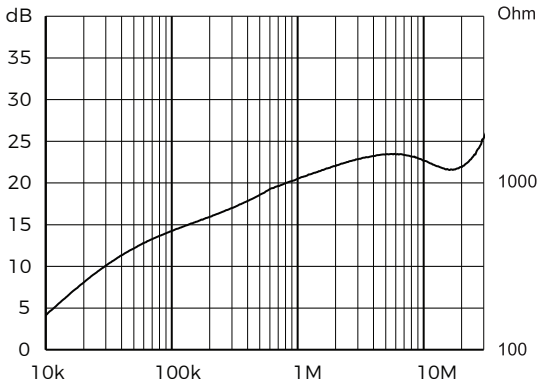

Downloaded from Arrow.com.

Mechanical Data: Horizontal Chokes

All dimensions in mm; 1 inch = 25.4 mm
Tolerances according: ISO 2768-m/EN 22768-m

Horizontal 2-line chokes

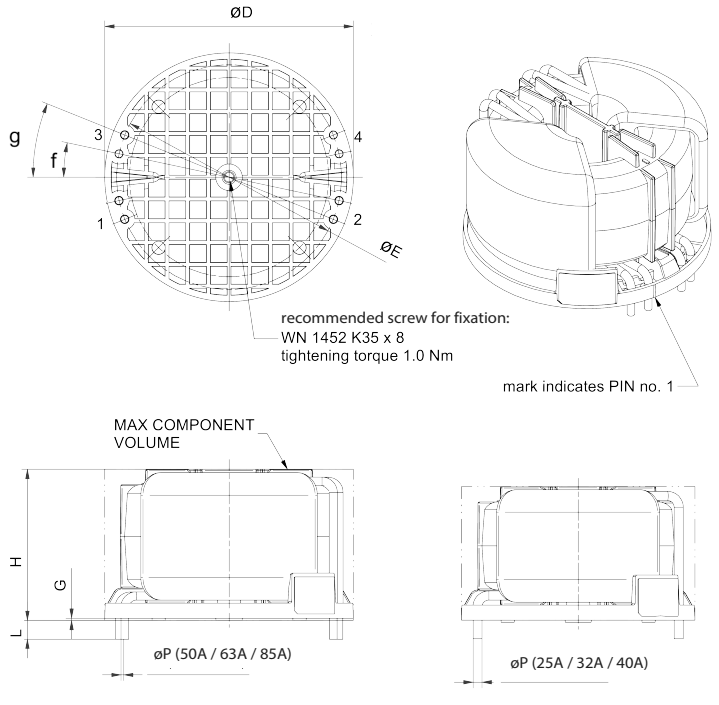

Horizontal 3-line chokes

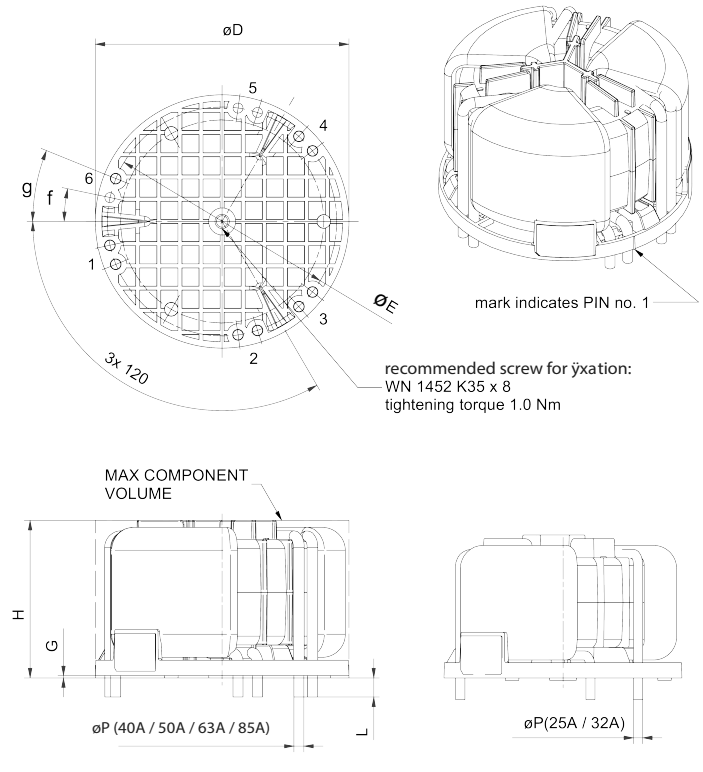

Dimensions

	øD	H	G	øE	f	g	L
	±0.2	(max)	±0.1	±0.2	±1°	±1°	±0.5
2-Line Chokes							
RT8121-25-17M3	56	34	0.6	49	15°		5
RT8121-32-12M8, RT8121-40-10M1	62	37	0.6	55.4	15°		5
RT8121-50-8M6, RT8121-63-4M4	66	41	0.6	59.8	12°	22°	5
RT8121-85-3M2	73.5	47	0.6	64.8	12°	22°	5
3-Line Chokes							
RT8131-25-12M8, RT8131-32-10M1	62	38	0.6	55.4	15°		5
RT8131-40-6M3, RT8131-50-4M4, RT8131-63-2M8	66	42	0.6	59.8	12°	22°	5
RT8131-85-1M8	73.5	46	0.6	64.8	12°	22°	5

Downloaded from Arrow.com.

Mechanical Data: Vertical Chokes

All dimensions in mm; 1 inch = 25.4 mm
Tolerances according: ISO 2768-m/EN 22768-m

Vertical 2-line chokes

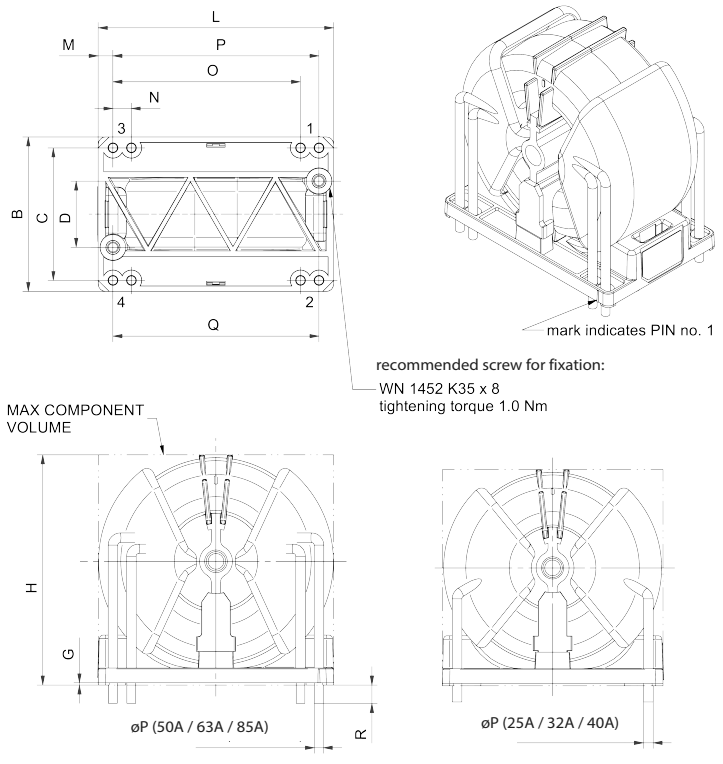

Vertical 3-line chokes

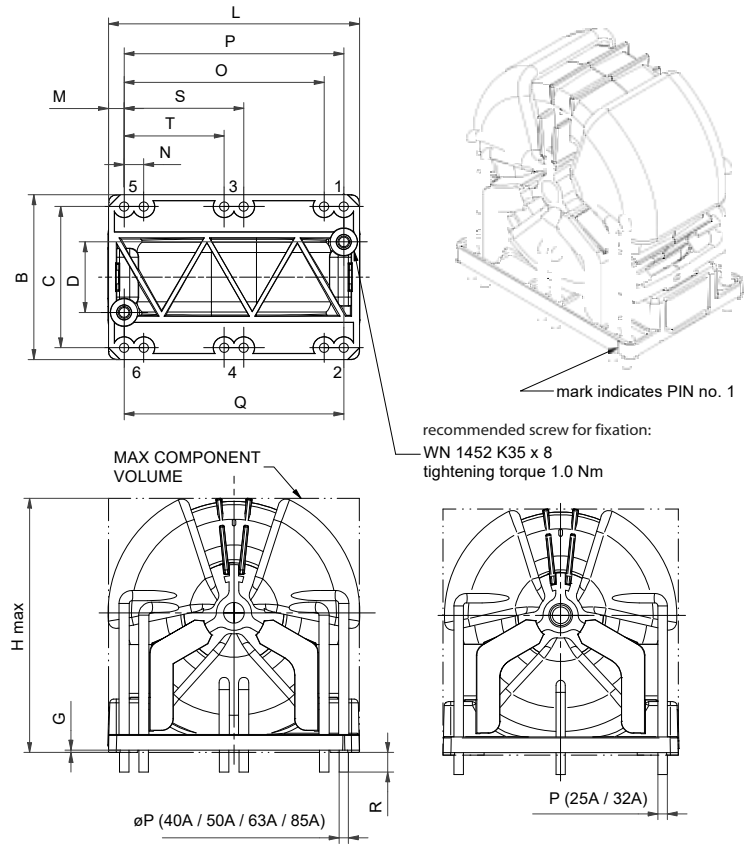

Dimensions

	L ±0.2	B ±0.2	H (max)	G ±0.1	C ±0.4	D ±0.2	M ±0.1	N ±0.4	O ±0.4	P ±0.4	Q ±0,4	S ±0.4	T ±0.2	R ±0.5
2-Line Chokes														
RT8521-25-17M3	55	36	55	0.6	30	12	4			47	46			5
RT8521-32-12M8, RT8521-40-10M1	60	38	60	0.6	32	12	4			52	46			5
RT8521-50-8M6, RT8521-63-4M4	64	42	64	0.6	36	18	4	5	51	56	56			5
RT8521-85-3M2	71	46	70	0.6	40	18	4.5	6	56	62	56			5
3-Line Chokes														
RT8531-25-12M8, RT8531-32-10M1	60	38	63	0.6	32	12	4			52	46		26	5
RT8531-40-6M3, RT8531-50-4M4, RT8531-63-2M8	64	42	67	0.6	36	18	4	5	51	56	56	30.5	25.5	5
RT8531-85-1M8	71	46	74	0.6	40	18	4.5	6	56	62	56	28	34	5

Downloaded from Arrow.com.

Soldering Profile

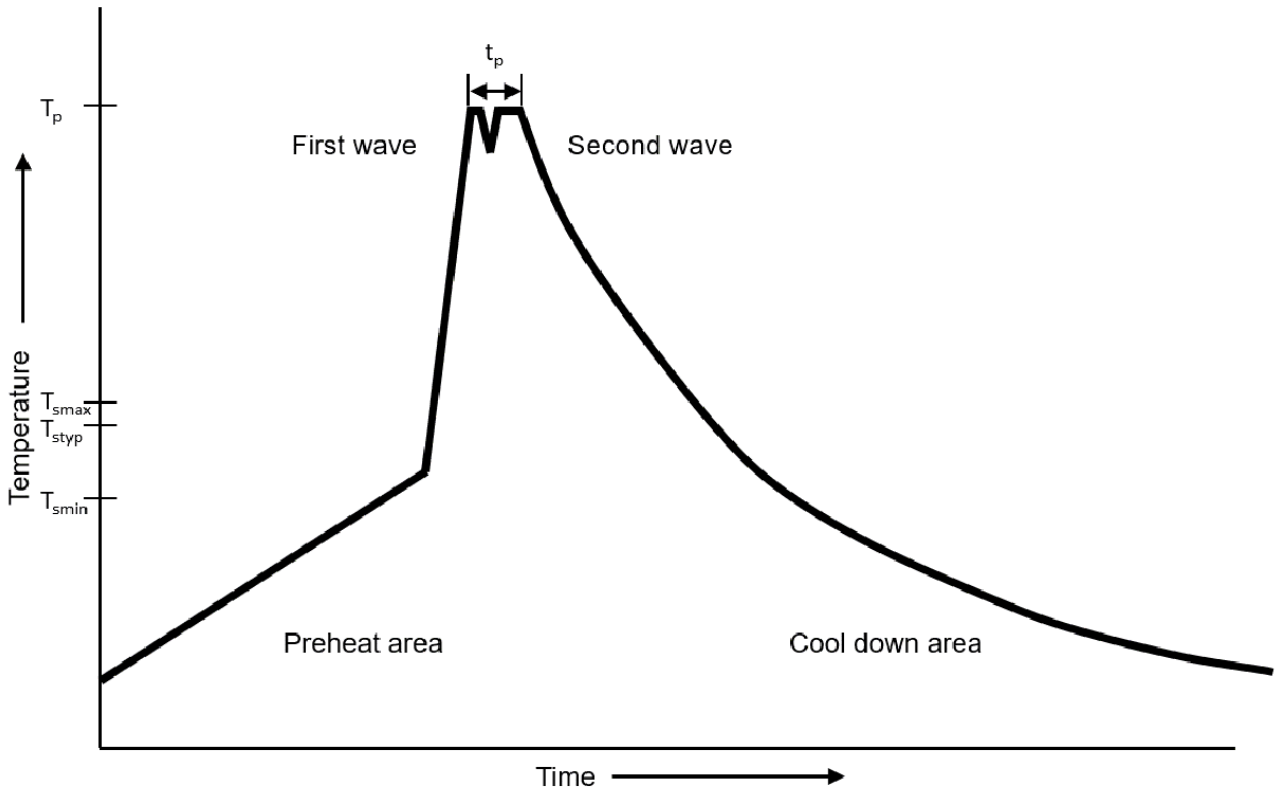

Reference IEC61760-1:2020

Profile Feature		Lead (Pb) Free Solder
Preheat	Temperature min. (T_{smin})	100 °C
	Temperature typ. (T_{styp})	120 °C
	Temperature max. (T_{smax})	130 °C
	Time (T_{smin} to T_{smax})(t_s)	70 seconds
ΔPreheat to max Temperature		150 °C max.
Peak temperature (T_p)		250 °C – 260 °C
Time at peak temperature (t_p)		6 seconds max. 2 seconds each wave
Ramp-down rate		~ 2 K/s min. ~ 3.5 K/s typ. ~ 5 K/s max.
Time 25 °C to 25 °C		4 minutes

Manual solder

350 °C ±10 °C, 10 seconds ± 1s (by soldering iron).

Downloaded from Arrow.com.

We are here to help

Read more insights from TE's experts:

Schaffner is now part of TE Connectivity

Learn more about Corcom products

Connect With Us

We make it easier to connect with our experts and are ready to provide the support you need.
Visit **te.com/support** to chat with a Product Information Specialist.

Contact a TE expert today

te.com

©2025 TE Connectivity plc. All Rights Reserved.

TE Connectivity, TE, TE connectivity (logo), and EVERY CONNECTION COUNTS, Schaffner and Schaffner MORE POWER TO YOU are trademarks owned or licensed by TE Connectivity plc. family of companies. All other logos, products and/or company names referred to herein might be trademarks of their respective owners.

While TE has made every reasonable effort to ensure the accuracy of the information in this document, TE does not guarantee that it is error-free, nor does TE make any other representation, warranty or guarantee that the information is accurate, correct, reliable or current. TE reserves the right to make any changes to the information contained herein without prior notice. TE Connectivity assumes only those obligations set forth in the terms and conditions for this product and shall in no event be liable for any incidental, indirect, or consequential damages arising out of the sale, resale, use, or misapplication of the product. TE expressly disclaims any implied warranties with respect to the information contained herein, including, but not limited to, implied warranties of merchantability or fitness for a particular purpose. Dimensions, specifications and/or information contained herein are for reference purposes only and are subject to change without notice. Consult TE for the latest dimensions, specifications and/or information. Users of TE Connectivity products must make their own assessment as to whether the respective product is suitable for the respective desired application.

ED 09/25

schaffner MORE POWER TO YOU is now part of TE connectivity

Downloaded from Arrow.com.