PRODUCT NO.
62684-__21_0A_LF

PLASTIC REEL AN

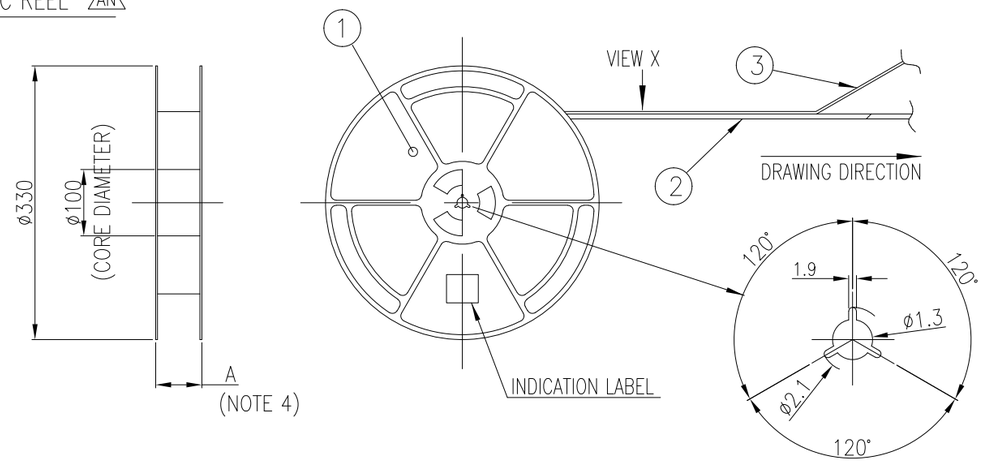

CAT. NO. & DIMENSIONS AN

Preferred Part	NO. OF CONTACTS (n)	CAT. NO.	DIMENSIONS			
			A ± 5	B ± 0.1	C ± 0.1	D ± 0.3
●	32	62684-322100ALF	48.4	20.2	40.4	44
●	34	62684-342100ALF	48.4	20.2	40.4	44
●	36	62684-362100ALF	48.4	20.2	40.4	44
	40	62684-402100ALF	48.4	20.2	40.4	44
	43	62684-432100ALF	48.4	20.2	40.4	44
	45	62684-452100ALF	48.4	20.2	40.4	44
	50	62684-502100ALF	48.4	20.2	40.4	44
	55	62684-5521N0ALF	60.4	26.2	52.4	56
●	40	62684-402100AHLF	48.4	20.2	40.4	44
●	45	62684-452100AHLF	48.4	20.2	40.4	44
●	50	62684-502100AHLF	48.4	20.2	40.4	44

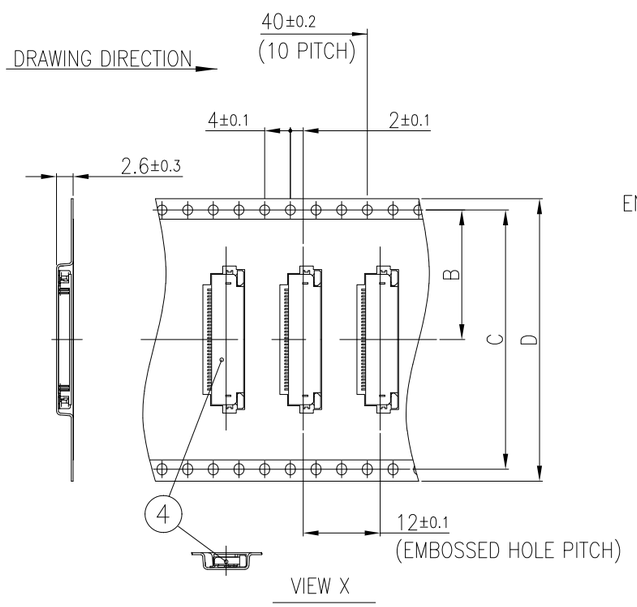

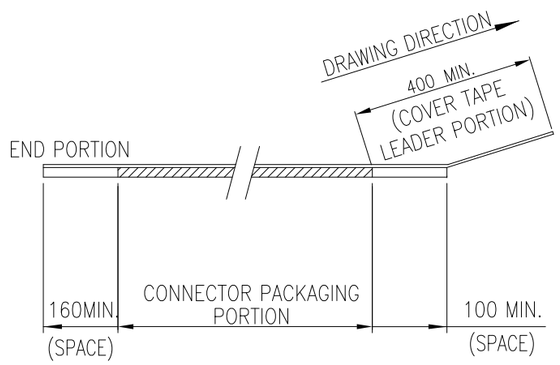

CONNECTOR PACKAGING STYLE

CAT. NO.	SURFACE TREATMENT	OTHER	REEL
62684-__21_0ALF	GOLD PLATING	———	PLASTIC REEL AN
62684-__21_0AHLF		HALOGEN FREE	

PARTS LIST

PT NO	PARTS NAME	CAT. NO.	MATERIAL	Q'TY	NOTE
1	REEL		POLYSTYRENE AN	1	COLOR : WHITE or BLACK AN
2	PLASTIC (EMBOSS) TAPE	———	PS	—	COLOR : TRANSPARENCY
3	COVER	———	POLYESTER/POLYETHYLENE	—	COLOR : TRANSPARENCY
4	CONNECTOR	62684-__21_A_LF	SEE SHEET 2	2000	

NOTE AN

1. THIS PRODUCT IS TOP CONTACT TYPE CONNECTOR USED FOR FPC AND COPES WITH AUTOMATIC MOUNTING (SMT).
2. THIS CATALOG NO. INDICATES PLASTIC TAPE PACKAGED CONNECTOR.
3. SEE JIS C 0806 (PACKING OF ELECTRONIC COMPONENTS ON CONTINUOUS TAPES (SURFACE MOUNTING DEVICES)) FOR SHAPE AND DIMENSIONS OF PLASTIC (EMBOSS) TAPE AND REEL.
4. A DIMENSION IS PORTION OF THE CORE.
5. PRODUCT SPEC : 110-450H. APPLICATION SPEC : GS-20-097.

ltr	ecn no	dr	date
A	J00527	T.H	2000-7-31
AJ	ELX-J-21605	S.W	2015-8-6
AK	ELX-J-33053	S.W	2019-3-28
AL	ELX-J-36059	S.W	2020-2-17
AM	ELX-J-43057	S.W	2021-11-25
AN	ELX-J-49146	S.W	2023-08-31

sheet index	revision	AN	AN	AN	AN	AN
	sheet	1	2	3	4	5

mat'l. code: SEE_TABLE
surface: ISO 1302
tolerance: ISO 406 ISO 1101
tolerances unless otherwise specified: angles 0°±5°; linear 0.X/±5, 0.XX/±5
projection: MM
scale N/A

dr	S.WATANABE	2023-08-31
engr	S.WATANABE	2023-08-31
chr	AN.MOHAMMAD-NABEEL	2023-08-31
appd	Y.KAMEDA	2023-08-31

product family: 58DF
title: PLASTIC TAPE PACKGED 0.5mm CONTACT SPACING CONNECTOR
dwg no: 62684
sheet 1 of 5
size: A3
type: Product Customer Drawing

© 2016 AFCI

Downloaded from Arrow.com.

PRODUCT NO.
62684-__21_A_LF

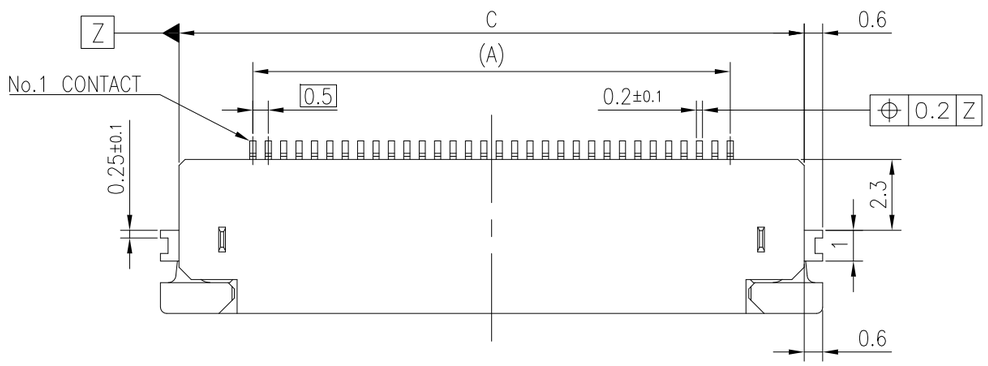

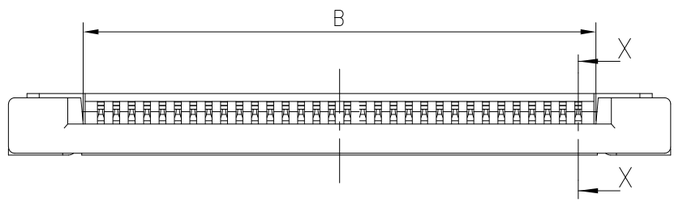

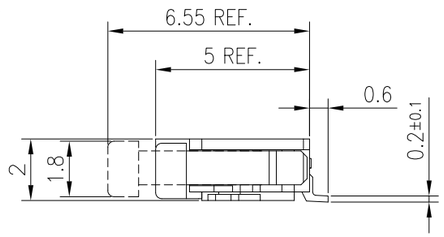

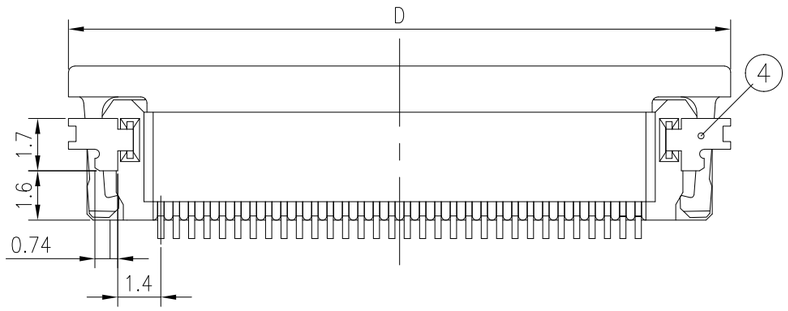

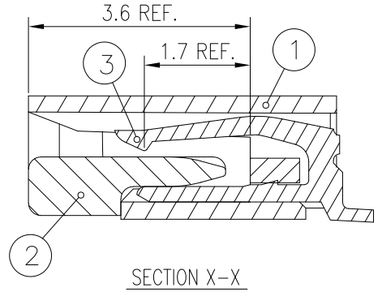

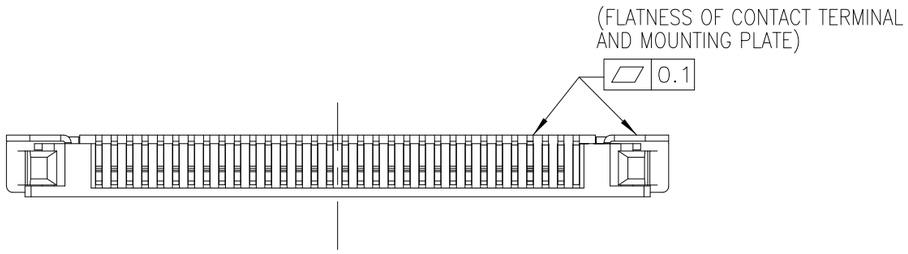

PARTS LIST

PT NO.	PARTS NAME	MATERIAL		Q'TY	NOTE
		62684-__21_ALF	62684-__21_AHLF		
1	HOUSING	GLASS FILLED THERMOPLASTIC (UL94V-0)	GLASS FILLED THERMOPLASTIC (UL94V-0) (HALOGEN FREE)	1	COLOR : BEIGE
2	SLIDER	GLASS FILLED THERMOPLASTIC (UL94V-0)	GLASS FILLED THERMOPLASTIC (UL94V-0) (HALOGEN FREE)	1	COLOR : BLACK
3	CONTACT	PHOSPHOR BRONZE : Ni UNDERPLATED 1.27μmMIN. Au PLATED 0.05μmMIN.		n	
4	MOUNTING PLATE	BRASS : Ni UNDERPLATED 1.27μmMIN. Sn PLATED 1μmMIN.		2	

n : NO. OF CONTACTS

CAT. NO. & DIMENSIONS AN

NO. OF CONTACTS (n)	CAT. NO.	DIMENSIONS				HOUSING MATERIAL
		A	B	C	D	
32	62684-32210ALF	15.5	16.65	20.3	21.5	PA9T
34	62684-34210ALF	16.5	17.65	21.3	22.5	
36	62684-36210ALF	17.5	18.65	22.3	23.5	
40	62684-40210ALF	19.5	20.65	24.3	25.5	
43	62684-43210ALF	21.0	22.15	25.8	27.0	
45	62684-45210ALF	22.0	23.15	26.8	28.0	
50	62684-50210ALF	24.5	25.65	29.3	30.5	
55	62684-5521NALF	27.0	28.15	31.8	33.0	LCP
40	62684-40210AHLF	19.5	20.65	24.3	25.5	
45	62684-45210AHLF	22.0	23.15	26.8	28.0	
50	62684-50210AHLF	24.5	25.65	29.3	30.5	

NOTE AN

1. THIS PRODUCT IS TOP CONTACT TYPE CONNECTOR USED FOR FPC AND COPES WITH AUTOMATIC MOUNTING (SMT).
2. SEE SHEET No.1 REGARDING PLASTIC TAPE PACKAGED PRODUCT.
3. SEE SHEET No.5 REGARDING RECOMMENDED PC BOARD LAYOUT AND CABLE.
4. THE HOUSING WILL WITHSTAND EXPOSURE TO 260°C PEAK TEMPERATURE FOR 10SECONDS IN A REFLOW SOLDERING OVEN.
5. THE PRODUCT THAT THE END HAS "LF" MEETS EUROPEAN DIRECTIVES AND OTHER COUNTRY REGULATIONS AS DESCRIBED IN GS47-0004.

mat'l. code: SEE_TABLE	surface: ISO 1302	tolerance: ISO 406 ISO 1101	projection
ltr / ecn no / dr / date	tolerances unless otherwise specified		product family: 58DF
AN	angles	linear: 0.X/±0.3; 0.XX/±0.3	MM
			title: 0.5mm CONTACT SPACING CONNECTOR
			scale 5:1
	dr: S.WATANABE 2023-08-31		dwg no: 62684 — sheet 2 of 5 — size A3
	engr: S.WATANABE 2023-08-31		
	chr: AN.MOHAMMAD-NABEEL 2023-08-31		
	appd: Y.KAMEDA 2023-08-31		type: Product Customer Drawing
sheet index / revision sheet			

Amphenol FCi

© 2016 AFCI

Downloaded from Arrow.com.

PRODUCT NO.
62684-__11_0A_LF

PLASTIC REEL AN

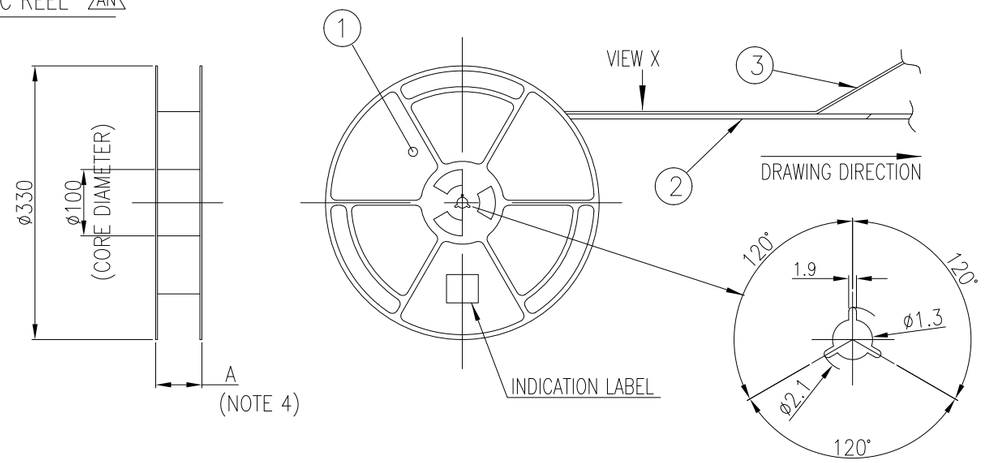

CAT. NO. & DIMENSIONS AN

Preferred Part	NO. OF CONTACTS (n)	CAT. NO.	DIMENSIONS			
			A ± 5	B ± 0.1	C ± 0.1	D ± 0.3
●	32	62684-321100ALF	48.4	20.2	40.4	44
	38	62684-381100ALF	48.4	20.2	40.4	44
	40	62684-401100ALF	48.4	20.2	40.4	44
	45	62684-451100ALF	48.4	20.2	40.4	44
	50	62684-501100ALF	48.4	20.2	40.4	44
	60	62684-6011N0ALF	60.4	26.2	52.4	56
●	40	62684-401100AHLF	48.4	20.2	40.4	44
●	45	62684-451100AHLF	48.4	20.2	40.4	44
●	50	62684-501100AHLF	48.4	20.2	40.4	44
●	55	62684-5511N0AHLF	60.4	26.2	52.4	56
	57	62684-5711N0AHLF	60.4	26.2	52.4	56
●	60	62684-6011N0AHLF	60.4	26.2	52.4	56

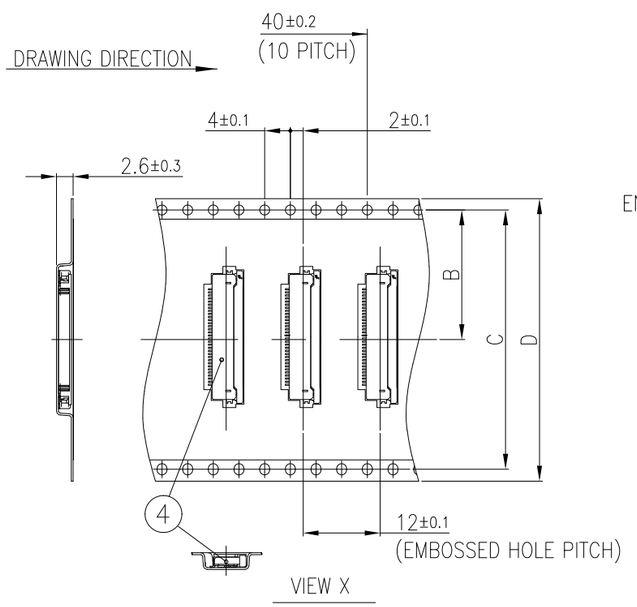

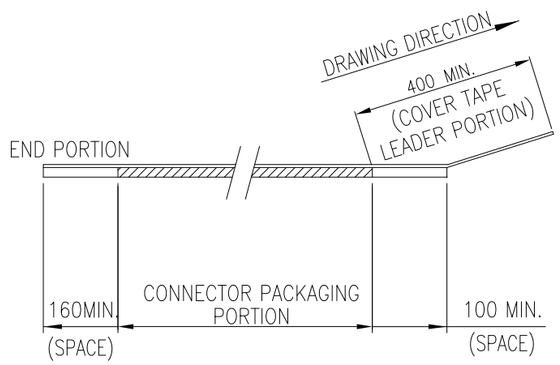

CONNECTOR PACKAGING STYLE

CAT. NO.	SURFACE TREATMENT	OTHER	REEL
62684-__11_0ALF	GOLD PLATING	———	PLASTIC REEL AN
62684-__11_0AHLF		HALOGEN FREE	

PARTS LIST

PT NO	PARTS NAME	CAT. NO.	MATERIAL	Q'TY	NOTE
1	REEL		POLYSTYRENE AN	1	COLOR : WHITE or BLACK AN
2	PLASTIC (EMBOSS) TAPE	———	PS	—	COLOR : TRANSPARENCY
3	COVER	———	POLYESTER/POLYETHYLENE	—	COLOR : TRANSPARENCY
4	CONNECTOR	62684-__11_A_LF	SEE SHEET 4	2000	

NOTE AN

1. THIS PRODUCT IS BOTTOM CONTACT TYPE CONNECTOR USED FOR FPC AND COPES WITH AUTOMATIC MOUNTING (SMT).
2. THIS CATALOG NO. INDICATES PLASTIC TAPE PACKAGED CONNECTOR.
3. SEE JIS C 0806 (PACKING OF ELECTRONIC COMPONENTS ON CONTINUOUS TAPES (SURFACE MOUNTING DEVICES)) FOR SHAPE AND DIMENSIONS OF PLASTIC (EMBOSS) TAPE AND REEL.
4. A DIMENSION IS PORTION OF THE CORE.
5. PRODUCT SPEC : 110-450H. APPLICATION SPEC : GS-20-097.

mat'l. code SEE_TABLE	surface ISO 1302 √	tolerance ISO 406 ISO 1101	projection
ltr / ecn no / dr / date	tolerances unless otherwise specified		product family 58CF
AN	angles 0°±5°	linear 0.X/±5, 0.XX/±5	MM
			title: PLASTIC TAPE PACKGED 0.5mm CONTACT SPACING CONNECTOR
			scale N/A
	dr S.WATANABE 2023-08-31		dwg no 62684 — sheet 3 of 5 — size A3
	engr S.WATANABE 2023-08-31		
	chr AN.MOHAMMAD-NABEEL 2023-08-31		
	appd Y.KAMEDA 2023-08-31		type Product Customer Drawing
sheet index / revision sheet			

Amphenol FCi

© 2016 AFCI

Downloaded from Arrow.com.

PRODUCT NO.
62684-__11_A_LF

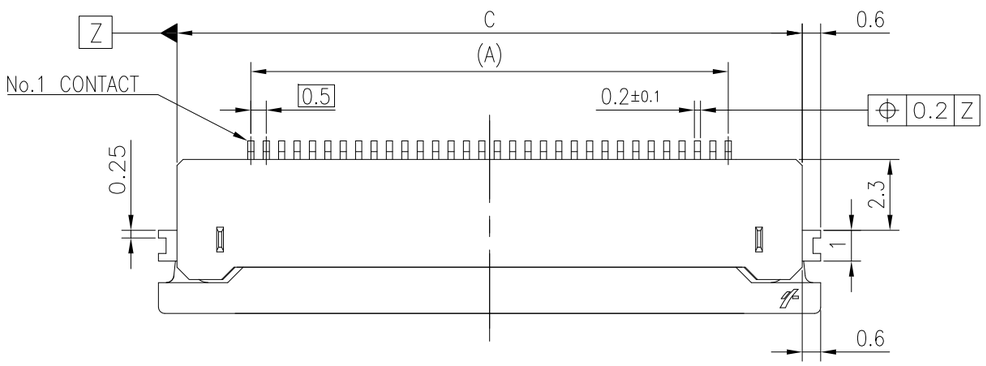

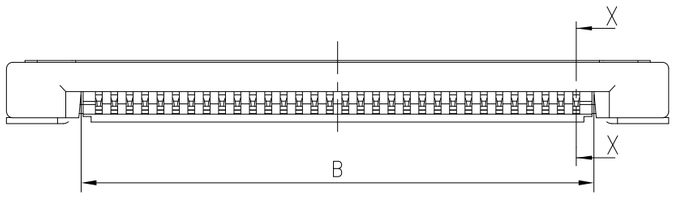

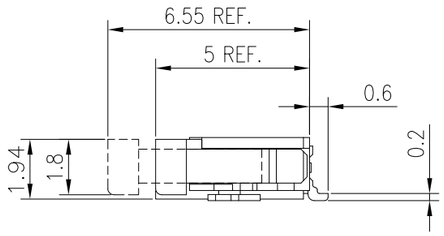

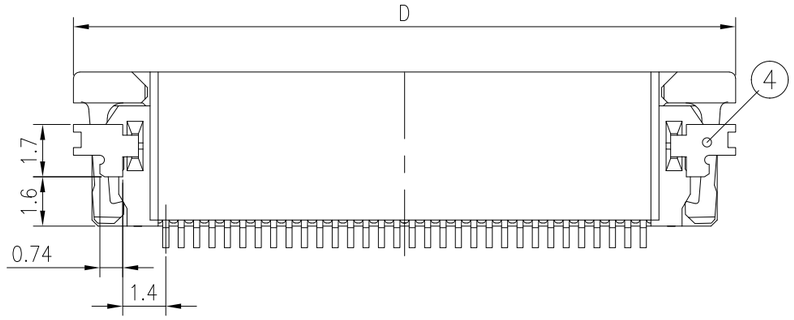

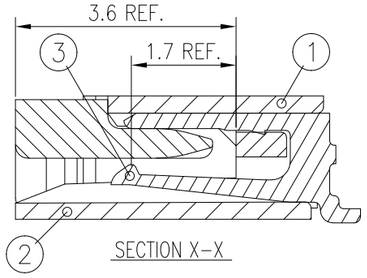

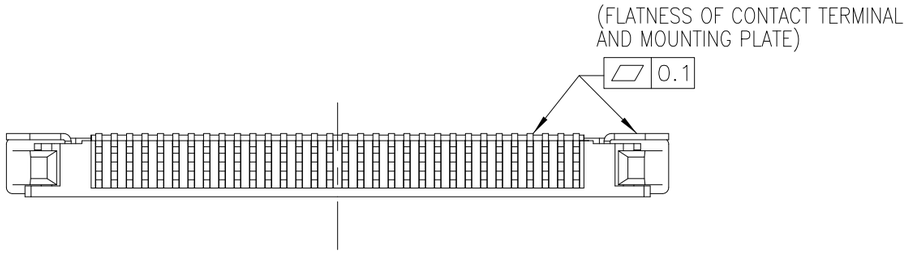

PARTS LIST

PT NO.	PARTS NAME	MATERIAL		Q'TY	NOTE
		62684-__11_ALF	62684-__11_AHLF		
1	HOUSING	GLASS FILLED THERMOPLASTIC (UL94V-0)	GLASS FILLED THERMOPLASTIC (UL94V-0) (HALOGEN FREE)	1	COLOR : BEIGE
2	SLIDER	GLASS FILLED THERMOPLASTIC (UL94V-0)	GLASS FILLED THERMOPLASTIC (UL94V-0) (HALOGEN FREE)	1	COLOR : BLACK
3	CONTACT	PHOSPHOR BRONZE : Ni UNDERPLATED 1.27μmMIN. Au PLATED 0.05μmMIN.		n	
4	MOUNTING PLATE	BRASS : Ni UNDERPLATED 1.27μmMIN. Sn PLATED 1μmMIN.		2	

n : NO. OF CONTACTS

CAT. NO. & DIMENSIONS AN

NO. OF CONTACTS (n)	CAT. NO.	DIMENSIONS				HOUSING MATERIAL
		A	B	C	D	
32	62684-32110ALF	15.5	16.65	20.3	21.5	PA9T
38	62684-38110ALF	18.5	19.65	23.3	24.5	
40	62684-40110ALF	19.5	20.65	24.3	25.5	
45	62684-45110ALF	22.0	23.15	26.8	28.0	
50	62684-50110ALF	24.5	25.65	29.3	30.5	
60	62684-6011NALF	29.5	30.65	34.3	35.5	
40	62684-40110AHLF	19.5	20.65	24.3	25.5	LCP
45	62684-45110AHLF	22.0	23.15	26.8	28.0	
50	62684-50110AHLF	24.5	25.65	29.3	30.5	
55	62684-5511NAHLF	27.0	28.15	31.8	33.0	
57	62684-5711NAHLF	28.0	29.15	32.8	34.0	
60	62684-6011NAHLF	29.5	30.65	34.3	35.5	

NOTE AN

1. THIS PRODUCT IS BOTTOM CONTACT TYPE CONNECTOR USED FOR FPC AND COPES WITH AUTOMATIC MOUNTING (SMT).
2. SEE SHEET No.3 REGARDING PLASTIC TAPE PACKAGED PRODUCT.
3. SEE SHEET No.5 REGARDING RECOMMENDED PC BOARD LAYOUT AND CABLE.
4. THE HOUSING WILL WITHSTAND EXPOSURE TO 260°C PEAK TEMPERATURE FOR 10SECONDS IN A REFLOW SOLDERING OVEN.
5. THE PRODUCT THAT THE END HAS "LF" MEETS EUROPEAN DIRECTIVES AND OTHER COUNTRY REGULATIONS AS DESCRIBED IN GS47-0004.

mat'l. code SEE_TABLE	surface ISO 1302	tolerance ISO 406 ISO 1101	projection
ltr / ecn no / dr / date	tolerances unless otherwise specified		
AN	angles	linear 0.X/±0.3 / 0.XX/±0.3	MM
			scale 5:1
	dr S.WATANABE 2023-08-31		
	engr S.WATANABE 2023-08-31		Amphenol FCi
	chr AN.MOHAMMAD-NABEEL 2023-08-31		
	appd Y.KAMEDA 2023-08-31		
sheet index / revision sheet			

product family	58CF
title	0.5mm CONTACT SPACING CONNECTOR
dwg no	62684
sheet 4 of 5	size A3
type	Product Customer Drawing

© 2016 AFCI

Downloaded from Arrow.com.

RECOMMENDED CABLE (FFC) AN
(NOTE1, NOTE2)

n : NO. OF CONTACTS

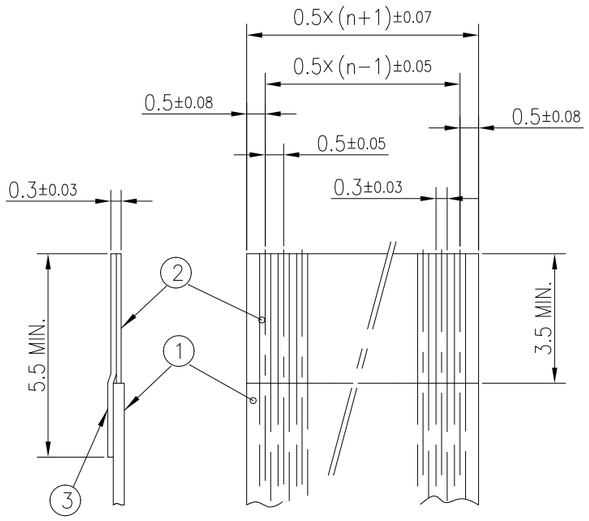

PT. NO.	DESCRIPTION	MATERIAL	THICKNESS (um)
1	INSULATOR	FLAME RESISTING POLYESTER OR EQUIVALENT	25
2	CONDUCTOR	COPPER FOIL (PLATING : GOLD)	35 OR 50
3	SUPPORTING TAPE	FLAME RESISTING POLYESTER OR EQUIVALENT	

RECOMMENDED CABLE (FPC)
(NOTE1, NOTE2)

n : NO. OF CONTACTS

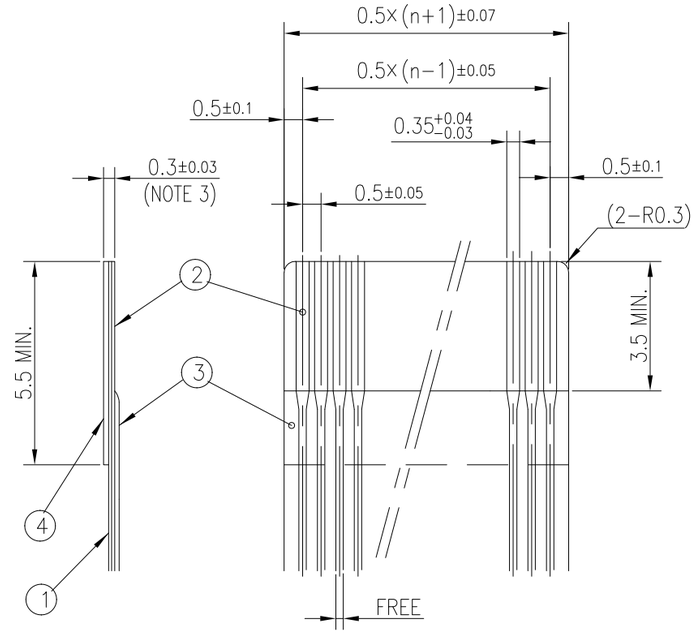

PT.NO.	DESCRIPTION	MATERIAL	THICKNESS (um)
1	BASE FILM	POLYIMIDE OR POLYESTER OR EQUIVALENT	25
2	CONDUCTOR	COPPER FOIL (PLATING : GOLD) (NOTE5)	35 OR 50
3	OVERLAY	POLYIMIDE OR POLYESTER OR EQUIVALENT	
4	SUPPORTING TAPE	POLYESTER OR POLYIMIDE OR EQUIVALENT	

RECOMMENDED PC BOARD LAYOUT
(COMPONENT SIDE) (NOTE4, NOTE5)

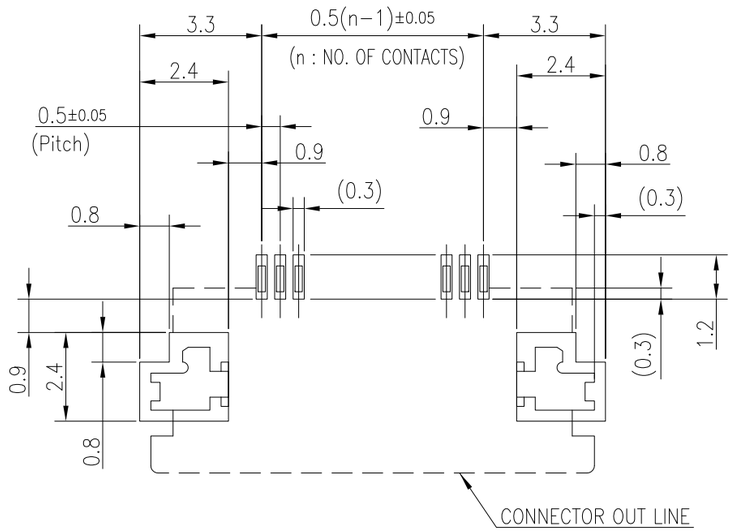

NOTES

1. NO BURR AT EACH PORTION.
2. NO PEELING IN COMMON USE.
3. TOTAL THICKNESS LIMIT OF EACH MATERIAL (INCLUDING ADHESIVE AGENT) IS SPECIFIED.
4. AN RECOMMENDED STENCIL THICKNESS IS 120~150um.
5. AN RECOMMENDED STENCIL OPENING RATIO IS 100%.

mat'l. code SEE_TABLE				surface ISO 1302	tolerance ISO 406 ISO 1101	projection	product family 58CF/DF
ltr	ecn no	dr	date	tolerances unless otherwise specified			title
AN				angles	linear 0.X/±0.05	MM	RECOMMENDED PC BOARD LAYOUT AND CABLE
					linear 0.XX/±0.05	scale 6:1	
				dr	S.WATANABE 2023-08-31	Amphenol FCi	dwg no 62684 sheet 5 of 5 size A3
				engr	S.WATANABE 2023-08-31		
				chr	AN.MOHAMMAD-NABEEL 2023-08-31		
				appd	Y.KAMEDA 2023-08-31		type Product Customer Drawing
sheet index	revision sheet						

© 2016 AFCI

Downloaded from Arrow.com.