# Data Sheet | Item Number: 756-3104/040-050

Power cable; M12A plug; angled; 4-pole; Length: 5 m

https://www.wago.com/756-3104/040-050



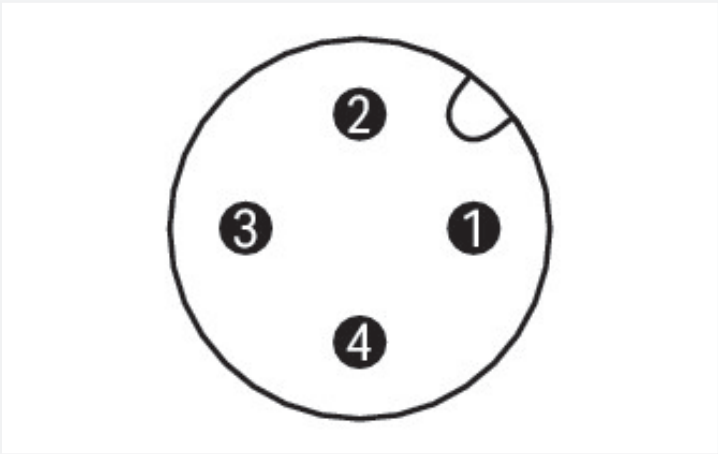


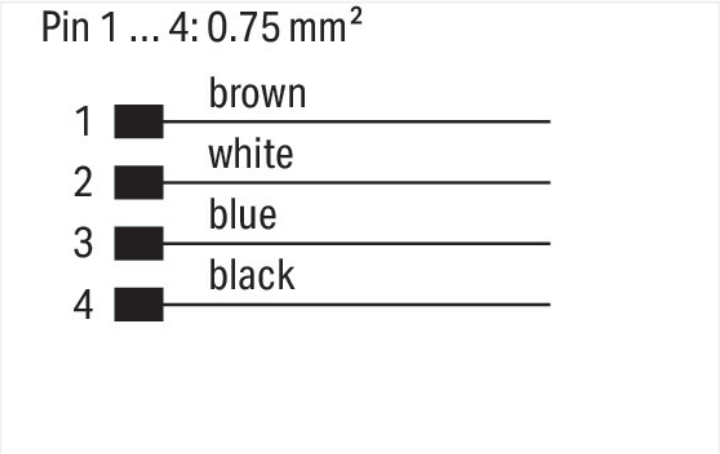


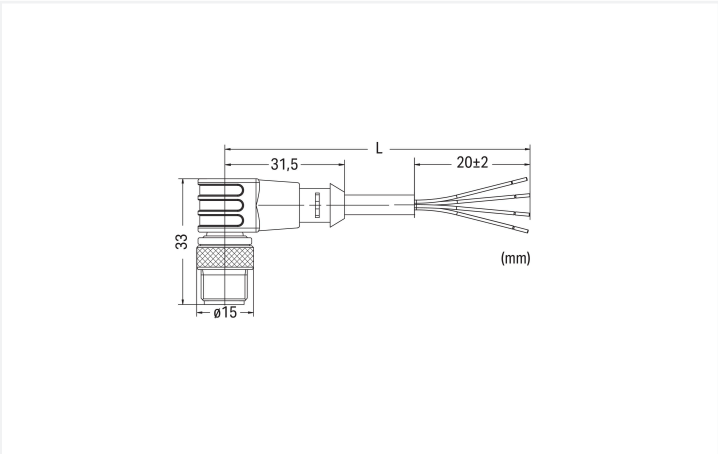


Dimensions in mm

**Short description:**

- PUR, halogen-free
- UL / CSA
- Suitable for drag chains
- Silicon- and CFC-free
- High resistance to microbes, hydrolysis, oil, chemicals and UV radiation
- High chemical resistance
- Cable used: UL listed

| Technical data | |
|---|---|
| Operating voltage | 250 VAC/DC |
| Insulation resistance | >$10^9$ Ω |
| Conductor resistance | ≤ 26 Ω/km |



Downloaded from Arrow.com.

## Mechanical data

| | |
|---|---|
| Weight | 10 g |

## Commercial data

| | |
|---|---|
| PU (SPU) | 1 pcs |
| Packaging type | Box |
| Country of origin | DE |
| GTIN | 4045454772536 |
| Customs tariff number | 85444290900 |
| End of Sale | 2024-05-01 |
| End of Production | 2024-05-15 |
| End of Delivery | 2024-06-01 |
| End of Service and Repair | 2025-06-01 |

## Product Classification

| | |
|---|---|
| UNSPSC | 26121629 |
| eCl@ss 10.0 | 27-06-18-01 |
| eCl@ss 9.0 | 27-06-18-01 |
| ETIM 9.0 | EC001855 |
| ECCN | NO US CLASSIFICATION |

## Environmental Product Compliance

| | |
|---|---|
| RoHS Exemption | 6(c) |
| SCIP notification number (Austria) | 7a6bcff1-96ec-4a11-a20e-e33ae8dee9dc |
| SCIP notification number (Belgium) | c9af765f-255e-48a7-ba8a-ab7e49b24be2 |
| SCIP notification number (Bulgaria) | 290af6c9-aebe-4e3e-9512-1e8b581885f0 |
| SCIP notification number (Czech Republic) | 8f80d8d6-1b07-4ea6-90cc-021b960a9489 |
| SCIP notification number (Denmark) | db06766c-8027-491c-9ff3-fbd6d6bc4f7a |
| SCIP notification number (Finland) | 8be40021-0963-4a95-8ba6-2963e9909d92 |
| SCIP notification number (France) | f38534ad-a8c0-4705-8e41-06e3b06e061f |
| SCIP notification number (Germany) | 45e7e8a8-d323-43e1-9ad0-cc2ef0865920 |
| SCIP notification number (Hungary) | c53e8861-a2ec-4a21-a652-e03bb1714fb8 |
| SCIP notification number (Italy) | 525111dc-41d2-4248-b02e-a895c2af3580 |
| SCIP notification number (Netherlands) | 066b4417-a4c0-404d-aba3-d21a03f33eed |
| SCIP notification number (Poland) | 387a5a32-ee8d-4a5e-aaea-917ee9225ef6 |
| SCIP notification number (Romania) | 2e84879b-1bad-4032-a5a3-77daa0735685 |
| SCIP notification number (Sweden) | 1fa0ebb5-759a-4e0b-b325-9364f881077f |

## Approvals / Certificates

### General approvals

| Approval | Standard | Certificate Name |
|---|---|---|
| UL<br>Underwriters Laboratories Inc. | UL 2238 | E519602 |


Downloaded from Arrow.com.

## Downloads

### Environmental Product Compliance

**Compliance Search**

Environmental Product Compliance 756-3104/040-050

### Documentation

**System Description**

| | | |
|---|---|---|
| I/O-SYSTEM – SPEED-WAY, General Product Information | pdf 1035.20 KB | |

### CAD/CAE-Data

**CAE data**

WSCAD Universe 756-3104/040-050


Downloaded from Arrow.com.