CONN SIZE	FILTER DESIGNATION	FILTER CIRCUITS	CAPACITANCE VALUE	CAPACITANCE TOLERANCE	3 dB MAX CUTOFF FREQ (MHz)	DIELECTRIC WITHSTANDING VOLTAGE	CONTACT RATING	CONTACT RESIST	WORKING VOLTAGE DC -55°C TO +125°C	MINIMUM INSERTION LOSS-DECIBELS (dB) 5 MHz	10 MHz	20 MHz	50 MHz	100 MHz	200 MHz	500 MHz	1 GHz
37	E	Pi	4000pF	+100% -0%	.8	150V	5A	.010 OHM MAX	50V	8	13	20	35	48	61	76	80

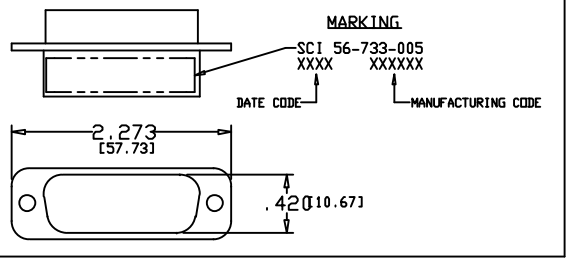

1. SHELL: NICKEL PLATED ZINC
2. INSULATORS: UL94V-0
3. CONTACTS: COPPER ALLOY: .000030 GOLD IN SOCKET CONTACT MATING AREAS.
4. RADIO FREQUENCY GROUND CONTACT FROM THE CONNECTOR SHELL TO THE MATING CONNECTOR IS ASSURED BY A COAXIAL SPRING CLIP

FILTER ELEMENT LOCATION

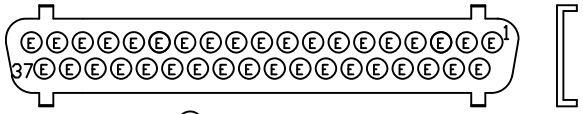

E = 51-620-803

SOCKET VIEW

THIS DOCUMENT CONTAINS PROPRIETARY INFORMATION AND IS COPYRIGHTED. EXCEPT WITH THE WRITTEN PERMISSION OF SPECTRUM CONTROL INC., OR ITS SUBSIDIARIES, SUCH INFORMATION SHALL NOT BE PUBLISHED OR DISCLOSED TO OTHERS OR USED FOR ANY PURPOSE AND THIS DOCUMENT SHALL NOT BE DUPLICATED IN WHOLE OR IN PART.

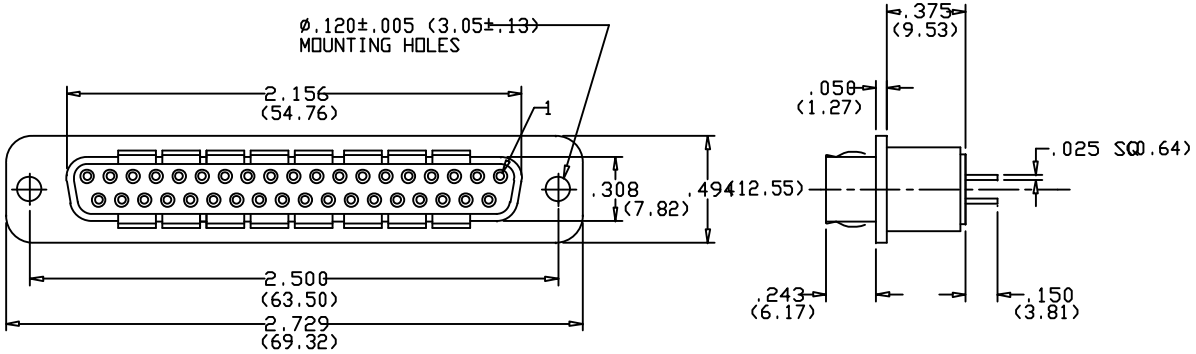

SOCKET VIEW

REV. NO. 11	UNLESS OTHERWISE SPECIFIED DIMENSIONS ARE IN INCHES.	TOLERANCES UNLESS OTHERWISE SPECIFIED Fractions ±1/64	CONNECTOR PRODUCTS DIVISION ERIE, PENNSYLVANIA
CN 6002	CADD SCALE: FULL	Dec. .xx±	SPECTRUM CONTROL INC.
CHANGE NOTICE	PLOT SCALE: 2x	Dec. .xxx±.015	Dwn G. SLAGLE — Description 37L FILTERED CONNECTOR SKT - PCB
		Angles ±0° 30'	Date 7/15/97
		CODE IDENT. NO. 33095	Apvd. — B — 56-733-005
			Sheet 1 of 1

Quality Products From The Specialists In Electro-Magnetic Compatibility

Downloaded from Arrow.com.