THERMAL INTERFACE PRODUCTS

Thermal Compounds, Adhesives & Interface Materials *140–145*

High Performance Thermal Compound *140*

General & Thermal High Performance Epoxy *146–155*

Cost-effective accessory products that facilitate installation and improve the thermal performance of both standard and custom heat dissipation components. Included are thermal joint compounds; filled epoxy systems; adhesives; thermally conductive insulating wafers, washers, pads and mounting hardware.

Downloaded from Arrow.com.

THERMAL COMPOUNDS, ADHESIVES & INTERFACE MATERIALS

120 SERIES

The **120 Series** Silicone Oil-Based Thermal Joint Compound fills the minute air gap between mating surfaces with a grease-like material containing zinc oxide in a silicone oil carrier. It possesses an excellent thermal resistance of only 0.05°C/W for a 0.001 in. film with an area of one square inch. There is no measurable increase in case temperature of a mounted semiconductor on a heat sink after the 6-month stabilization period (Time versus Thermal Resistivity graph below).

TYPICAL VALUES FOR THERMAL RESISTANCE, CASE TO SINK (Øcs) WHEN THERMAL JOINT COMPOUNDS ARE USED		
Case Style Characteristics	Mounting Torque in inch • pounds (N•M)	Typical Thermal Resistance (°C/W)
TO-3	8 (0.9)	0.09
TO-66	9 (0.9)	0.14
TO-220	8 (0.9)	0.50
0.19 (4.8) stud x 0.44 (11.2) hex	15 (1.7)	0.16
0.25 (6.4) stud x 0.69 (17.5) hex	30 (3.39)	0.10
0.38 (9.7) stud x 1.06 (26.9) hex	75 (8.47)	0.07
0.50 (12.7) stud x 1.06 (26.9) hex	125 (14.12)	0.07
0.75 (19.1) stud x 1.25 (31.8) hex	600 (67.79)	0.052

120 SERIES - THERMAL JOINT COMPOUND	
Characteristic	Description
Volume Resistivity	5 X 10^{14} ohm-cm
Dielectric Strength	225 volts/mil
Specific Gravity	2.1 min.
Thermal Conductivity @ 36°C	0.735 W/(m)(K) 5.1(Btu) (in.)/(hr)(ft^2)(°F)
Thermal Resistivity (P)	56 (°C)(in.)/watt
Bleed, % after 24 hrs @ 200°C	0.5
Evaporation, % after 24 hrs @ 200°C	0.5
Color	opaque white
Shelf life	5 years
Operating Temperature Range (°C)	-40/+200

120 SERIES - ORDER GUIDE	
Series - P/N	Container Size
120-SA	4 gram plastic pak
120-2	2 oz (0.06 kg) jar
120-5	5 oz (0.14 kg) tube
120-8	8 oz (0.23 kg) jar
120-80	5 lb (2.27 kg) can
120-320	20 lb (9.08 kg) can

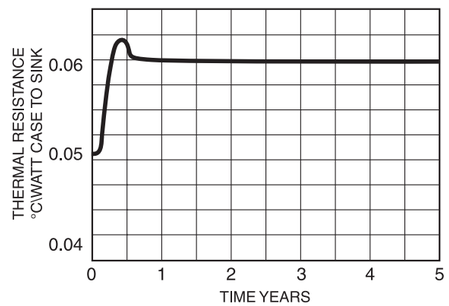

HIGH PERFORMANCE THERMAL COMPOUND

122 SERIES

122 Series Thermal Joint Compound is a stable, silicone based, thixotropic paste developed to provide premium performance at an affordable price. It is formulated to significantly reduce contact thermal resistance where power densities are concentrated in devices such as flip chip, reduced die size, and 'overclock' microprocessors. When applied as a thin film between a Wakefield-Vette heat sink and device it possesses superior thermal conductivity compared to traditional 'grease'. It is compatible with automated or manual dispensing methods and is fully RoHS compliant.

122 SERIES THERMAL JOINT COMPOUND	
Typical Characteristics	Description
Appearance	Smooth Gray paste
Thermal Conductivity	2.5 W / m °K, 17.3 (Btu) (in.)/(hr) (ft^2) (°F)
Thermal Resistance	0.02 °C in 2 / W
Bleed	0.015 wt%, 24 hrs at 200°C
Evaporation	0.150 wt%, 24 hrs at 200°C
Volume Resistivity	1.4 x 1010 ohm-cm
Dielectric Strength	225 volts/mil
Specific Gravity	2.23 (gm/cc) at 25°C
Operating Range	-40°C to 205°C
Shelf Life	5 years

122 SERIES - ORDER GUIDE	
Series - P/N	Container Size
122-10CC	10cc syringe
122-2	2 oz (0.06 kg) jar
122-30CC	30cc syringe

THERMAL COMPOUNDS, ADHESIVES & INTERFACE MATERIALS

126 SERIES

The **126 Series** is a nontoxic, synthetic, ester-based (nonsilicone) Thermal Joint Compound with metal oxide fillers designed to enhance thermal performance characteristics of plastic and metal package devices exceeding that of silicone-based compounds. Solved are problems associated with contamination of wave solder baths and migration of silicone-based products. Shelf life: 5 years.

126 SERIES THERMAL JOINT COMPOUND	
Characteristics	Description
Appearance	Smooth, white homogeneous paste
Solids Content, wt %	65% min
Thermal Conductivity at 36°C	.69 W / m °K, 4.8 (Btu)(in.)/(hr) (ft^2) (°F)
Interface Thermal Resistance	0.043°C/W TO-3 at 0.0008 thick film
Bleed, 24 hrs at 200°C, wt%	0.09% max
Evaporation, 24 hrs at 200°C, wt%	0.6 max
Volume Resistivity	2.3 x 10^{12} ohms-cm
Dielectric Strength	200 volts/mil
Specific Gravity @ 60°F	2.93 (gm/cc)
Penetration	280 to 320
Operating Range	-40°C to 200°C

126 SERIES - ORDER GUIDE	
Series - P/N	Container Size
126-2	2 oz (0.6 kg) jar
126-4	4 oz (0.11 kg) tube
126-4S	4 oz (0.11 kg) syringe
126-5LB	5 lb (2.27 kg) can

DELTABOND™ 152

DeltaBond™ 152 adhesive is ideal for general cementing; thermally bonding semiconductors and components to chassis or heat sinks, while electrically isolating one from the other; fabricating heat sinks or thermal links; and for all permanent bonding of assemblies which require high thermally conductive interfaces. It produces a rigid, high strength bond to most materials when cured. **DeltaBond™ 152** is available in bi-packs, kits, and quarts. Order one bottle of hardener A-4 or B-4 per one quart of **DeltaBond™ 152** separately. Shelf life: 152KA 1 year, all others 2 years.

DELTABOND™ 152		
Characteristics	Hardener Type	
Typical Properties Fully Cured	A4	B4
Thermal conductivity - W/(m) (°K)	0.836	0.908
(Btu) (in.)/(hr) (ft^2) (°F)	5.8	6.3
Thermal resistivity - (°C) (in.) watt	47	42
Bond shear strength 77°F	2,900	2,300
1 in. overlap - psi 125°F	2,200	2,000
etched aluminum to etched aluminum 212°F	400	800
Heat distortion point - °F	130	225
Minimum dielectric strength, v/mil, 0.125 in. sample	400	400
Max operation Continuous temp - °C Intermittent	65 100	150 190

DELTABOND™152		
Mixing Proportions and Working Properties		
Characteristics	A4	B4
Parts of hardener per 100 parts of resin by weight	7.5	3.5
*Working Time - at 77°F	45 min	30 min
†Initial cure time 77°F	8 hrs	6 hrs
150°F	45 min	30 min
250°F	20 min	15 min
‡Post-cure time at a temp in °F	4 hrs @200°F	4 hrs @ 200°F
‡Alternate room temp. aging time at 77°F	4 days	4 days
Working consistency (77°F)	viscous liquid	paste
Working viscosity (77°F) cps	25,000	—

NOTES:

* Since the hardener/resin reaction is exothermic, it is important that batch |size be matched to hardener speed. Working times given are for approximate batch sizes: A—200 gms, B—200 gms. Larger batch sizes will greatly reduce working time.

** For optimum electrical properties, dry parts for 15 minutes at 150°F (65°C) or 30 minutes at 75°F (24°C) to slowly evaporate the thinner and then final cure for 4 hours at 275°F (135°C).

† After initial cure, material may be handled, removed from fixture, etc., but has not yet achieved full properties and should be room temperature aged or post-cured as shown to achieve full physical and electrical properties.

‡ After initial cure, material may be brought to full physical and electrical properties during post-cure or may be room temperature aged for charted length of time to achieve same full properties.

The information contained herein is based on data believed to be reliable but we do not assume responsibility for accuracy. All such information is used at the customer's own risk, conditions of use being beyond our control.

DELTABOND™152			
	Ordering Guide - Resin and Hardener		
Model Number	Resin		Hardener
	Part No.	Container	Part Number
DeltaBond™ 152	152-1A 152-1B 152-KA 152-Q	Bi-Pack (1 oz) Bi-Pack (1 oz) Kit (7 oz Resin, 0.5 oz Hardener) 1 quart (4 lbs)	Included in PIN 152-1 A ("A-4") Type Included in P/N 152-1 B ("B-4") Type Included in P/N 152-KA A-4 (0.316 lb), B-4 (0.14 lb), (order 1 only)
All hardener part numbers: A-4, B-4			

Downloaded from Arrow.com.

THERMAL COMPOUNDS, ADHESIVES & INTERFACE MATERIALS

DELTABOND™ 153

DeltaCast™ 153 is a pourable casting resin having thermal expansion characteristics similar to aluminum and copper allowing assemblies to operate over a very wide temperature range. Ideal for encapsulating components and assemblies, this series' major advantages and uses include potted systems (virtually indestructible), protecting components and systems from moisture and contaminants, securing proprietary circuitry, mechanical support of devices, removal of heat from hot components and the assembly equalizing temperatures, and high voltage isolation. **DeltaCast™ 153** is available in quarts and gallons. Order one bottle of hardener A4 or B4 per one quart of **DeltaCast™ 153** separately. Shelf life: 2 years.

DELTACAST™153		
Characteristics	Hardener Type	
Typical Properties Fully Cured	A4	B4
Thermal conductivity - W/(m) (°K)	0.836	0.908
(Btu) (in.)/(hr) (ft²) (°F)	5.8	6.3
Thermal resistivity - (°C) (in.) watt	47	42
Bond shear strength 77°F	2,500	1,900
1 in. overlap - psi 125°F	—	—
etched aluminum to etched aluminum 212°F	—	—
Heat distortion point - °F	130	225
Minimum dielectric strength, v/mil, 0.125 in. sample	400	400
Max operation temp - °C Continuous	65	150
Intermittent	100	190

DELTACAST™153		
Mixing Proportions and Working Properties		
Characteristics	A4	B4
Parts of hardener per 100 parts of resin by weight	7.5	3.5
*Working Time - at 77°F	45 min	30 min
† Initial cure time 77°F	8 hrs	6 hrs
150°F	45 min	30 min
250°F	20 min	15 min
‡Post-cure time at a temp in °F	4 hrs @200°F	4 hrs @ 200°F
‡Alternate room temp. aging time at 77°F	4 days	4 days
Working consistency (77°F)	heavy liquid	viscous liquid
Working viscosity (77°F) cps	10,000	30,000

DELTACAST™153			
	Ordering Guide - Resin and Hardener		
Model Number	Resin		Hardener
	Part No.	Container	Part Number
DeltaCast™ 153	153-Q	1 quart (4 lbs)	A-4 (0.316 lb), B-4 (0.14 lb), (order 1 only)
All hardener part numbers: A-4, B-4			

DELTABOND™ 154

DeltaBond™ 154 is a medium viscosity, aluminum-filled resin with the best thermal conductivity of this series.It is, however, neither a good electrical insulator nor conductor. Its principal application is that of a good thermal mechanical adhesive for applications such as bonding fins to base plates or structural mounting blocks or brackets to heat sinks. Order one bottle of hardener A4 or B4 per one quart of **DeltaBond™ 154** separately. Shelf life: 2 years.

DELTABOND™ 154		
Mixing Proportions and Working Properties		
Characteristics	A4	B4
Parts of hardener per 100 parts of resin by weight	11.0	4.5
*Working Time - at 77°F	45 min	30 min
† Initial cure time 77°F	8 hrs	6 hrs
150°F	45 min	30 min
250°F	20 min	15 min
‡Post-cure time at a temp in °F	4 hrs @200°F	4 hrs @ 200°F
‡Alternate room temp. aging time at 77°F	4 days	4 days
Working consistency (77°F)	viscous liquid	paste
Working viscosity (77°F) cps	25,000	—

DELTABOND™ 154		
Characteristics	Hardener Type	
Typical Properties Fully Cured	A4	B4
Thermal conductivity - W/(m) (°K)	1.053	1.154
(Btu) (in.)/(hr) (ft²) (°F)	7.3	8.0
Thermal resistivity - (°C) (in.) watt	37	34
Bond shear strength 77°F	3,000	2,400
1 in. overlap - psi 125°F	2,300	2,100
etched aluminum to etched aluminum 212°F	500	800
Heat distortion point - °F	130	225
Minimum dielectric strength, v/mil, 0.125 in. sample	NA*	NA*
Max operation temp - °C Continuous	65	150
Intermittent	100	190

DELTABOND™ 154

DELTABOND™154			
	Ordering Guide - Resin and Hardener		
Model Number	Resin		Hardener
	Part No.	Container	Part Number
DeltaBond™	154-Q1	quart (2.5 lbs)	A-4 (0.316 lb), B-4 (0.14 lb), (order 1 only)
All hardener part numbers: A-4, B-4			

DELTABOND™ 155

DeltaBond™ 155 is an epoxy adhesive formulated for use within the semiconductor industry. An easy to mix spread thixotropic paste, it offers high heat transfer, low shrinkage, and a coefficient of thermal expansion comparable to that of copper and aluminum. This adhesive is principally used to form thermally conductive joints in fabricated heat sinks and between heat sinks and power devices. When used to bond semiconductors to heat sinks, it also serves as an electrical insulator. Its strong bond to a wide variety of substrates resists severe temperature cycling. **DeltaBond™ 155** is only available in kit size. Simply squeeze out equal lengths and mix to uniform color. Shelf life: 1 year.

DELTABOND™ 155	
Characteristics	Hardener Type DeltaBond™155
Typical Properties Fully Cured	
Thermal conductivity - W/(m) (°K)	0.836
(Btu) (in.)/(hr) (ft²) (°F)	5.8
Thermal resistivity - (°C) (in.) watt	47
Bond shear strength 77°F	2,600
1 in. overlap - psi 125°F	—
etched aluminum to etched aluminum 212°F	—
Heat distortion point - °F	130
Minimum dielectric strength, v/mil, 0.125 in. sample	400
Max operation temp - °C Continuous	65
Intermittent	100

DELTABOND™ 155	
Mixing Proportions and Working Properties	
Parts of hardener per 100 parts of resin	by volume 100
*Working Time - at 77°F	90 min
†Initial cure time 77°F	8 hrs
150°F	45 min
250°F	20 min
‡Post-cure time at a temp in °F	4 hrs @ 200°F
‡Alternate room temp. aging time at 77°F	4 days
Working consistency (77°F)	paste
Working viscosity (77°F) cps	paste

DELTABOND™ 155			
Ordering Guide - Resin and Hardener			
Model Number	Resin	Hardener	
	Part No.	Container	Part Number
DeltaBond™ 155	155 Kit	(3 oz resin, 3 oz hardener)	Included in P/N 155

NOTES:

* Since the hardener/resin reaction is exothermic, it is important that batch size be matched to hardener speed. Working times given are for approximate batch sizes: A—200 gms, B—200 gms. Larger batch sizes will greatly reduce working time.

† After initial cure, material may be handled, removed from fixture, etc., but has not yet achieved full properties and should be room temperature aged or post-cured as shown to achieve full physical and electrical properties.

‡ After initial cure, material may be brought to full physical and electrical properties during post-cure or may be room temperature aged for charted length of time to achieve same full properties.

The information contained herein is based on data believed to be reliable but we do not assume responsibility for accuracy. All such information is used at the customer's own risk, conditions of use being beyond our control.

Downloaded from Arrow.com.

THERMAL COMPOUNDS, ADHESIVES & INTERFACE MATERIALS

DELTABOND™ 156

DeltaBond™ 156 Thermally Conductive Adhesive is a modified acrylic adhesive designed for permanent mounting on components where heat must be effectively transmitted. Recommended for electromechanical assemblies to bond components and dissipate heat, it replaces mechanical fasteners and compressible pads, silicone grease, and epoxies; eliminates air entrapment, and other variables related to epoxy mixing. This soft paste requires no mixing and flows easily to allow thin bond lines. Primer activated, cure begins upon assembly. DeltaBond™ Activator fixtures at room temperature in less than 5 minutes. Full strength is developed in 4 to 12 hours and fillets become dry to the touch in 24 hours. It is not recommended to use this durable adhesive without the use of DeltaBond™ Activator. **DeltaBond™ 156** is available in kit size; order 156-K (25 ml Syringe and Activator Kit). Shelf life: 1 year.

DELTABOND™ 156

Characteristics		
Typical Properties Fully Cured	Description	
Test	Results	ASTM
Temperature Range	-65 to 300°F (-54 to 149°C) 300°F to (177°C) Intermittent	
Tensile Strength, at break	2360 psi	D638
Modulus	233,000 psi	D638
Elongation, at break	7.75%	D638
Outgassing	2.5% TLM 0.05% CVCM	E595
Coefficient of Thermal Expansion	7.1×10^{-4} (cm/cm°C)	
Tensile Shear	2500psi	D1002
Thermal Conductivity, K (absolute at 86°F (30°C)	3.47 Btu x in./hr ft^2 °F (0.50 W/m °C)	

Note: The absolute thermal conductivity test was developed specifically for measuring thermal properties of thin film adhesive bonds.

DELTABOND™ 156

Typical Electrical Properties		
Test	Results	ASTM
Dielectric Strength	220 volts/mil	D149
Dielectric Constant, 77°F (25°C)		D150
100 Hz	14.92	
1000 Hz	14.26	
1MM Hz	12.34	
Dissipaton Factor, 77°F (25°C)		D150
100 Hz	0.05	
1000 Hz	0.03	
1MM Hz	0.06	
Volume Resistivity	5.2×10^{11} (ohms-cm)	D257
Surface Resistivity	8.6×10^{13} (ohms)	D257

Note: DeltaBond™ Thermally Conductive Adhesive-High Strength contains a metallic filler which, in certain applications, may have an effect on electrical properties. Therefore, test each particular application to ensure that electrical properties are as required.

DELTABOND™ 156

Model Number	Ordering Guide - Resin and Hardener		
	Resin		Hardener
	Part No.	Container	Part Number
DeltaBond™ 156	156-K	Resin Kit Hardener Syringe - 0.85 fl oz - 25 ml - 2 oz net/0.44 oz fl contents bottle -12ml	Included in kit hardener with brush applicator - 4.2 oz total wt/kt

NOTES:

* Since the hardener/resin reaction is exothermic, it is important that batch size be matched to hardener speed. Working times given are for approximate batch sizes: A—200 gms, B—200 gms. Larger batch sizes will greatly reduce working time.

† After initial cure, material may be handled, removed from fixture, etc., but has not yet achieved full properties and should be room temperature aged or post-cured as shown to achieve full physical and electrical properties.

‡ After initial cure, material may be brought to full physical and electrical properties during post-cure or may be room temperature aged for charted length of time to achieve same full properties.

The information contained herein is based on data believed to be reliable but we do not assume responsibility for accuracy. All such information is used at the customer's own risk, conditions of use being beyond our control.

TO-3, TO-66, TO-220,DO-4, DO-5 SHEET

DELTAPADS™ THERMALLY CONDUCTIVE INSULATORS 173 & 174 SERIES

GREASELESS THERMALLY CONDUCTIVE KAPTON® REINFORCED INSULATORS 175 SERIES

The **173, 174, and 175 Series** are highly efficient thermally conductive insulators designed for semiconductor interface to heat sinks. Their properties eliminate messy concerns associated with thermal greases.

Characteristics	DeltaPads™ 173-7 Series	DeltaPads™ 173-9 Series	DeltaPads™ 174-9 Series	Kapton® 175-6 Series	Test Method
Material Thickness	0.007 in.	0.009 in.	0.009 in.	0.006 in.	Micrometer
Color	Gray	Gray	Tan	Gray	Visual
Tear Strength, lb/in. Typical100	100	100	100	ASTM 0624	
Volume Resistivity, megohm-cm, Minimum Normal	1.0×10^9	1.0×10^9	1.0×10^{13}	1×10^{13}	ASTM D257
Breakdown Voltage, Minimum	4,000	5,000	5,000	6,000	ASTM 0149
Dielectric Constant at 60 Hz and 100 V Maximum	2.70	2.40	2.50	5.5 @ 1,000 Hz	ASTM D 150
Continuous Use Temperature, °C	-60/+200	-60/+200	-60/+200	-60/+200	–
Thermal Conductivity, cal/cm sec. °C, Minimum	3×10^{-3}	3×10^{-3}	1×10^{-2}	1.2×10^{-3}	–
Thermal Resistance (TO-3), 1 in.^{2} °C/W	0.33	0.50	0.25	0.40	–
Recommended Mounting Pressure, lb/in.^{2}	350/550	350/550	350/550	350/550	Formula*

$$*P \text{ (pressure in psi)} = \frac{T \text{ (torque [in.- lb] x N (number of fasteners)}}{0.2 \text{ x D (Thread Dia) x A (contact surface area square inches)}}$$

173-7 Series		173-9 Series	174-9 Series	175-6 Series
No Adhesive	Adhesive Backing	No Adhesive	No Adhesive	Greaseless
–	–	173-9-210P	–	175-6-210P
173-7-220P	–	–	–	175-6-220P
173-7-230P	–	173-9-230P	–	175-6-230P
173-7-240P	173-7-240A	173-9-240P	–	175-6-240P
–	–	–	–	175-6-250P
–	–	–	–	175-6-280P
–	–	–	174-9-310P	175-6-310P
–	–	–	–	175-6-320P
–	–	–	–	175-6-330P
–	–	–	–	175-6-410P
–	–	–	–	175-6-610P
173-7-1212P	–	173-9-1212P	174-9-1212P	–

MECHANICAL DIMENSIONS

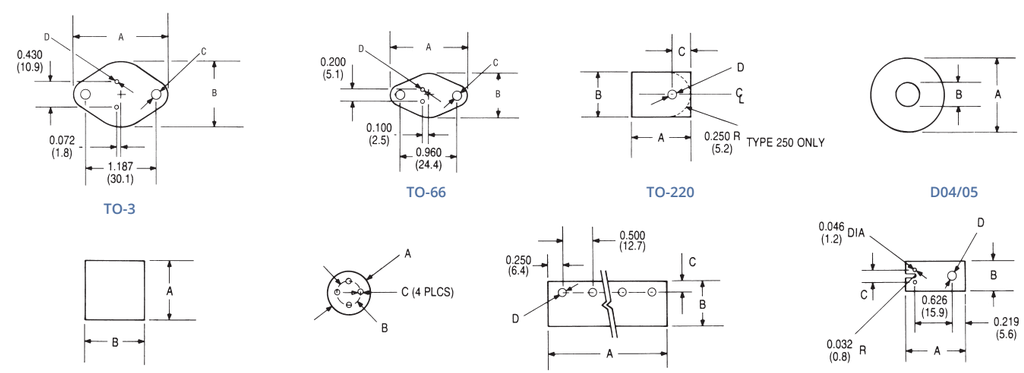

Dimensions: in. (mm)

Downloaded from Arrow.com.

GENERAL & THERMAL HIGH PERFORMANCE EPOXY

BONDATHERM™

BondaTherm™

RoHS

KEY FEATURES OF THE BONDATHERM EQUALIZER KITS:

- Eliminates improper ratios and mixing errors
- Reduces material waste
- Eliminates employee contact with resins
- Eliminates messy hand mixing and transferring
- Increases productivity
- Resins are protected from moisture contamination

Wakefield-Vette Part Number	Description	Packaging
BT-101-50M BT-102-50M BT-301-50M BT-301-200M	Non-Sag 5 Minute BondaTherm Epoxy Adhesive Toughened, Flexible Adhesive System Fast Curing Thermally Conductive Adhesive Fast Curing Thermally Conductive Adhesive	50ml Dual Catridges 50ml Dual Catridges 50ml Dual Catridges 200ml Dual Catridges
BT-01-50M BT-01-200M BT-02-50M BT-02-200M	BondaTherm Equalizer Dispense Gun (50ml) BondaTherm Equalizer Dispense Gun (200ml) BondaTherm Equalizer Static Mixer (50ml) BondaTherm Equalizer Static Mixer (200ml)	- - - -
BT-101-50M-EQZ BT-102-50M-EQZ BT-301-50M-EQZ BT-301-200M-EQZ	Two Dual Cartridges (BT-101-50M), One Gun (BT-01-50M), Three Mixers (BT-02-50M) Two Dual Cartridges (BT-102-50M), One Gun (BT-01-50M), Three Mixers (BT-02-50M) Two Dual Cartridges (BT-301-50M), One Gun (BT-01-50M), Three Mixers (BT-02-50M) Two Dual Cartridges (BT-301-200M), One Gun (BT-01-200M), Three Mixers (BT-02-200M)	Kit Kit Kit Kit
BT-103-50M BT-302-50M	5 Minute Clear Bondatherm Epoxy Adhesive Fast Curing Aluminum Filled Bondatherm Epoxy Adhesive	50ml Dual Catridges 50ml Dual Catridges
BT-401-H BT-402-H BT-403-H	Silver Filled Bondatherm 2 gram Epoxy Hinge Packs Thermally Conductive Epoxy Potting UL Listed 100 gram Bondatherm Hinge Pack Aluminum Filled Bondatherm Epoxy Adhesive for Heat Sinks 100 gram Hinge Pack	2 gram hinge pack 100 gram hinge pack 100 gram hinge pack

BONDATHERM™ CARTRIDGES BT-101-50M

These high bond strength adhesives are clear 100% solids, two component, non-sag adhesives with a quick setting time of 5–46 minutes at room temperature. They are excellent for bonding plated metals, pewter, glass, wood, ceramic, felt, cement, gem stones, most plastics and rubbers. These adhesives were tested in our laboratory for flame retardancy properties. According to our test results they meet the requirements of UL94HB.

APPLICATIONS:

These unique adhesives are ideally suited for a wide range of electronic, electrical, industrial, structural, and jewelry applications. These adhesives are also an excellent choice for field repairs. They are offered in the popular BondaTherm Equalizer Kit dual barrel cartridge dispensing system and bulk packaging.

BONDATHERM™ CARTRIDGES BT-101-50M

FEATURES

- Non-sag consistency
- High bond strength
- Fast room temperature cure – three speeds to choose from
- Water & chemical resistance
- Outstanding thermal shock resistance
- 1:1 mix ratio
- Impact resistance

Specifications	
Color Mix ratio by volume Mixed viscosity, 25°C cps* Solids content, % Specific gravity, 25°C	Semi-transparent (available in black) 1:01 Non-Sag 100 1.15
Shore D hardness 10-3005NS 10-3020NS 10-3046NS	 86 72 65
Work Life, 25°C, minutes 10-3005NS 10-3020NS 10-3046NS	 3-5 10-15 25-30
Handling time, 25°C, minutes 10-3005NS 10-3020NS 10-3046NS	 15-20 30-35 55-60
Cure time, 25°C, hours	24-48
Coefficient of thermal expansion (in/in/°C)	$60x10^{-6}$
Operating temperature range, °C Dielectric strength,V/mil Izod Impact ft-lb/in Dielectric constant, 1KHz at 25°C Dissipation factor, 1KHz at 25°C Volume resistivity, ohm-cm at 25°C	-50 to +130 420 2.7 4 0.017 2.0×10^{14}
Shear strength, psi Aluminum (etched) Cold rolled steel Copper Brass Stainless Steel Galvanized Steel ABS PVC	 1,500 1,000 960 725 750 900 500 335
Polycarbonate Compression strength, psi	250 8,500
Adhesive coverage: a .005-inch bond line will yield approximately 320 sq. ft./gallon	

INSTRUCTIONS FOR USE:

1. Thoroughly mix equal parts of resin to catalyst by weight or volume.
2. Apply evenly to both surface(s) to be bonded.
3. Application to the substrates should be made within five minutes. Larger quantities and/or higher temperatures will reduce the working time. Avoid mixing large quantities and/or at high temperature due to the possibility of creating a high exothermic temperature.
4. Join the coated surfaces. Allow to cure at 60°F (16°C) or higher until adhesive is set. Heat may be added up to 200°F (93°C) to accelerate the cure.
5. Avoid moving parts during cure. Pressure to the substrates is recommended. Maximum shear strength is obtained with a 3-5 mil bond line.

Downloaded from Arrow.com.

GENERAL & THERMAL HIGH PERFORMANCE EPOXY

BT-102-50M BONDATHERM™ CARTRIDGES

A two component system that forms strong structural bonds at room temperature. This unique adhesive system provides high peel and shear strengths. This is excellent for bonding many metals and woods, most plastics and rubbers and masonry products.

BT-102-50M is a toughened, flexible, and impact resistant epoxy adhesive. **BT-102-50M** is a two component system that forms strong structural bonds at room temperature. This unique adhesive system provides high peel and shear strengths. **BT-102-50M** is excellent for bonding many metals and woods, most plastics and rubbers and masonry products. This system is designed for electronic, aerospace and other demanding industrial applications. This product is available in the popular BondaTherm Equalizer dual barrel cartridge system.

FEATURES

- Impact resistant
- Excellent electrical insulator
- High peel and shear
- Outstanding structural bonds
- Convenient 1:1 Ratio
- Retention of strength after environmental aging

Typical Specifications	
Mixed viscosity, 25°C, cps	150,000
Specific gravity, 25°C, Resin Catalyst	 1.32 1.2
Gel time, 100 grams, 25°C Tensile shear strength, psi Durometer, shore D Dielectric strength, V/mil Dielectric constant, 60 Hz Dissipation factor, 60 Hz Volume resistivity, ohm-cm Thermal conductivity, btu·in/hr·ft²·°F Coefficient of thermal expansion, per °C	70 minutes 2,600 70 410 4.4 0.02 1.1×10^{15} 4 10×10^{-5}
Adhesive coverage: a .005-inch bond line will yield approximately 320 sq. ft./gallon	

INSTRUCTIONS FOR USE:

1. Surfaces must be clean and grease free. Use an oil free solvent such as acetone to wipe surfaces. Adhesion can be substantially increased by abrading the surfaces to be bonded with emery cloth, sand paper, carbide grinding tools, and sand blasting. A roughened, porous surface will produce the best results. Any oxidized metal films should be removed just prior to application of the epoxy adhesive mixture.
2. Thoroughly mix equal parts of resin and catalyst by volume.
3. Apply mixed product evenly to both surfaces.
4. Join the adhesive coated surfaces within 60 minutes of mixing resin and catalyst.
5. Cure according to one of the following schedules:

77°F	24-48 hours
150°F	2 hours
180°F	1 hour
200°F	30 minutes

STORAGE, HANDLING, AND AVAILABILITY:

- Store in a cool, dry place in original containers.
- Keep containers closed and stir well before using.

BONDATHERM™ CARTRIDGES BT-301-50M & BT-301-200M

The **BT-301-50M** and **BT-301-200M** have simple 1:1 mix ratios and develop a 1,400 psi Lap Shear strength (aluminum to aluminum) in four hours at room temperature. After just twenty four hours the strength is over 2,200 psi. This is perfect for any thermally conductive applications. Both cartridges are a two component fast curing thermally conductive epoxy adhesive.

These products are specifically formulated for use in the convenient BondaTherm Equalizer dual barrel cartridge system. The **BT-301-50M** and **BT-301-200M** offer fast heat dissipation for a wide range of electronic applications. The black resin and white hardener provide an excellent visual indication of a complete mix.

FEATURES

- Fast room temperature cure
- Thermally conductive
- Forms strong bonds to a variety of substrates
- Electrically insulating
- Vibration and impact resistant

Typical Properties	
Color Resin Hardener Mixed	 Black White Dark Gray
Viscosity, @25°C, cps Resin Hardener	 70,000 70,000
Specific Gravity, @25°C Resin Hardener	 1.5 1.5
Gel Time, 25°C, 15 grams	15 minutes
Durometer, Shore D @25°C @70°C	 80 50
Lapshear Strength (Al to Al), psi After 4 hours After 24 hours	 1,413 2,231
Thermal Conductivity, W/m - °K Dielectric Strength, V/mil Dielectric Constant, 25°C, 100Hz Volume Resistivity, ohm-cm, 25°C	1.04 440 5.3 2.4×10^{12}
Coefficient of Thermal Expansion, ppm/°C Below Tg Above Tg	 45 175
Operating Temperature, °C	-40 to +120

INSTRUCTIONS FOR USE:

1. Surfaces must be clean and grease free. Use an oil free solvent such as acetone to wipe surfaces. Adhesion can be substantially increased by abrading the surfaces to be bonded with emery cloth, sand paper, carbide grinding tools, and sand blasting. A roughened, porous surface will produce the best results. Any oxidized metal films should be removed just prior to application of the epoxy adhesive mixture.
2. Dispense material from BondaTherm Equalizer. Apply mixed product to substrate to be bonded.
3. Join substrates within 3-5 minutes.
4. Cure according to one of the following schedules:
5. 25°C 2-4 hours
   65°C < 10 minutes

STORAGE, HANDLING AND AVAILABILITY:

- Store in a cool, dry place in original containers.
- Please read and understand the Safety Data Sheet (SDS) before using this product.

NOTES:

1. At room temperature, the BT-301-50M and BT-301-200M will reach handle cure within 1-2 hours. The lap shear strength is 1,413 psi after 4 hours.
2. This product is an adhesive and is not designed for potting and encapsulating applications. The BT-301-50M and BT-301-200M are fast reacting epoxy systems and they will create a high exothermic temperature in large mass sizes (avoid mass sizes greater than 25 grams).

Downloaded from Arrow.com.

GENERAL & THERMAL HIGH PERFORMANCE EPOXY

BT-103-50M BONDATHERM™ CARTRIDGES

These high bond strength adhesives are clear 100% solids, two component, low viscosity adhesives with a quick setting time of 5-46 minutes at room temperature. They are excellent for bonding plated metals, pewter, glass, wood, ceramic, felt, cement, gem stones, most plastics, and rubbers. These adhesives were tested in our laboratory for flame retardancy properties. According to our test results they meet the requirements of UL94HB.

These unique adhesives are ideally suited for a wide range of electronic, electrical, industrial, structural, and jewelry applications. These adhesives are also an excellent choice for field repairs. They are offered in the popular TriggerBond® dual barrel cartridge dispensing system and bulk packaging.

FEATURES

- High bond strength
- Outstanding thermal shock resistance
- Water and chemical resistance
- Impact resistance
- 1:1 mix ratio
- Fast room temperature cure – three speeds to choose from

INSTRUCTIONS FOR USE:

1. Thoroughly mix equal parts of resin to catalyst by weight or volume.
2. Apply evenly to both surface(s) to be bonded.
3. Application to the substrates should be made within five minutes. Larger quantities and/or higher temperatures will reduce the working time.
4. Avoid mixing large quantities and/or at high temperature due to the possibility of creating a high exothermic temperature.
5. Join the coated surfaces. Allow to cure at 60°F (16°C) or higher until adhesive is set. Heat may be added up to 200°F (93°C) to accelerate the cure.
6. Avoid moving parts during cure. Pressure to the substrates is recommended. Maximum shear strength is obtained with a 3-5 mil bond line.

Typical Specifications (10-3005)	
Color	Clear (available in black)
Mix ratio by volume	1:01
Mixed viscosity, 25°C cps * Solids	12,000
Content, %	100
Specific gravity, 25°C Shore D hardness	1.15
10-3005	86
10-3020	72
10-3046	65
Work Life, 25°C, minutes	
10-3005	3-5
10-3020	10-15
10-3046	25-30
Handling time, 25°C, minutes	
10-3005	15-20
10-3020	30-35
10-3046	55-60
Cure time, 25°C, hours	24-48
Coefficient of thermal expansion (in/in/°C)	$60x10^{-6}$
Operating temperature range, °C Dielectric strength	-50 to +130
V/mil	420
Izod Impact, ft-lb/in.	2.7
Dielectric constant, 1KHz at 25°C	4.00
Dissipation factor, 1KHZ at 25°C Volume resistivity,	.017
ohm-cm at 25°C Shear strength, psi	2.0×10^{14}
Aluminum (etched) Cold rolled	1,500
Steel Copper	1,000
Brass	960
Stainless Steel	725
Galvanized Steel	750
ABS	900
PVC	500
Polycarbonate	335
Compression strength, psi	250
Adhesive coverage: a .005-inch bond line will yield approximately 320 sq. ft./gallon	

BONDATHERM HARDWARE

Wakefield-Vette Part Number	Description
BT-01-50M	BondaTherm Equalizer Dispense Gun (50ml)
BT-01-200M	BondaTherm Equalizer Dispense Gun (200ml)
BT-02-50M	BondaTherm Equalizer Static Mixer (50ml)
BT-02-200M	BondaTherm Equalizer Static Mixer (200ml)

BONDATHERM EQUALIZER GUN

BT-01-50M BONDATHERM™ CARTRIDGES

FOR USE W/ 200ML CARTRIDGES **BT-01-200M**

BONDATHERM EQUALIZER STATIC MIXERS

BT-02-50M FOR USE W/ 50ML CARTRIDGES

FOR USE W/ 200ML CARTRIDGES **BT-01-200M**

Downloaded from Arrow.com.

GENERAL & THERMAL HIGH PERFORMANCE EPOXY

BONDATHERM EQUALIZER KIT™

Wakefield-Vette Part Number	Description	Packaging
BT-101-50M-EQZ	Two Dual Cartridges (BT-101-50M), One Gun (BT-01-50M), Three Mixers (BT-02-50M)	Kit
BT-102-50M-EQZ	Two Dual Cartridges (BT-102-50M), One Gun (BT-01-50M), Three Mixers (BT-02-50M)	Kit
BT-301-50M-EQZ	Two Dual Cartridges (BT-301-50M), One Gun (BT-01-50M), Three Mixers (BT-02-50M)	Kit
BT-301-200M-EQZ	Two Dual Cartridges (BT-301-200M), One Gun (BT-01-200M), Three Mixers (BT-02-200M)	Kit

(2) Dual Cartridges, (1) Dispense Gun, (3) Static Mixers

BONDATHERM HINGE PACKS BT-401-H

BT-401-H is a two component epoxy adhesive filled with silver. This electrically conductive epoxy resin formulation offers continuity of conductivity with an electrical resistivity value of less than $1x10^{-4}$ ohm-cm. 40-3900 is also well known for its wide operating temperature range, -50 to + 170°C.

BT-401-H is specifically designed for adhesive bonding in microelectronic and optoelectronic applications. Due to its excellent continuity, it has also been used extensively in applications such as micro-wave EMI and RFI shielding, in the assembly or repair of printed circuit boards, wave guides, electronic modules, flat cable, high frequency shields, connectors, circuitry, and as a cold solder. **BT-401-H** is formulated with pure silver (no alloys) and is designed in a convenient 1:1 mix ratio. Both the resin and hardener have silver powder dispersed.

FEATURES

- Electrically conductive
- Thermally conductive
- Room temperature cure
- Easy 1:1 mix ratio
- Good bond strength

STORAGE, HANDLING, AND AVAILABILITY:

- BT-401-H Resin and hardener should be stored at 25°C in original tightly sealed containers. Expected shelf life is twelve months in original unopened containers.
- Filler settling is common with these products. Gently stir resin and hardener before using to make sure fillers are evenly dispersed.

Typical Specifications	
Mix Ratio, by Weight	1:1
Color	Silver
Mixed Viscosity	Creamy Paste
Pot Life, 100 gram mass @ 25°C	1 Hour
Specific Gravity, 25°C	
Resin	2.98
Hardener	1.8
Hardness, Shore D	70
Thermal Conductivity, W/m- °K	7.93
Tensile Lapshear, psi (Al to Al)	700
Flexural Strength, psi	10,200
Volume Resistivity, ohm-cm	0.0001
Operating Temp. Range, °C	-50 to +170
Cure Schedule	a) 24 hours @ 25°C b) 1 hour @ 65°C c) 15 minutes @ 90°C

Downloaded from Arrow.com.

GENERAL & THERMAL HIGH PERFORMANCE EPOXY

BT-402-H

BONDATHERM HINGE PACKS

This system has been formulated to meet the stringent non-burning requirements of UL94 V-0. **BT-402-H** Black Epoxy is used with Catalyst 190 and are listed with Underwriter's Laboratory for passing UL94 V-0. This system offers excellent heat transfer, low shrinkage, and outstanding insulation properties. **BT-402-H** Black with Catalyst 190 passes NASA's outgassing requirements per ASTM E595-07. Other Catalyst's are available as well (30, 150.).

Typical applications for **BT-402-H** include encapsulating power supplies, transformers, coils, insulators, and sensors. This system is an excellent choice for applications requiring high thermal conductivity and flame retardancy.

Typical Specifications	
Viscosity @ 25°C cps, Resin	60,000
Mixed with Cat. 190	28,000
Mixed with Cat. 30	17,000
Mixed with Cat. 150	1,500
Specific Gravity, 25°C	1.6
Hardness, Shore D Color	90
Tensile Strength, psi	Black
Linear Shrinkage, in/in	9,850
Operating Temp. Range,°C	0.002
Dielectric Strength, V/mil Dielectric	-60 to +200
Constant at 60 Hz	485
Volume Resistivity, ohm-cm, 25°C	5.6
Dissipation Factor, 60 Hz	1.5×10^{15}
Thermal Conductivity, W/m- °K	0.015
Compressive Strength, psi	2.16
Coefficient of Expansion, in/in °F	15,000
Heat Distortion, °C Outgassing	1.4×10^{-5}
(with Cat. 190)	155
%TML	0.5
%CVCM	0.01

INSTRUCTIONS FOR USE:

A. With Catalyst 190 listed with UL 94 V-0 (room temperature curing):
   1. By weight, thoroughly mix 5 parts Catalyst 190 to 100 parts BT-402-H resin.
   2. Degas and pour. Cure at room temperature for 12-24 hours at 25°C ambient.

B. With Catalyst 30 listed with UL 94 V-0 and RTI Rating of 130°C (Heat curing - Recommended for higher operating temperature and physical property applications):
   1. By weight, thoroughly mix 10 parts Catalyst 30 to 100 parts BT-402-H resin.
   2. Pour and cure according to one of the following recommended cure schedules:
      a) 85°C (185°F) 3-4 hours
      b) 100°C (212°F) 2-3 hours
      For optimum performance, an additional 2 hours @ 365°F (185°C) is recommended.

C. With Catalyst 150 (room temperature/heat curing):
   1. By weight, thoroughly mix 17 parts Catalyst 150 to 100 parts BT-402-H resin.
   2. Degas and pour. Cure at room temperature for 24 hours or for 2-3 hours at 35-40°C.

BONDATHERM HINGE PACKS

BT-403-H

BT-403-H is a two component, aluminum filled epoxy system. This system is used for making heat resistant tools, parts, or bonds that require the highest thermal conductivity and heat resistance. We have developed this extremely conductive epoxy by formulating it with a unique combination of fillers, particle sizes and dispersion techniques.

BT-403-H has good heat dissipation making this a popular choice for a variety of heat sink applications. Its viscosity is particularly suited for Fin bonding. **BT-403-H** passes NASA's outgassing requirements per ASTM E-595-07.

FEATURES

- Excellent Thermal Conductivity
- Superior Adhesion
- Low Viscosity allows quick self leveling

Typical Specifications	
Color	Grey
Viscosity, 25°C,	
Resin	130,000
Mixed	8,000
Specific Gravity, 25°C	1.81
Working time, 100 grams, 25°C	5 Hours
Durometer, Shore D	
25°C	90
100°C	65
Tensile Strength, psi, 25°C Aluminum	9,000
to Aluminum	
1" overlap	2,500
Compressive Strength, PSI, 25°C Mix	18,500
Ratio, by weight	100:10
Operating temperature, °C	-55 to 155
Coefficent of Thermal Expansion, °C	28×10^{-6}
Thermal Conductivity, W/m- °K	4.5
Outgassing	
% TML	0.91
% CVCM	0.07

STORAGE, HANDLING, AND AVAILABILITY:

- BT-401-H Resin and hardener should be stored at 25°C in original tightly sealed containers. Expected shelf life is twelve months in original unopened containers.
- Filler settling is common with these products. Gently stir resin and hardener before using to make sure fillers are evenly dispersed.

Downloaded from Arrow.com.