1958413-1 Product Details

Share Print Email

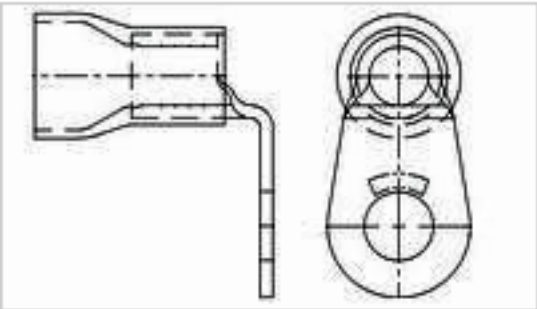

Active

Ring and Spade Tongue Terminals

TERMINAL R PG 4 AWG, 5/16, BENT 90

1958413-1

TE Internal Number: 1958413-1

Product Highlights View All

- Terminal Shape = Ring Tongue
- Receptacle Style = Bent 90 Degrees
- Body Style = PLASTI-GRIP
- Barrel Type = Closed Barrel
- Wire/Cable Type = Stranded

Pricing & Availability

Request Sample

Add to My Part List

Buy Product through Distributor

Documents | Features | Compliance

Please Note:
Use the Product Drawing for all design activity

Product Type Features

Receptacle Style	Bent 90 Degrees
Barrel Type	Closed Barrel
Wire/Cable Type	Stranded
Insulation	Yes
Insulation Support	Insulation Support
Stud Size	M8 [5/16]
Heavy Duty	No
Finish	Tin
Color	Yellow

Electrical Characteristics

Voltage (VAC)	600

Termination Features

Wire/Cable Size (CMA)	33,100 – 52,600

Dimensions

Insulation Diameter (mm [in])	13.08 [.515] Max.
Stud Diameter (mm [in])	8.33 [0.328]
Barrel I.D. Min. (mm [in])	13.08 [0.515]
Tongue Material Thickness (mm [in])	1.22 [0.048]
Width (mm [in])	17.25 [0.679]

Body Features

Body Style	PLASTI-GRIP
Wire Range (mm [AWG])	21.00² [4]
Material	Copper
Insulation Sleeve Material	PVC

Contact Features

Terminal Shape	Ring Tongue

Industry Standards

Government/Industry Qualification	No
RoHS/ELV Compliance	RoHS compliant, ELV compliant
Lead Free Solder Processes	Not relevant for lead free process
RoHS/ELV Compliance History	Always was RoHS compliant

Conditions for Usage

Temperature Range (°C)	105

Packaging Features

Packaging Method	Carton
Packaging Quantity	100

Other

Brand	AMP

Related Products

Not quite the product you're looking for?

Find Similar Products

View Part in Product Feature Selector

Check for Tooling

[-] Feedback

© 2014 TE Connectivity Ltd. family of companies. All Rights Reserved

Downloaded from Arrow.com.