MICRO SWITCH
FREEPORT ILLINOIS U.S.A.
A DIVISION OF HONEYWELL
FED. MFG. CODE 91929

SWITCH - ENCLOSED

CATALOG LISTING
21EN322-RB

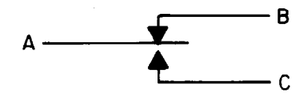

CIRCUIT DIAGRAM

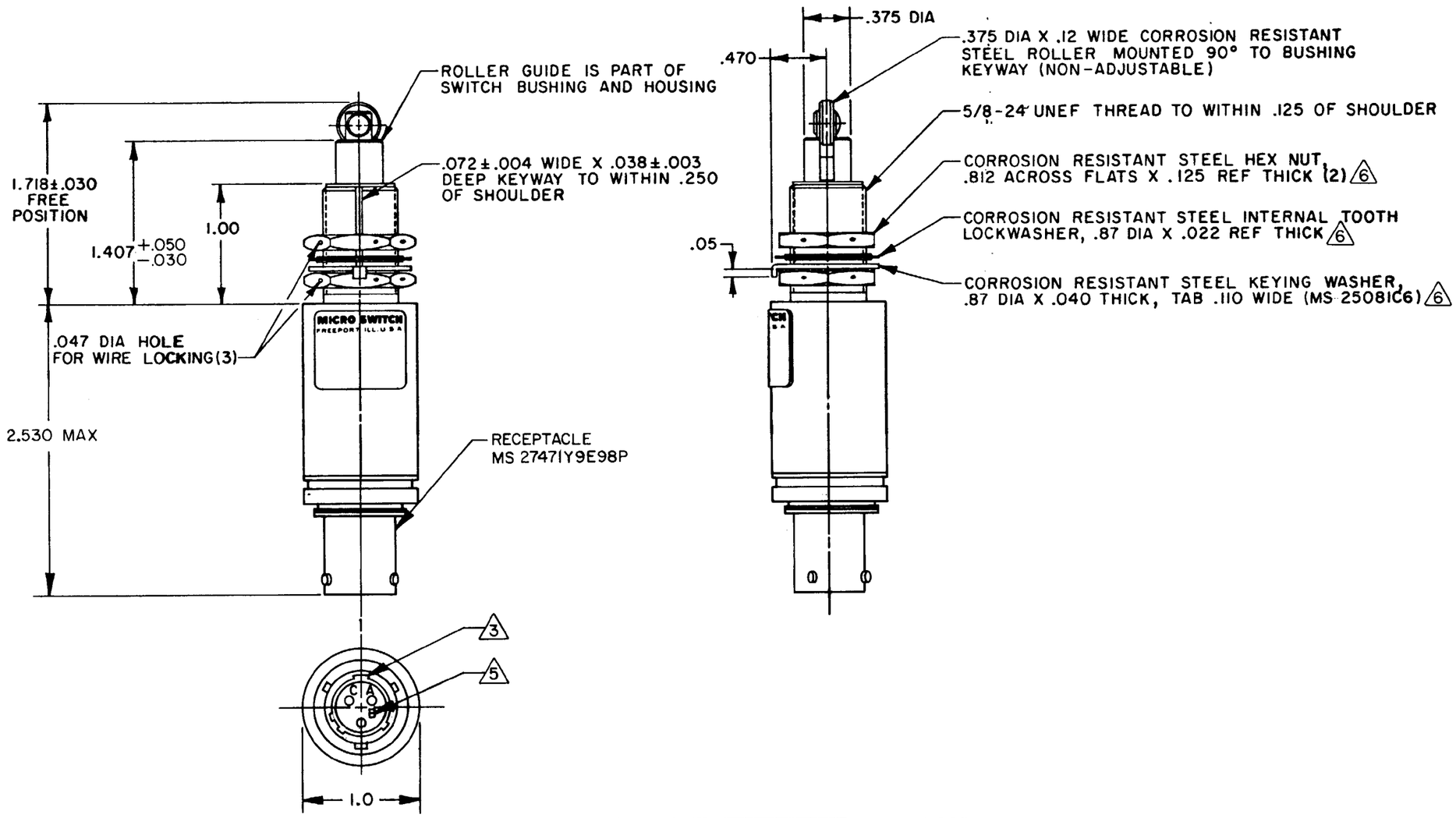

THIS DRAWING COVERS A PROPRIETARY ITEM AND IS THE PROPERTY OF MICRO SWITCH, A DIVISION OF HONEYWELL. THIS DRAWING IS NOT TO BE COPIED OR USED WITHOUT THE APPROVAL OF MICRO SWITCH.

THIRD ANGLE PROJECTION

SCALE FULL

DO NOT SCALE PRINT

TOLERANCES
APPLY TO DESIGN UNITS. CONVERSIONS ARE ONLY FOR REFERENCE. UNLESS NOTED, TOLERANCES ARE ±

	DIM. mm	TOL. mm/in	DIM. in	TOL. mm/in
NO PLACES	X	1/.04		
ONE PLACE	X.X	0.4/.016	X.X	0.8/.03
TWO PLACES	X.XX	0.15/.006	X.XX	0.38/.015
THREE PLACES			X.XXX	0.13/.005
ANGLES				

DESIGN UNITS SI METRIC ☐ US CUSTOMARY ■

RAW MATERIAL-COMMERCIAL STANDARD
MICRO SWITCH STANDARDS APPLY

DIMENSIONS ARE TO BE MET BEFORE PROTECTIVE COATINGS ARE APPLIED

WEIGHT 7 OZ MAX

CHARACTERISTICS

OPERATING FORCE	6-12 LB
FULL OVERTRAVEL FORCE	30 LB MAX
RELEASE FORCE	4 LB MIN
PRETRAVEL	.040 MAX
DIFFERENTIAL TRAVEL	.010 MAX
OVERTRAVEL	.250 MIN

ELECTRICAL DATA

CONTACT ARRANGEMENT
S P D T

LOAD	28 VDC SEA LEVEL	28 VDC 50,000 FT.
RES	4	4
IND	2	2
MOTOR	4	

NOTES
1 - CORROSION RESISTANT STEEL ENCLOSURE AND RECEPTACLE
2 - SWITCH SEALED PER MIL-PRF-8805 SYMBOL 4
3 - RECEPTACLE POLARIZING KEY POSITION
4 - CIRCUIT IDENTIFICATION AND CATALOG LISTING ARE SHOWN ON NAMEPLATE
5 - PIN LETTERS SHOWN FOR REFERENCE ONLY. THEY DO NOT NECESSARILY APPEAR ON RECEPTACLE
6 - HARDWARE MAY BE PACKAGED UNASSEMBLED PER MIL-PRF-8805

M 21EN322-RB
DRAWING NUMBER
ISSUE 10
RELEASE NO. PR-7984-T
REPLACES

REVISIONS
A REINST PR-7984-T J A P 30 JUL 79
B C047573 PART 4 R J H 18 AUG 80
C C053655 J A P 14 SEPT 83
D C0 77228 WES 22 DEC 93
E 0006683 TCC-AP 30 AUG 04
F 0040772 VSY 16JUN08

DRAWN J A P 30 JUL 79
CHECK GLH 8 AUG 79
CHECK CMH 16JUN08
CHECK
FO-52851-A

Downloaded from Arrow.com.