NOTE-1: "EYE OF THE NEEDLE"PRESS-FIT PIN TYPE
NOTE-2: CAVITIES FOR PLASTIC LATCH P/N HM13260 (DELIVERED SEPARATLY)
NOTE-3: FLAT ROCK INSERTION TOOLING PROCESS
NOTE-4: FULL SHIELDING SURFACE EXEPT WINDOWS FOR LATCH REMOVAL
NOTE-5: SPRING CONTACT BEAM OF SHIELDING PLATES
NOTE-6: LOCATION FOR MARKING, P/N AND DATE CODE
NOTE-7: NORMINATIVE REFERENCE = IEC-48B-595-NP (DRAFT)
NOTE-8: SHIELDING PLATES MATERIAL: STAINLESS COPPER ALLOY (ARCAP-AP1)

NOTE-9: INFORMATION ON LATCHING,SEE DRW C-8626-0877
NOTE-10: IF SUFFIX "P" IS ADDED IN P/N PACKAGING IS IN TRAYS BUT CONNECTOR MARKING IS WITHOUT "P" EXAMPLE: HM1XXXXXXXXXH6P, MARKED HM1XXXXXXXXXH6
NOTE-12 WINDOW ON SHIELD TO GO INTO THE LATCH CAVITY FOR REMOVAL PROCESS (USE ANOTHER LATCH AS REMOVAL TOOL)
NOTE-13 REMOVE THE LATCH FROM THE FRONT SIDE WITH TOOL P/N: HM15013 SEE DRW: C-8626-0314/0316

GENERAL CHARACTERISTICS AND ROHS INFORMATIONS:
SEE PRODUCT SPECIFICATION GS-12-445

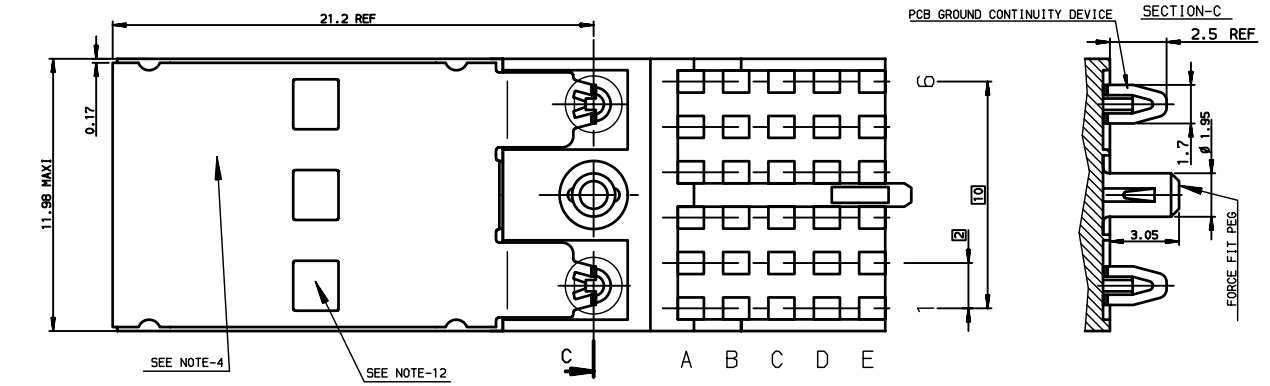

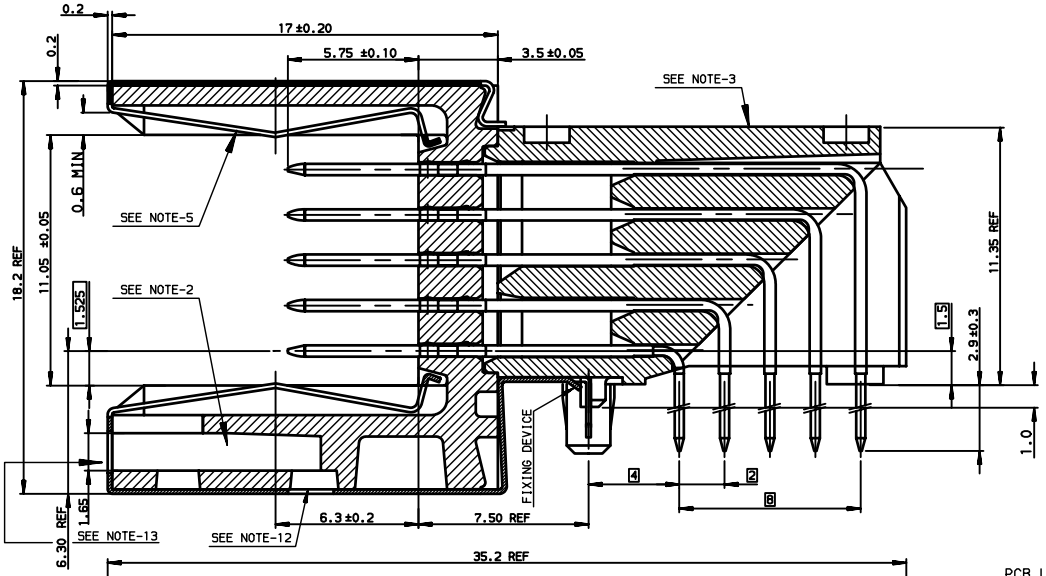

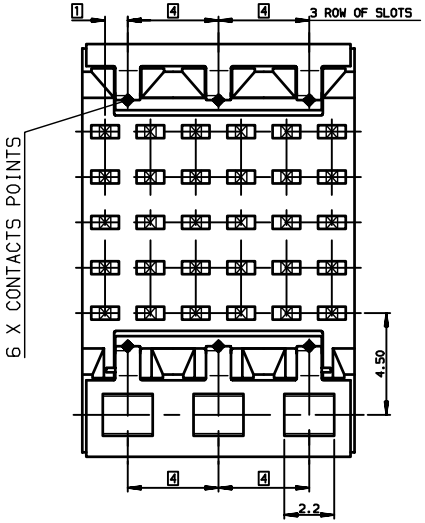

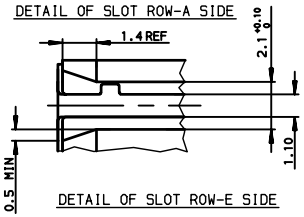

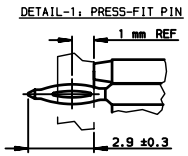

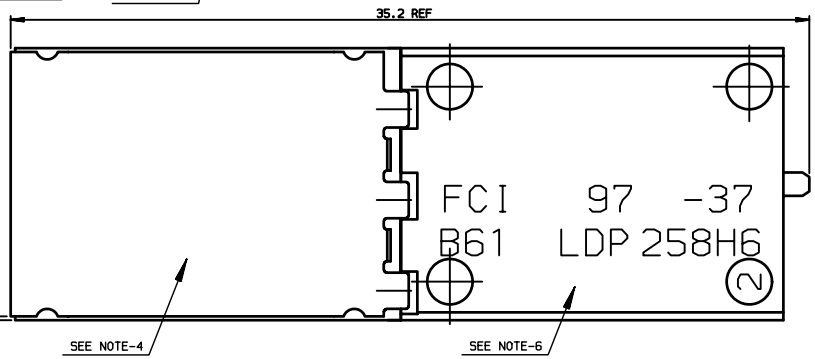

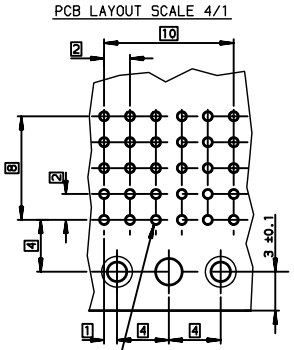

Hole according to product spec
GS-12-445 (for press-fit) ,
GS-12-446 (for STB)

TIN LEAD PART NUMBER
Part Number: HM1B61LDP258H6P

LEAD-FREE PART NUMBER
Part Number: HM1B61LDP258H6PLF

rev	ecn no	dr	date
C	-	ETI	2000/09/19
D	LS05-004	MLE	2005/02/18
E	LS06-0095	LGO	2006/07/12
F	LS07-0184	MLE	2007/07/24
G	LS09-0038	MLE	2009/01/29
-	-	-	-
-	-	-	-

European Views

www.fciconnect.com

surface ISO 1302		tolerance std ISO 406 ISO 1101		projection	mm
TOLERANCES UNLESS OTHERWISE SPECIFIED					
Dr	CHAMPION	1997/12/18	ANGULAR	LINEAR 0.X ±0.1	size A2 / Scale 6
Eng	LENOIR	1997/12/18		0.XX ±0.1	
Chr	LEGARE	1997/12/18	0.XX° ±2°	0.XXX ±0.1	ECN LS09-0038
Appr	LEGARE	1997/12/18	Product family	METRAL	Spec ref -

title: METRAL HDR RA 30POS.
SHIELDED version -Short top shield
catalog no -
dwg no C-8626-0876
Rev. G
CUSTOMER
sheet 1 of 1

Copyright FCI.

Downloaded from Arrow.com.

PDM: Rev:G STATUS: Released Printed: May 19, 2011