SERIES: PRC40 | **DESCRIPTION:** DC-DC CONVERTER

FEATURES

- up to 40W continuous power
- single and dual regulated outputs
- 4:1 input range, 9~36 Vdc and 18~75 Vdc input voltage options
- certified to EN/IEC 62368-1
- wide operating temperature range (-40 ~ +105°C)
- short circuit, over current, over temperature, and over voltage protection
- remote ON/OFF, output voltage trim

MODEL

MODEL	input voltage		output voltage	output current[1]	output power	ripple & noise[2]	efficiency[3]
	typ (Vdc)	range (Vdc)	(Vdc)	max (mA)	max (W)	max (mVp-p)	typ (%)
PRC40-24-S3	24	9 ~ 36	3.3	10,000	33	100	89
PRC40-24-S5	24	9 ~ 36	5	8,000	40	100	90
PRC40-24-S12	24	9 ~ 36	12	3,333	40	125	92
PRC40-24-S15	24	9 ~ 36	15	2,666	40	125	92
PRC40-24-D12	24	9 ~ 36	±12	±1,666	40	125	90
PRC40-24-D15	24	9 ~ 36	±15	±1,333	40	125	90
PRC40-24-D24	24	9 ~ 36	±24	±833	40	200	91
PRC40-48-S3	48	18 ~ 75	3.3	10,000	33	100	89
PRC40-48-S5	48	18 ~ 75	5	8,000	40	100	90
PRC40-48-S12	48	18 ~ 75	12	3,333	40	125	92
PRC40-48-S15	48	18 ~ 75	15	2,666	40	125	92
PRC40-48-D12	48	18 ~ 75	±12	±1,666	40	125	90
PRC40-48-D15	48	18 ~ 75	±15	±1,333	40	125	90
PRC40-48-D24	48	18 ~ 75	±24	±833	40	200	90

Notes:
1. At full load.
2. Measured with 20MHz bandwidth and 1μF ceramic capacitor.
3. The efficiency is test by nominal input and full load at 25°C.

PART NUMBER KEY

PRC40 - XX - X XX

- PRC40: Base Number
- XX: Input Voltage
- X: Output
  - S = single
  - D = dual
- XX: Output Voltage

Please read our datasheet & drawing disclaimer here.

Downloaded from Arrow.com.

INPUT

parameter	conditions/description	min	typ	max	units
operating input voltage	24 Vdc input 48 Vdc input	9 18	24 48	36 75	Vdc Vdc
surge voltage	24 Vdc input 48 Vdc input			50 100	Vdc Vdc
input undervoltage lockout	0% ~ 100% load 24 Vdc input 48 Vdc input		 8 16		 Vdc Vdc
no load input current	at nominal input voltage			15	mA
input filter	Pi filter				
start-up time	at nominal input, full load			40	ms
start-up voltage	0% ~ 100% load 24 Vdc input 48 Vdc input			 9 18	 Vdc Vdc
remote ON/OFF	module on: CTRL pin open or pulled high (3~12 Vdc) module off: CTRL pin pulled low to GND (0~1.2 Vdc)				

OUTPUT

parameter	conditions/description	min	typ	max	units
maximum capacitive load	3.3 Vdc output 5 Vdc output 12 Vdc output 15 Vdc output ±12 Vdc output ±15 Vdc output ±24 Vdc output			26,600 20,000 3,900 2,600 ±2,600 ±1,600 ±650	µF µF µF µF µF µF µF
voltage accuracy	at full load, nominal input		±1		%
voltage adjustability			±10		%
line regulation	low line to high line at full load single output dual output		 ±0.2 ±0.5		 % %
load regulation	0% ~ 100% load single output dual output		 ±0.5 ±1		 % %
cross regulation	25% ~ 100%, dual output models		±5		%
operating frequency	at full load, nominal input	220	250	285	kHz
transient recovery time	75% to 100% load step change		500		µs
temperature coefficient		-0.05		±0.05	%/°C

PROTECTIONS

parameter	conditions/description	min	typ	max	units
over voltage protection	zener diode clamp	112		160	%
over current protection			175		%
short circuit protection	continuous, auto recovery				
over temperature protection			115		°C

SAFETY AND COMPLIANCE

parameter	conditions/description	min	typ	max	units
isolation voltage	input to output, for 1 minute	1,600			Vdc
isolation resistance		1,000			MΩ
isolation capacitance			1,500		pF
safety approvals	certified to 62368-1: EN, BS EN				

Downloaded from Arrow.com.

SAFETY AND COMPLIANCE (CONTINUED)

parameter	conditions/description	min	typ	max	units
EMI	EN 55032 Class A, Class B (external circuit required, see Figure 3)				
ESD	EN 61000-4-2, Air ± 8kV, Contact ± 6kV, perf. Criteria A				
fast transient[4]	EN 61000-4-4, ±2kV, perf. Criteria A				
surge[4]	EN 61000-4-5, ±2kV, perf. Criteria A				
conducted immunity	EN 61000-4-6, 10 Vrms, perf. Criteria A				
magnetic field immunity	EN 61000-4-8, 10 A/m, perf. Criteria A				
MTBF	as per MIL-HDBK-217F, 25°C		779,000		hours
RoHS	yes				

Notes: 4. External 680µF/100V capacitor required.

ENVIRONMENTAL

parameter	conditions/description	min	typ	max	units
operating temperature	see derating curve	-40		105	°C
storage temperature		-55		125	°C
humidity	non-condensing	5		95	%
max. case temperature				110	°C

MECHANICAL

parameter	conditions/description	min	typ	max	units
dimensions	50.80 x 25.40 x 10.50				mm
weight			37.6		g
case material	metal case				
potting material	silicone (UL94V-0)				

Downloaded from Arrow.com.

MECHANICAL DRAWING

units: inch [mm]
general tolerance: ±0.35mm

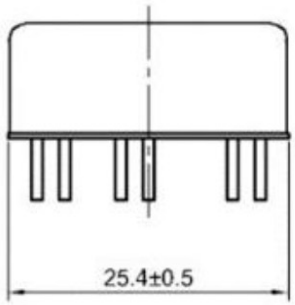

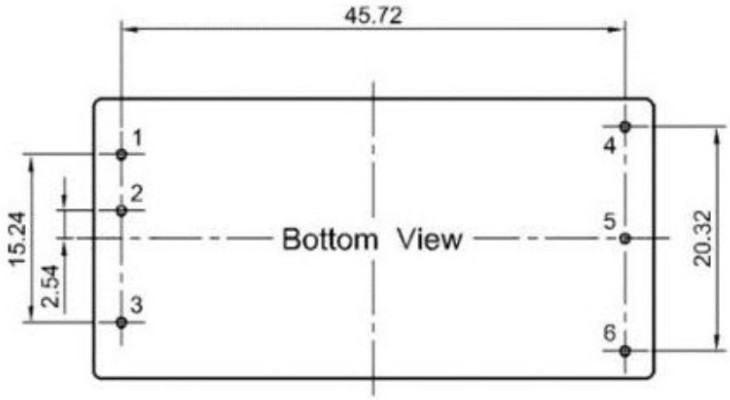

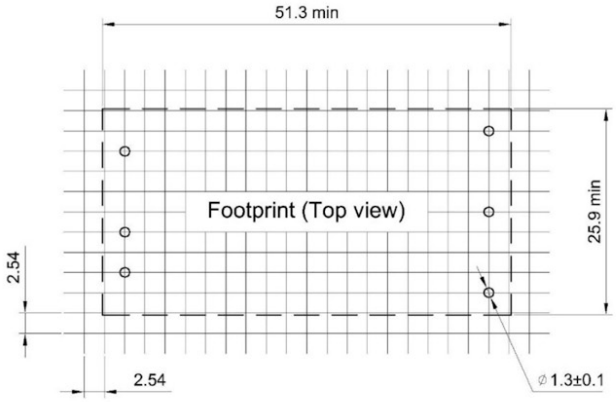

Pin Out		
PIN	Single outputs	Dual outputs
1	+Vin	+Vin
2	-Vin	-Vin
3	CTRL	CTRL
4	+Vout	+Vout
5	-Vout	0V
6	Trim	-Vout

Downloaded from Arrow.com.

DERATING CURVES

TEMPERATURE DERATING CURVE (PRC40-24-S3)

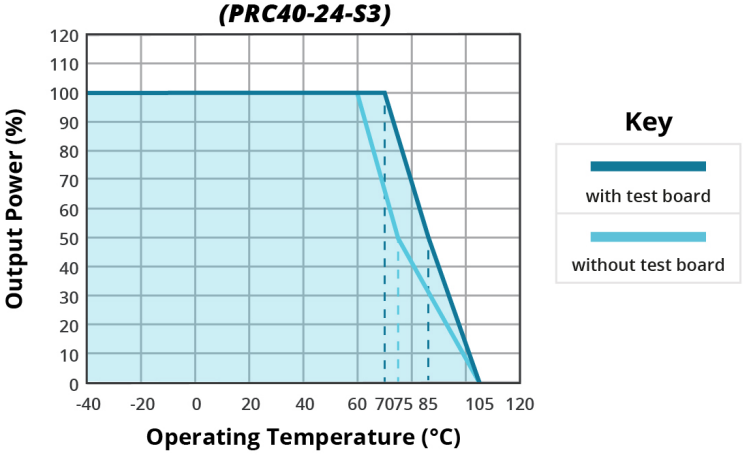

TEMPERATURE DERATING CURVE (PRC40-24-S5)

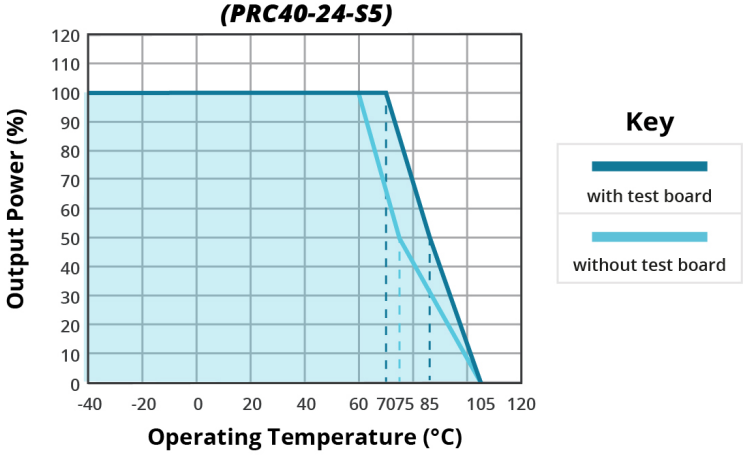

TEMPERATURE DERATING CURVE (PRC40-24-S12)

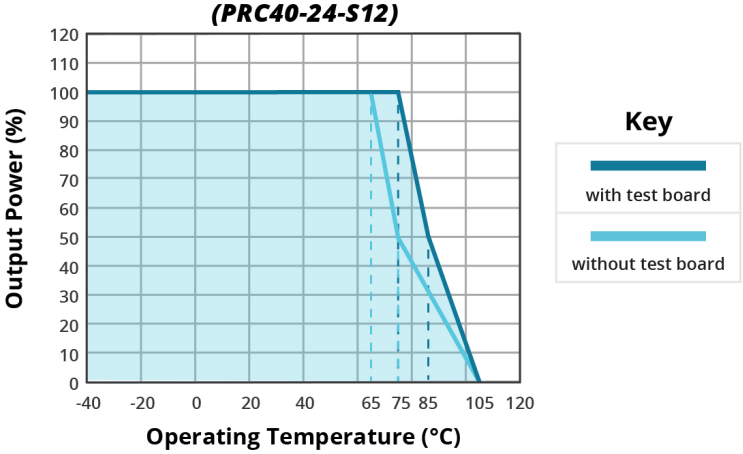

TEMPERATURE DERATING CURVE (PRC40-24-S15)

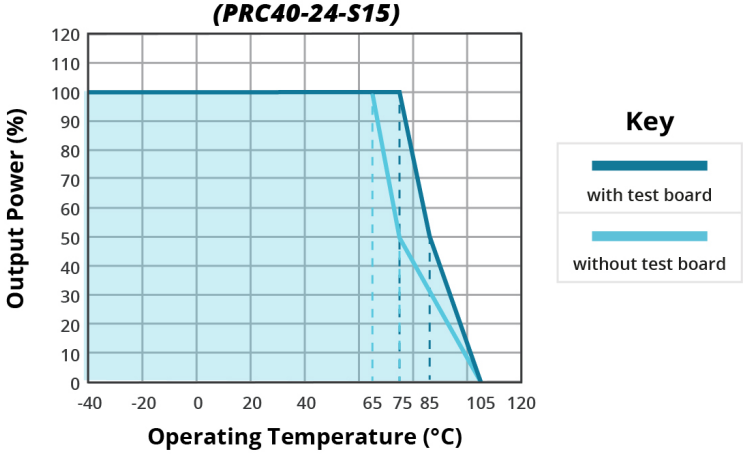

TEMPERATURE DERATING CURVE (PRC40-24-D12)

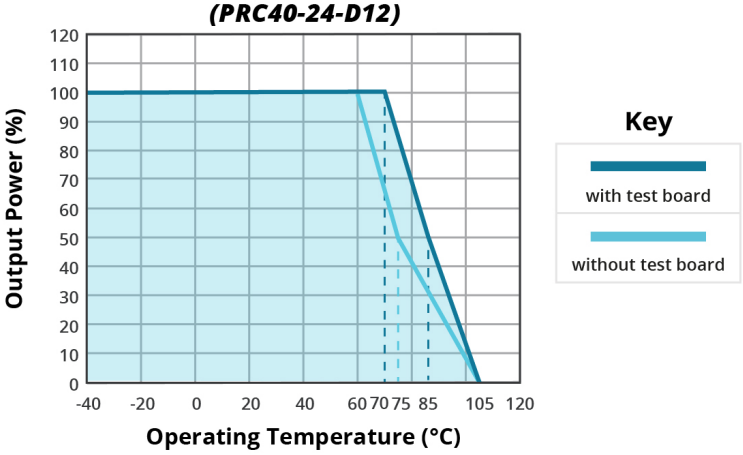

TEMPERATURE DERATING CURVE (PRC40-24-D15)

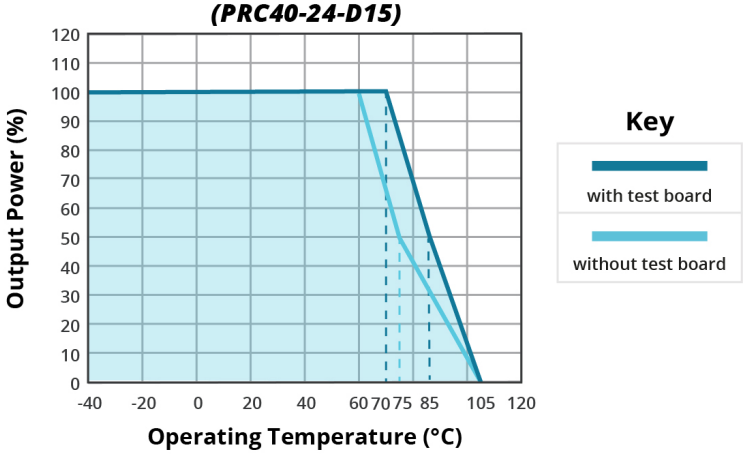

Downloaded from Arrow.com.

DERATING CURVES (CONTINUED)

TEMPERATURE DERATING CURVE (PRC40-48-S3)

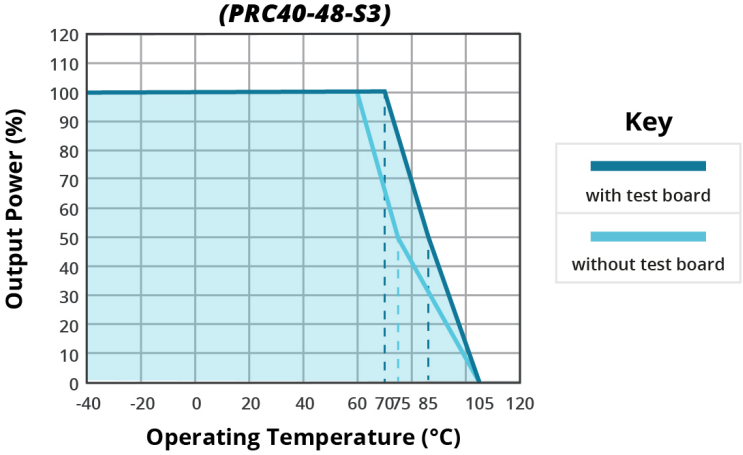

TEMPERATURE DERATING CURVE (PRC40-48-S5)

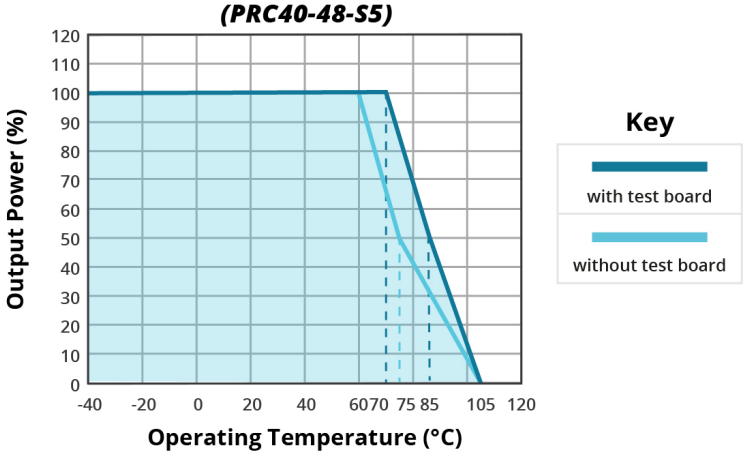

TEMPERATURE DERATING CURVE (PRC40-48-S12)

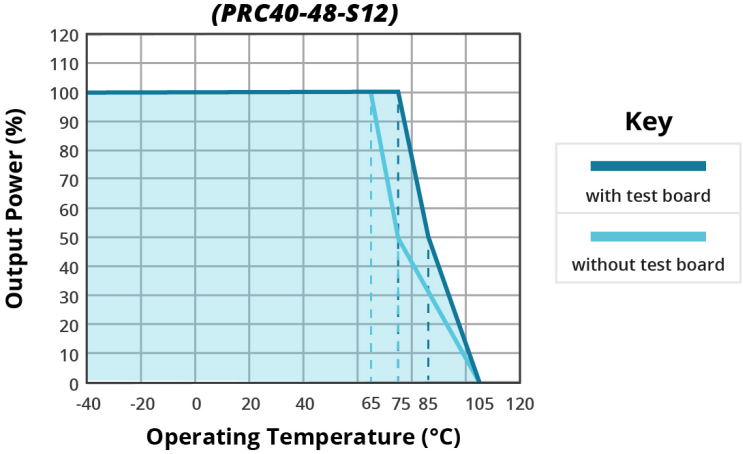

TEMPERATURE DERATING CURVE (PRC40-48-S15)

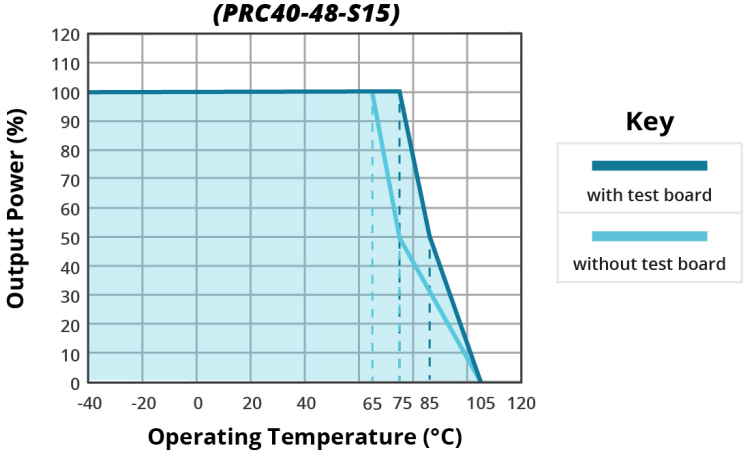

TEMPERATURE DERATING CURVE (PRC40-48-D12)

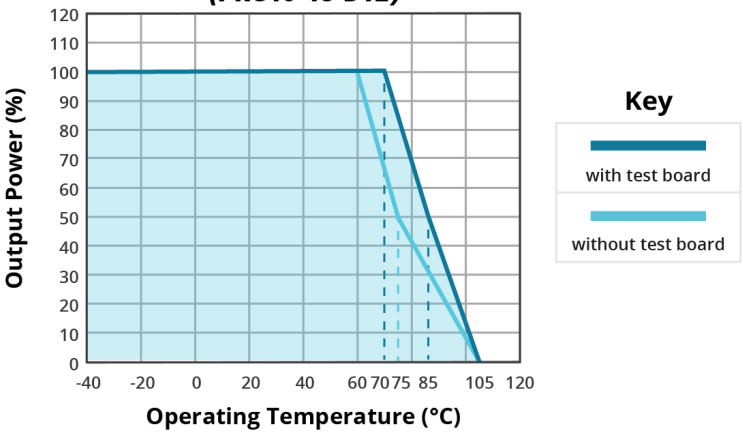

TEMPERATURE DERATING CURVE (PRC40-48-D15)

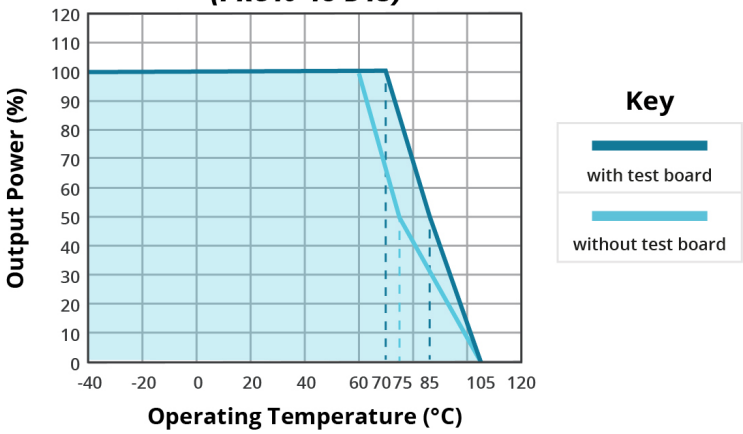

Note: The derating curve was measured at nominal Vin in chamber with nature convection.
The derating curve was measured with nominal line. Mounted test board 90 x 80 mm and each power pin with 43 x 40 mm, 2oz double layer.

Downloaded from Arrow.com.

RIPPLE AND NOISE MEASURE METHOD

Figure 1

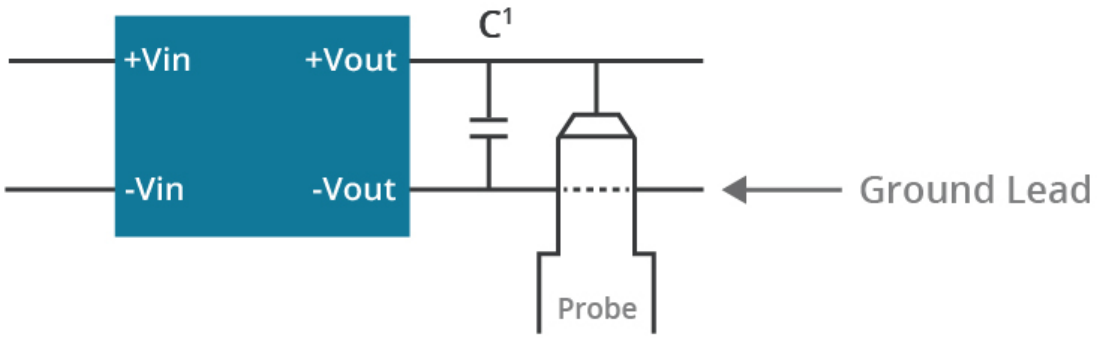

Note: 1. Measured with 20MHz bandwidth and 1μF ceramic capacitor.

EMI RECOMMENDED CIRCUIT

Figure 2

EN55032 CLASS A

Figure 3

Single output
EN55032 CLASS B

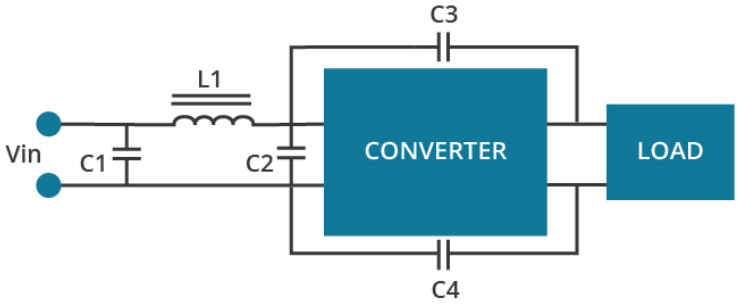

Dual output
EN55032 CLASS B

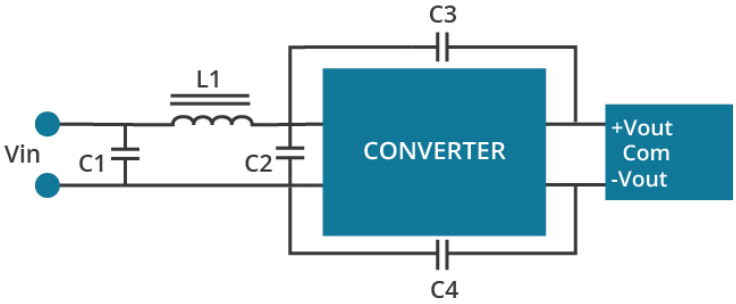

Table 2

Vin	C1	L1	C2	C3	C4
24V	10μF	1.5μH	10μF	2200pF	2200pF
48V	10μF	3.3μH	4.7μF	2200pF	2200pF

Downloaded from Arrow.com.

APPLICATION NOTES

Figure 4

Trim up

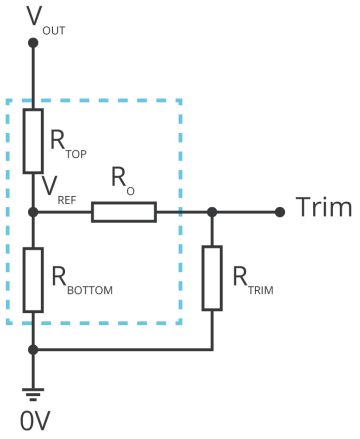

Trim down

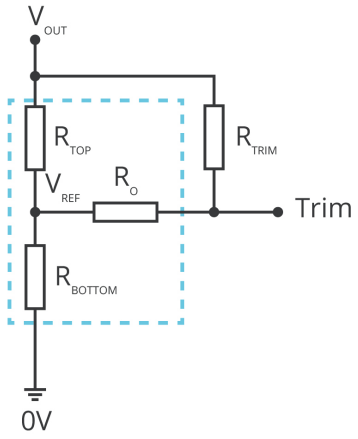

$$R_{TRIM} = \frac{a \cdot R_{BOTTOM}}{R_{BOTTOM} - a} - R_O \qquad a = \frac{V_{REF}}{V_{OUT} - V_{REF}} \cdot R_{TOP}$$

Formula for Trim up

$$R_{TRIM} = \frac{a \cdot R_{TOP}}{R_{TOP} - a} - R_O \qquad a = \frac{V_{OUT} - V_{REF}}{V_{REF}} \cdot R_{BOTTOM}$$

Formula for Trim down

Table 3

V_{NOM}	R_{TOP}	R_{BOTTOM}	R_O	V_{REF}
(Vdc)	(kΩ)	(kΩ)	(kΩ)	(V)
3.3	8.5	5.1	27	1.24
5	15.47	5.1	33	1.24
12	12.62	3.3	22	2.50
15	15.1	3	22	2.50

Note: Value for R_{TOP}, R_{BOTTOM}, R_O, and V_{REF} refer to Table 3 (fixed internal values).
R_{TRIM}: Trim resistance
a: User-defined parameter, no actual meanings
V_{NOM}: Nominal output voltage
V_{OUT}: Target output voltage

Downloaded from Arrow.com.

REVISION HISTORY

rev.	description	date
1.0	initial release	06/15/2023
1.01	company address updated	11/13/2024

The revision history provided is for informational purposes only and is believed to be accurate.

CUI INC
a bel group

Headquarters
15575 SW Sequoia Pkwy #100
Portland, OR 97224
800.275.4899

Fax 503.612.2383
cui.com
techsupport@cui.com

CUI offers a two (2) year limited warranty. Complete warranty information is listed on our website.

CUI reserves the right to make changes to the product at any time without notice. Information provided by CUI is believed to be accurate and reliable. However, no responsibility is assumed by CUI for its use, nor for any infringements of patents or other rights of third parties which may result from its use.

CUI products are not authorized or warranted for use as critical components in equipment that requires an extremely high level of reliability. A critical component is any component of a life support device or system whose failure to perform can be reasonably expected to cause the failure of the life support device or system, or to affect its safety or effectiveness.

Downloaded from Arrow.com.