MICRO SWITCH
FREEPORT ILLINOIS, U.S.A
A DIVISION OF HONEYWELL INC.
FED. MFG. CODE 91929

SWITCH - BASIC

CATALOG LISTING
V3-3059
CK-X3565

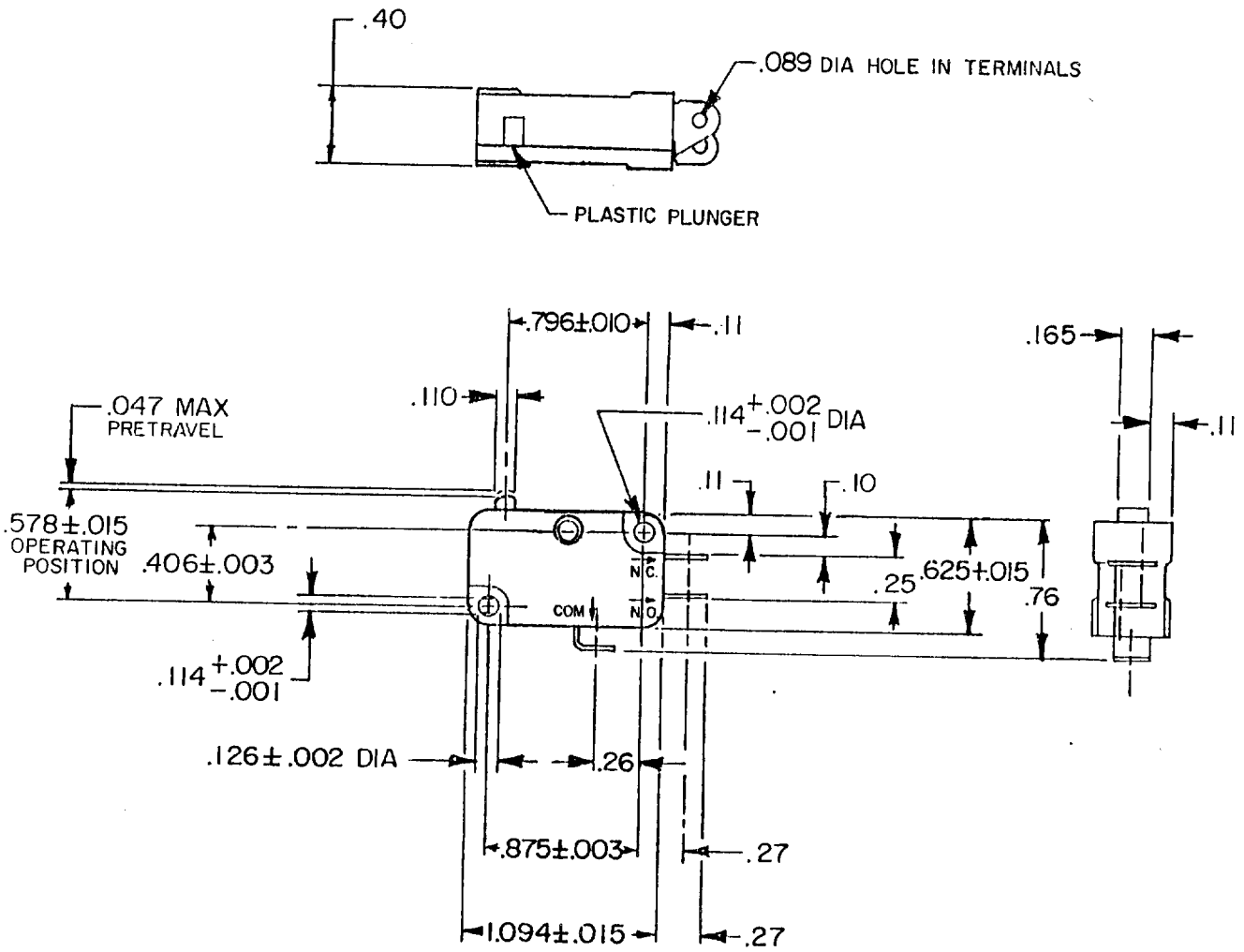

NOTE
1 TERMINALS ARE PLATED FOR SOLDERING

V3-3059
RELEASE NO. PR-15040
REPLACES
DRAWING NUMBER
ISSUE X2
CHECK

REVISIONS
A C074212 D H D 20 JAN 93

THIS DRAWING COVERS A PROPRIETARY ITEM AND IS THE PROPERTY OF MICRO SWITCH, A DIVISION OF HONEYWELL. THIS DRAWING IS NOT TO BE COPIED OR USED WITHOUT THE APPROVAL OF MICRO SWITCH.

THIRD ANGLE PROJECTION

CHARACTERISTICS

OPERATING FORCE — — — 150 GRAM MAX
RELEASE FORCE — — — — 15 GRAM MIN
DIFFERENTIAL TRAVEL — — — — .002-.010
OVERTRAVEL — — — — — — — — .050 MIN
FREE POSITION — — — — — — — — .625 MAX
RELEASE TRAVEL — — — — — — — — .010 MIN

ELECTRICAL DATA

CONTACT ARRANGEMENT
S P D T

L83
15.1A 1/2HP 125 OR 250 VAC
1/2A 125 VDC, 1/4A 250 VDC
5A 125 VAC "L"

SCALE FULL — DO NOT SCALE PRINT

UNLESS OTHERWISE SPECIFIED TOLERANCES ARE

ONE PLACE	(.0)	± .030
TWO PLACE	(.00)	± .015
THREE PLACE	(.000)	± .005
ANGLES		±

RAW MATERIAL — COMMERCIAL STANDARD
DIMENSIONS ARE IN INCHES AND ARE TO BE MET BEFORE PROTECTIVE COATINGS ARE APPLIED
MICRO SWITCH STANDARDS APPLY

WEIGHT .016 LB

DRAWN T A D 18 SEP 86 CHECK

FO-5284R-B

Downloaded from Arrow.com.